1 REVISED

1

I-49 OPTIONAL PAVEMENT
10" NON-REINFORCED PCCP
4" TYPE 5 AGGREGATE BASE

OR

1.75" SP125 (PG70-22)
3" SP250 (PG70-22)
8.25" SP250 (PG64-22)
4" TYPE 5 AGGREGATE BASE

EXTEND FULL DEPTH PAVEMENT
MIN. 2' BEYOND TRAVELWAY

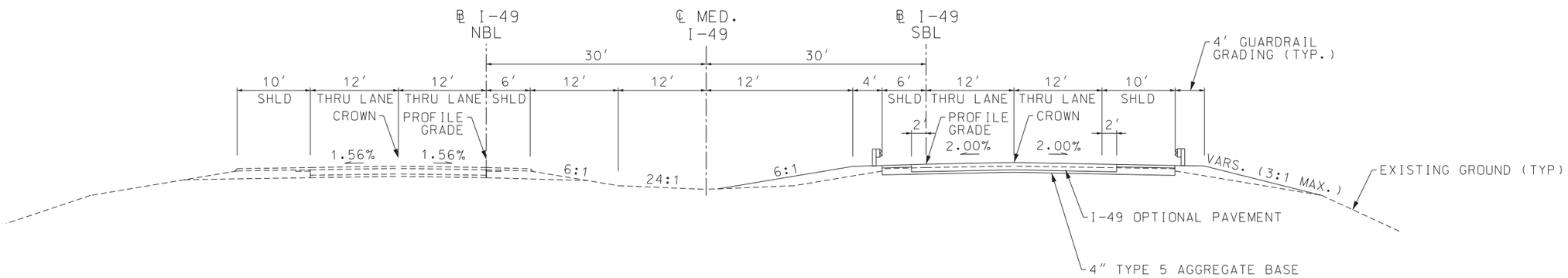

PROPOSED SECTION ON TANGENT

TYPICAL SECTION I-49

STA. 993+80.75 TO STA. 1009+80.75
BRIDGE EXCEPTION STA. 1000+21.82 - 1002+85.18
BRIDGE APPROACH SLAB (MAJOR) STA. 1000+02.53 - 1000+22.53
AND STA. 1002+84.47 - 1003+04.47
CONCRETE APPROACH PAVEMENT STA. 999+53.53 - 1002+02.53
AND STA. 1003+04.47 - 1003+25.47

NOTE:
BRIDGE, BRIDGE APPROACH SLAB
AND CONCRETE APPROACH PAVEMENT
STATIONING BASED ON ℄ I-49 SBL.

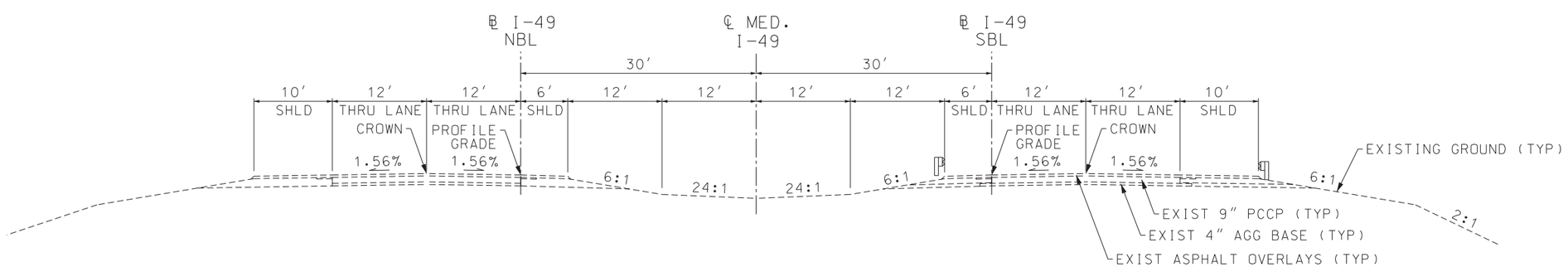

EXISTING SECTION ON TANGENT

TYPICAL SECTION I-49

STA. 993+80.75 TO STA. 1009+80.75
BRIDGE EXCEPTION STA. 1000+43.25 - 1002+34.25

TYPICAL SECTIONS
I-49
SHEET 1 OF 2

STATE OF MISSOURI
EARL HARRISON, JR.
NUMBER
E-2003019813
REGISTERED PROFESSIONAL ENGINEER

THIS SHEET HAS BEEN SIGNED, SEALED AND DATED ELECTRONICALLY.

DATE PREPARED	
10/9/2020	
ROUTE	STATE
I-49	MO
DISTRICT	SHEET NO.
SW	2
COUNTY	
VERNON	
JOB NO.	
J7I3363	
CONTRACT ID.	
PROJECT NO.	
BRIDGE NO.	

DATE	DESCRIPTION
10/09/20	1 PAVEMENT TYPE SELECTION

MISSOURI HIGHWAYS AND TRANSPORTATION COMMISSION
105 WEST CAPITOL
JEFFERSON CITY, MO 65102
1-888-ASK-MODOT (1-888-275-6636)

Hg Consult Inc engineers planners

Hg CONSULT, INC.
PRO. ENGINEER 2010005873

EARL HARRISON, JR.
PROFESSIONAL ENGINEER
E-2003019813

REV.

TEMP. CROSSOVER OPTIONAL PAVEMENT
7.5" JPCP
ROCK BASE, 12" MIN THICKNESS

OR

9" BITUMINOUS PAVEMENT
ROCK BASE, 12" MIN THICKNESS

1 REVISED

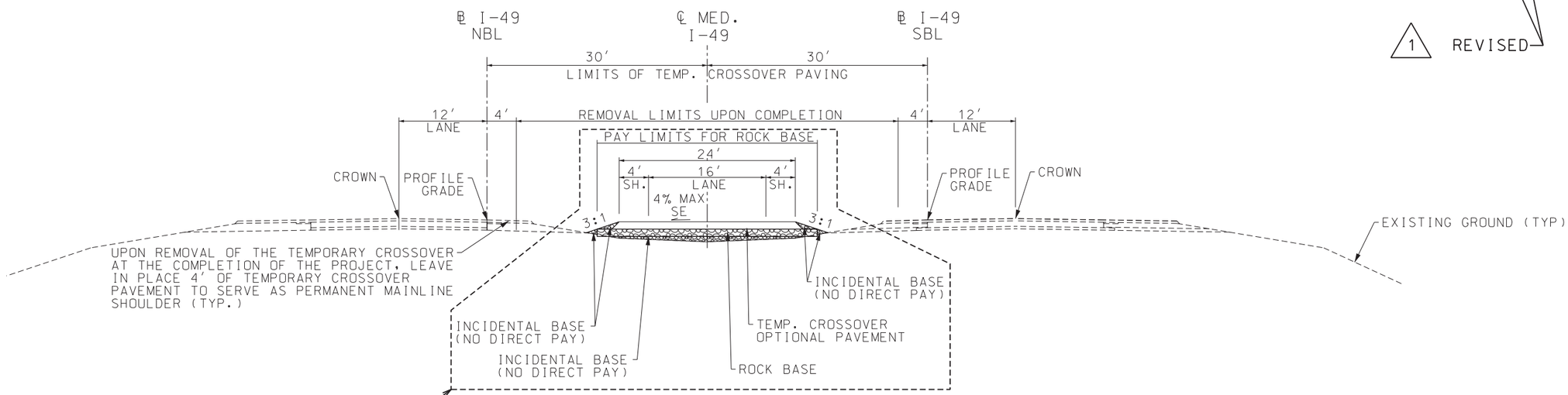

1 REVISED

TYPICAL SECTION
PROPOSED TEMPORARY MEDIAN CROSSOVERS
I-49 SB TRAFFIC (ONE LANE)
(SEE PLANS FOR LOCATIONS & ADDITIONAL DETAILS)

TYPICAL SECTIONS
I-49
SHEET 2 OF 2

STATE OF MISSOURI
EARL HARRISON, JR.
NUMBER
E-2003019813
REGISTERED PROFESSIONAL ENGINEER

THIS SHEET HAS BEEN SIGNED, SEALED AND DATED ELECTRONICALLY.

DATE PREPARED	
10/9/2020	
ROUTE	STATE
I-49	MO
DISTRICT	SHEET NO.
SW	2
COUNTY	
VERNON	
JOB NO.	
J7I3363	
CONTRACT ID.	
PROJECT NO.	
BRIDGE NO.	

DATE	DESCRIPTION
10/09/20	1 REVISE ROCK BASE

MISSOURI HIGHWAYS AND TRANSPORTATION COMMISSION
105 WEST CAPITOL
JEFFERSON CITY, MO 65102
1-888-ASK-MODOT (1-888-275-6636)

Hg Consult inc engineers planners

Hg CONSULT, INC.
PRO. ENGINEER 2010005873

EARL HARRISON, JR.
PROFESSIONAL
ENGINEER
E-2003019813

REV.

G:\My Drive\Hg Projects\2018\18.077 Vernon County Bridge (HW LOCHNER)\Civil\Sheet_Files\TypicalSections\002_TS_02_J7I3363_i10_I49_R001.dgn 11:11:18 AM 10/9/2020

MISSOURI HIGHWAYS AND TRANSPORTATION COMMISSION

SUMMARY OF QUANTITIES

1 REVISED

REMOVAL OF IMPROVEMENTS

FROM STATION	TO STATION	LOCATION	DESCRIPTION	APPROX. QTY.	UNITS	REMARKS
952+52	956+26	I-49 SB MEDIAN	EX. SHOULDER	160	SQ. YD.	FOR CONSTRUCTION OF TEMP. CROSSOVER
957+91	961+60	I-49 NB MEDIAN	EX. SHOULDER	164	SQ. YD.	FOR CONSTRUCTION OF TEMP. CROSSOVER
952+52	961+60	I-49 MEDIAN	TEMP. CROSSOVER PAVEMENT	1135	SQ. YD.	REMOVE UPON COMPLETION OF PROJECT
1055+00	1058+63	I-49 NB MEDIAN	EX. SHOULDER	161	SQ. YD.	FOR CONSTRUCTION OF TEMP. CROSSOVER
1060+41	1064+08	I-49 SB MEDIAN	EX. SHOULDER	163	SQ. YD.	FOR CONSTRUCTION OF TEMP. CROSSOVER
1055+00	1064+08	I-49 MEDIAN	TEMP. CROSSOVER PAVEMENT	1221	SQ. YD.	REMOVE UPON COMPLETION OF PROJECT
993+80.75	1000+54	I-49 SB MEDIAN	EX. SHOULDER	358	SQ. YD.	
993+80.75	1000+30	I-49 SB OUTSIDE	EX. SHOULDER	555	SQ. YD.	
993+80.75	1000+54	I-49 SB	EX. MAINLINE PAVEMENT	1830	SQ. YD.	
1002+49	1009+80.75	I-49 SB MEDIAN	EX. SHOULDER	317	SQ. YD.	
1002+23	1009+80.75	I-49 SB OUTSIDE	EX. SHOULDER	782	SQ. YD.	
1002+23	1009+80.75	I-49 SB	EX. MAINLINE PAVEMENT	2095	SQ. YD.	
992+77	1000+59	I-49 SB MEDIAN	EX. GUARDRAIL	782	LN. FT.	NE BRIDGE A1343 END
996+72	1000+27	I-49 SB OUTSIDE	EX. GUARDRAIL	355	LN. FT.	NW BRIDGE A1343 END
1000+35	1000+55	I-49 SB MEDIAN	EX. TYPE A CURB & CONC.	20	LN. FT.	NE BRIDGE A1343 END
1000+07	1000+27	I-49 SB OUTSIDE	EX. TYPE A CURB & CONC.	20	LN. FT.	NW BRIDGE A1343 END
1002+22	1002+42	I-49 SB MEDIAN	EX. TYPE A CURB & CONC.	20	LN. FT.	SE BRIDGE A1343 END
1002+51	1002+71	I-49 SB OUTSIDE	EX. TYPE A CURB & CONC.	20	LN. FT.	SW BRIDGE A1343 END
952+52	961+60	I-49 MEDIAN	TEMP. CROSSOVER ROCK BASE	1928 (1)	SQ. YD.	REMOVE UPON COMPLETION OF PROJECT
1055+00	1064+08	I-49 MEDIAN	TEMP. CROSSOVER ROCK BASE	1914 (1)	SQ. YD.	REMOVE UPON COMPLETION OF PROJECT
			LUMP SUM	1		

(1) INCLUDES INCIDENTAL ROCK BASE

1

MOBILIZATION

LUMP SUM = 1

CONTRACTOR FURNISHED SURVEYING AND STAKING

LUMP SUM = 1

ADDITIONAL MOBIL. FOR SEEDING

1 EACH

TYPE A CURB

FROM STATION	TO STATION	LOCATION	CURB (FT)	REMARKS
999+38.98	999+75.82	I-49 SB LANE	36.83	NW CORNER
999+78.98	1000+15.82	I-49 SB LANE	36.83	NE CORNER
1002+63.18	1003+00.02	I-49 SB LANE	36.83	SW CORNER
1003+03.18	1003+40.02	I-49 SB LANE	36.83	SE CORNER
		SUBTOTAL	147.32	
		TOTAL	148	

SHAPING SLOPES, CLASS III

LOCATION	QUANTITY (STA.)	REMARKS
~~I-49 SB~~	~~1~~	~~NW CORNER OF SB BRIDGE MASH END TERMINAL~~
~~I-49 SB~~	~~1~~	~~NE CORNER OF SB BRIDGE MASH END TERMINAL~~
I-49 NB	1	NW CORNER OF NB BRIDGE MASH END TERMINAL
I-49 NB	1	NE CORNER OF NB BRIDGE MASH END TERMINAL
TOTAL	~~4~~ 2	

1

EARTHWORK

FROM STATION	TO STATION	LOCATION	CLASS A EXCAVATION (CY)	COMPACTING EMBANKMENT (CY)	EXCESS CLASS A (1) (CY)	REMARKS
993+80.75	1009+80.75	I-49 SB	~~1~~ 16	~~2894~~ 2611		BRIDGE EXCEPTION STA. 1000+21.82 TO 1002+85.18
1000+21.82	RR	I-49 SB	2680	152		NORTH BRIDGE END
RR	1002+85.18	I-49 SB	2486	112	~~1148~~ 1443	SOUTH BRIDGE END
		TOTALS	~~5167~~ 5182	~~3158~~ 2875	~~1148~~ 1443	

(1) FOR INFORMATION ONLY

1

LINEAR GRADING TYPE 2

FROM STATION	TO STATION	LOCATION	QUANTITY (STA)	REMARKS
0+00.00	9+12.26	NORTH TEMP. CROSSOVER	9.1	INSTALL NORTH TEMP. CROSSOVER
0+00.00	9+12.26	NORTH TEMP. CROSSOVER	9.1	REMOVE NORTH TEMP. CROSSOVER
0+00.00	9+11.74	SOUTH TEMP. CROSSOVER	9.1	INSTALL SOUTH TEMP. CROSSOVER
0+00.00	9+11.74	SOUTH TEMP. CROSSOVER	9.1	REMOVE SOUTH TEMP. CROSSOVER
		TOTAL	36.4	

OPTIONAL PAVEMENT AND BASE

			I-49 MAINLINE	TEMPORARY CROSSOVERS		I-49 MAINLINE	TEMP. X-OVERS		
FROM STATION	TO STATION	LOCATION	OPTIONAL PAVEMENT (SQ YD)	OPTIONAL PAVEMENT (SQ YD)	A2 SHOULDER (SQ YD)	4" TYPE 5 AGGREGATE BASE (SQ YD)	FURNISHING ROCK BASE (SQ YD)	PLACING ROCK BASE (SQ YD)	REMARKS
993+80.75	999+53.53	I-49 SB LANE	1782		764	2546			
1003+25.47	1009+80.75	I-49 SB LANE	2058		883	2941			
0+00.00	9+12.26	NORTH TEMP. CROSSOVER		1680			1928	~~1680~~ 1928	
0+00.00	9+11.74	SOUTH TEMP. CROSSOVER		1646			1914	~~1646~~ 1914	
		SUBTOTAL	3840	3326	1647	✳ 5487	3842	~~3326~~ 3842	
		TOTAL	3840	3326	1647	✳ 5487	3842	~~3326~~ 3842	

✳ SUB-TOTAL. SEE CONCRETE APPROACH PAVEMENT TABLE.

1

CONCRETE APPROACH PAVEMENT

FROM STATION	TO STATION	LENGTH	WIDTH	LOCATION	CONCRETE PAVEMENT APPROACH (SQ YD)	4" TYPE 5 AGGREGATE BASE (SQ YD)	REMARKS
999+53.53	1000+02.53		40.00	BL I-49 SB	156	156	NORTH END BRIDGE A8806
1003+04.47	1003+25.47	21	40.00	BL I-49 SB	156	156	SOUTH END BRIDGE A8806
				TOTAL	312	# 312	

SUB-TOTAL. SEE OPTIONAL PAVEMENT AND BASE TABLE.

CONDUIT

FROM STATION	TO STATION	LOCATION	CONDUIT, 4 IN., TRENCHED (LF)	CONDUIT, 4 IN., PUSHED (LF)	REMARKS
1000+37	1003+12	I-49 MED.	75	200	STUB ENDS ABOVE GROUND AND CAP. COORDINATE WITH CENTRYLINK
		TOTAL	75	200	

SUMMARY OF QUANTITIES
SHEET 1 OF 4

STATE OF MISSOURI
EARL HARRISON, JR.
NUMBER
E-2003019813
REGISTERED PROFESSIONAL ENGINEER

THIS SHEET HAS BEEN SIGNED, SEALED AND DATED ELECTRONICALLY.

DATE PREPARED 10/9/2020

ROUTE	STATE
I-49	MO
DISTRICT	SHEET NO.
SW	3

COUNTY: VERNON

JOB NO.: J7I3363

CONTRACT ID.

PROJECT NO.

BRIDGE NO.

DATE	DESCRIPTION
10/09/20	1 QUANTITY CHANGES

MISSOURI HIGHWAYS AND TRANSPORTATION COMMISSION
105 WEST CAPITOL
JEFFERSON CITY, MO 65102
1-888-ASK-MODOT (1-888-275-6636)

Hg Consult Inc engineers planners

Hg CONSULT, INC.
PRO. ENGINEER 2010005873

EARL HARRISON, JR.
PROFESSIONAL
ENGINEER
E-2003019813

REV.

MISSOURI HIGHWAYS AND TRANSPORTATION COMMISSION

SUMMARY OF QUANTITIES

1 REVISED

DRAIN BASIN

STATION	LOCATION	OFFSET	2'X4' (EA)	18" DIA (FT)	ROCK LINING (CY)	REMARKS
999+58.99	I-49 SB LANE	31.4' RT	1	77.5	2	NW BRIDGE END
999+93.79	I-49 SB LANE	3.4' LT	1	14.5	2	NE BRIDGE END
1002+85.21	I-49 SB LANE	31.4' RT	1	71.9	2	SW BRIDGE END
1003+20.01	I-49 SB LANE	3.4' LT	1	12.0	2	SE BRIDGE END
	SUBTOTAL		4	175.9	8	
	TOTAL		4	176	8	

TEMPORARY EROSION CONTROL

FROM STATION	TO STATION	LOCATION	OFFSET	ROCK DITCH CHECK (LF)	SILT FENCE (LF)	SEDIMENT REMOVAL (CY)	REMARKS
990+70	999+37	I-49 SB LANE	RT		867	9	NORTH
993+81	999+77	I-49 SB LANE	LT		599	6	NORTH
999+65	999+86	I-49 SB LANE	RT	45		3	NORTH - 3 DITCH CHECKS SPACED 15' APART
1001+81	1001+72	I-49 SB LANE	RT	45		3	SOUTH - 3 DITCH CHECKS SPACED 15' APART
1002+52	1010+52	I-49 SB LANE	RT		833	9	SOUTH
1003+38	1009+81	I-49 SB LANE	LT		645	7	SOUTH
		SUBTOTAL		90	2944	37	
		TOTAL		90	2944	37	

GUARDRAIL

FROM STATION	TO STATION	LOCATION	MGS GUARDRAIL (FT)	TYPE A MASH END TERMINAL (EA)	MGS VERTICAL BARRIER TRANSITION (EA)	MGS END ANCHOR (EA)	REMARKS
990+96	999+72	I-49 SB	787.5	1	1		NW CORNER OF SB BRIDGE
993+89	1000+15	I-49 SB	537.5	1	1		NE CORNER OF SB BRIDGE
1002+64	1010+49	I-49 SB	750		1	1	SW CORNER OF SB BRIDGE
999+95	1000+96	I-49 NB	12.5	1	1		NW CORNER OF NB BRIDGE
1000+30	1001+31	I-49 NB	12.5	1	1		NE CORNER OF NB BRIDGE
		TOTAL	2100	4	5	1	

SEEDING - COOL SEASON MIXTURES

FROM STATION	TO STATION	LOCATION	OFFSET	QUANTITY (AC)	REMARKS
990+70	1001+17	I-49 SB	RT	0.7	NORTH
993+81	1001+76	I-49 SB	LT	0.4	NORTH
1001+25	1010+52	I-49 SB	RT	0.5	SOUTH
1000+65	1009+81	I-49 SB	LT	0.4	SOUTH
952+50	961+61	I-49	MED	~~0.6~~ 1.0	NORTH TEMP. X-OVER
1055+00	1064+08	I-49	MED	~~0.6~~ 1.0	SOUTH TEMP. X-OVER
		TOTAL		~~3.3~~ 4.1	

1

TYPE 1 DITCH LINER

FROM STATION	TO STATION	LOCATION	FURNISH (CY)	PLACE (CY)	GEOTEXTILE FABRIC (SY)	REMARKS
999+60	1000+27	I-49 SB RT	9	9	43	NORTH END
1001+69	1001+96	I-49 SB RT	7	7	29	SOUTH END
		SUBTOTAL	16	16	72	
		TOTAL	16	16	72	

TYPE 2 ROCK BLANKET

FROM STATION	TO STATION	LOCATION	FURNISH (CY)	PLACE (CY)	GEOTEXTILE FABRIC (SY)	REMARKS
999+71	1000+49	I-49 MEDIAN	218	218	436	
1002+19	1003+18	I-49 MEDIAN	218	218	436	
		SUBTOTAL	436	436	872	
		TOTAL	436	436	872	

SHOULDER RUMBLE STRIP

FROM STATION	TO STATION	LOCATION	QUANTITY (STA.)	REMARKS
952+52	956+26	I-49 SB INSIDE SHOULDER	3.7	INSTALL AFTER CROSSOVER REMOVAL
957+91	961+60	I-49 NB INSIDE SHOULDER	3.7	INSTALL AFTER CROSSOVER REMOVAL
993+81	999+53	I-49 SB INSIDE SHOULDER	5.7	
993+81	999+53	I-49 SB OUTSIDE SHOULDER	5.7	
1003+26	1009+82	I-49 SB INSIDE SHOULDER	6.6	
1003+26	1009+82	I-49 SB OUTSIDE SHOULDER	6.6	
1055+00	1058+63	I-49 NB INSIDE SHOULDER	3.6	INSTALL AFTER CROSSOVER REMOVAL
1060+41	1064+08	I-49 SB INSIDE SHOULDER	3.7	INSTALL AFTER CROSSOVER REMOVAL
PROJECT TOTALS			39.3	

PAVEMENT EDGE TREATMENT

FROM STATION	TO STATION	LOCATION	QUANTITY (L.F.)	REMARKS
952+51	956+27	I-49 SB	376	NORTH X-OVER, SBL
957+90	961+62	I-49 SB	372	NORTH X-OVER, NBL
1055+00	1058+64	I-49 NB	364	SOUTH X-OVER, NBL
1060+40	1064+08	I-49 NB	368	SOUTH X-OVER, SBL
TOTAL			1480	

CHAIN-LINK FENCE (48 IN.)

STATION	LOCATION	QUANTITY (LF)	REMARKS
1001+01	I-49 SB LANE	123	3' BEHIND NORTH RET. WALL, EXCEPT BRIDGE COLUMNS
1002+06	I-49 SB LANE	103	3' BEHIND SOUTH RET. WALL, EXCEPT BRIDGE COLUMNS
	TOTAL	226	

SUMMARY OF QUANTITIES
SHEET 2 OF 4

STATE OF MISSOURI
EARL HARRISON, JR.
NUMBER
E-2003019813
REGISTERED PROFESSIONAL ENGINEER

THIS SHEET HAS BEEN SIGNED, SEALED AND DATED ELECTRONICALLY.

DATE PREPARED 10/9/2020
ROUTE I-49 | STATE MO
DISTRICT SW | SHEET NO. 3
COUNTY VERNON
JOB NO. J7I3363
CONTRACT ID.
PROJECT NO.
BRIDGE NO.

DATE	DESCRIPTION
10/09/20	1 QUANTITY CHANGES

MISSOURI HIGHWAYS AND TRANSPORTATION COMMISSION
105 WEST CAPITOL
JEFFERSON CITY, MO 65102
1-888-ASK-MODOT (1-888-275-6636)

Hg Consult inc engineers planners

Hg CONSULT, INC.
PRO. ENGINEER 2010005873

EARL HARRISON, JR.
PROFESSIONAL
ENGINEER
E-2003019813

REV.

MISSOURI HIGHWAYS AND TRANSPORTATION COMMISSION

SUMMARY OF QUANTITIES

1 REVISED

PAVEMENT MARKING REMOVAL							
FROM STATION	TO STATION	LOCATION	4" WHITE SOLID (LF)	4" YELLOW SOLID (LF)	6" WHITE INTERMITTENT (LF)	6" YELLOW SOLID (LF)	REMARKS
EXISTING PAVEMENT MARKING							
939+12	956+26	I-49 SB			430		
952+52	956+26	I-49 SB				374	
950+00	1078+40	I-49 NB			3210		
957+91	1058+63	I-49 NB				10072	
1060+41	1064+08	I-49 SB				367	
TEMPORARY PAVEMENT MARKING							
939+12	957+03	I-49 SB	1791				
953+53	961+61	I-49 SB	808				8" TEMP. X-OVER ON MAINLINE
950+00	960+41	I-49 NB		1041			
952+52	960+41	I-49 NB		789			8" TEMP. X-OVER ON MAINLINE
960+41	1056+06	I-49 NB		9565			
1056+06	1078+40	I-49 NB		2234			
1056+06	1064+08	I-49 NB		802			8" TEMP. X-OVER ON MAINLINE
1055+00	1063+02	I-49 SB	802				8" TEMP. X-OVER ON MAINLINE
SUBTOTAL			3401	14431	3640	10813	
PROJECT TOTALS			32285				

TEMPORARY LIGHTING
LUMP SUM = 1

TEMPORARY PAVEMENT MARKING						
PHASE	FROM STATION	TO STATION	LOCATION	4" WHITE SOLID (LF)	4" YELLOW SOLID (LF)	REMARKS
PHASE 2	939+12	957+03	I-49 SB	1791		
PHASE 2	0+00	8+94	N. TEMP. X-OVER		1788	TEMP. 8" YELLOW
PHASE 2	0+00	9+12	N. TEMP. X-OVER	1824		TEMP. 8" WHITE
PHASE 2	950+00	960+42	I-49 NB		1042	
PHASE 2	960+42	1056+06	I-49 NB CL		19128	DOUBLE SOLID YELLOW
PHASE 2	961+61	1055+00	I-49 NB		9339	RT EDGE LINE FOR SB TRAFFIC
PHASE 2	1056+06	1078+40	I-49 NB		2234	
PHASE 2	1+06	9+12	S. TEMP. X-OVER		1612	TEMP. 8" YELLOW
PHASE 2	0+00	8+06	S. TEMP. X-OVER	1612		TEMP. 8" WHITE
			SUBTOTAL	5,227	35,143	
			PROJECT TOTAL	~~4,780~~ 5,227	~~23,960~~ 35,143	

1

PERMANENT PAVEMENT MARKING						
FROM STATION	TO STATION	LOCATION	HIGH BUILD WATERBORNE PAVEMENT MARKING PAINT, 6", WHITE, TYPE L BEADS SOLID (LF)	HIGH BUILD WATERBORNE PAVEMENT MARKING PAINT, 6", WHITE, TYPE L BEADS INTERMITTENT (LF)	HIGH BUILD WATERBORNE PAVEMENT MARKING PAINT, 6", YELLOW, TYPE L BEADS SOLID (LF)	REMARKS
939+12	956+26	I-49 SB		430		TEMP. P.M. REPLACEMENT
952+52	956+26	I-49 SB			374	TEMP. P.M. REPLACEMENT
950+00	1078+40	I-49 NB		3210		TEMP. P.M. REPLACEMENT
957+91	1058+63	I-49 NB			10072	TEMP. P.M. REPLACEMENT
993+81	1009+81	I-49 SB	1604	400	1604	
1060+41	1064+08	I-49 SB			367	TEMP. P.M. REPLACEMENT
SUBTOTAL			1604	4040	12417	
PROJECT TOTALS			5644		12417	

SUMMARY OF QUANTITIES
SHEET 3 OF 4

STATE OF MISSOURI
EARL HARRISON, JR.
NUMBER
E-2003019813
REGISTERED PROFESSIONAL ENGINEER

THIS SHEET HAS BEEN SIGNED, SEALED AND DATED ELECTRONICALLY.

DATE PREPARED 10/9/2020
ROUTE I-49 | STATE MO
DISTRICT SW | SHEET NO. 3
COUNTY VERNON
JOB NO. J7I3363
CONTRACT ID.
PROJECT NO.
BRIDGE NO.

DATE	DESCRIPTION
10/09/20	1 QUANTITY CHANGES

MISSOURI HIGHWAYS AND TRANSPORTATION COMMISSION
105 WEST CAPITOL
JEFFERSON CITY, MO 65102
1-888-ASK-MODOT (1-888-275-6636)

Hg Consult Inc engineers planners

Hg CONSULT, INC.
PRO. ENGINEER 2010005873

EARL HARRISON, JR.
PROFESSIONAL
ENGINEER
E-2003019813

REV.

NORTH TEMP. CROSSOVER
PI 2+02.84
PC 0+00.00
PT 4+04.97
Δ 8° 15′ 47.6″ (LT)
D 2° 02′ 25.6″
L 404.97′
T 202.84′
R 2,808.00′
S.E. 4% MAX.

NORTH TEMP. CROSSOVER
PI 7+10.14
PC 5+07.31
PT 9+12.26
Δ 8° 15′ 45.6″ (RT)
D 2° 02′ 25.6″
L 404.94′
T 202.82′
R 2,808.00′
S.E. 4% MAX.

SCALE
0 50 100 150 200 250

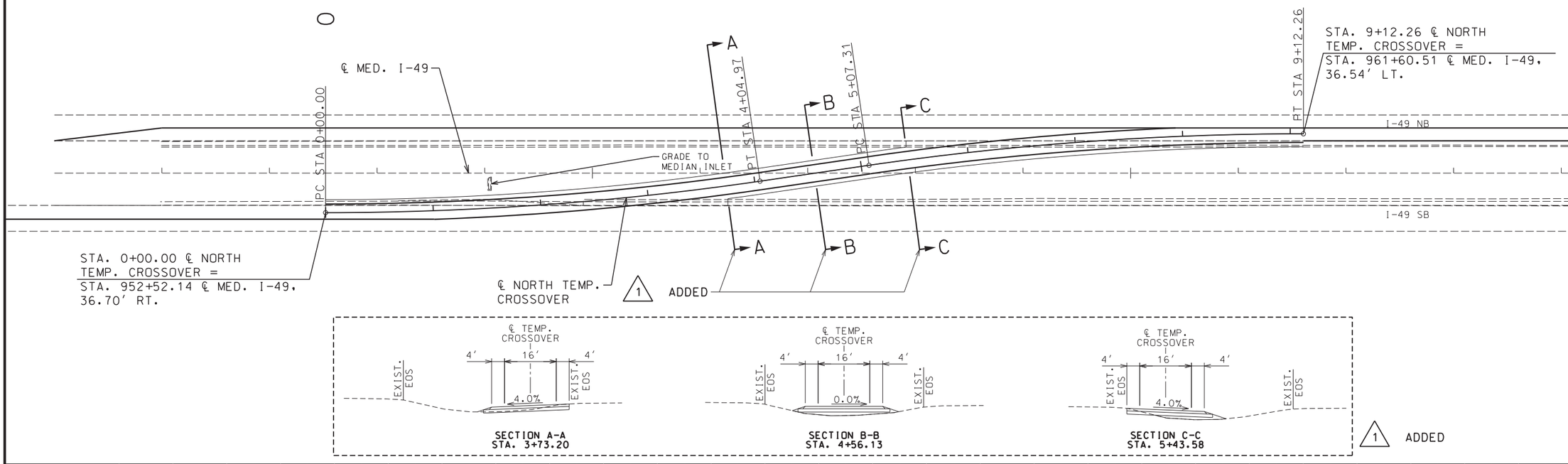

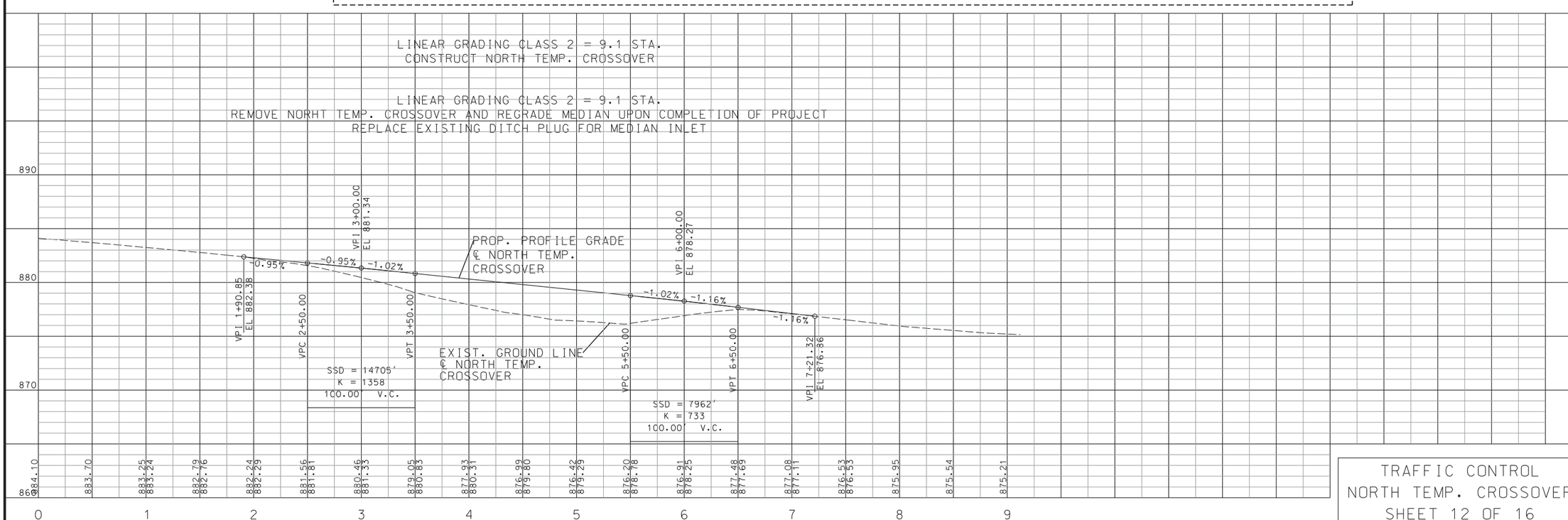

TRAFFIC CONTROL
NORTH TEMP. CROSSOVER
SHEET 12 OF 16

STATE OF MISSOURI
EARL HARRISON, JR.
NUMBER E-2003019813
REGISTERED PROFESSIONAL ENGINEER

THIS SHEET HAS BEEN SIGNED, SEALED AND DATED ELECTRONICALLY.

DATE PREPARED	
10/9/2020	
ROUTE	STATE
I-49	MO
DISTRICT	SHEET NO.
SW	18
COUNTY	
VERNON	
JOB NO.	
J7I3363	
CONTRACT ID.	
PROJECT NO.	
BRIDGE NO.	

DATE		DESCRIPTION
10/09/20	1	ADD SECTIONS

MISSOURI HIGHWAYS AND TRANSPORTATION COMMISSION
105 WEST CAPITOL
JEFFERSON CITY, MO 65102
1-888-ASK-MODOT (1-888-275-6636)

Hg Consult Inc engineers planners

Hg CONSULT, INC.
PRO. ENGINEER 2010005873

EARL HARRISON, JR.
PROFESSIONAL ENGINEER
E-2003019813

REV.

G:\My Drive\Hg Projects\2018\18.077 Vernon County Bridge (HW LOCHNER)\Civil\Sheet_Files\Traffic Control\018_TC_12_J7I3363_i50_I49_NTXO_R001.dgn 11:11:26 AM 10/9/2020

SOUTH TEMP. CROSSOVER
PI 2+02.76
PC 0+00.00
PT 4+04.83
Δ 8° 15′ 37.0″ (RT)
D 2° 02′ 25.6″
L 404.83′
T 202.76′
R 2,808.00′
S.E. 4% MAX.

SOUTH TEMP. CROSSOVER
PI 7+09.79
PC 5+07.14
PT 9+11.74
Δ 8° 15′ 20.7″ (LT)
D 2° 02′ 25.6″
L 404.60′
T 202.65′
R 2,808.00′
S.E. 4% MAX.

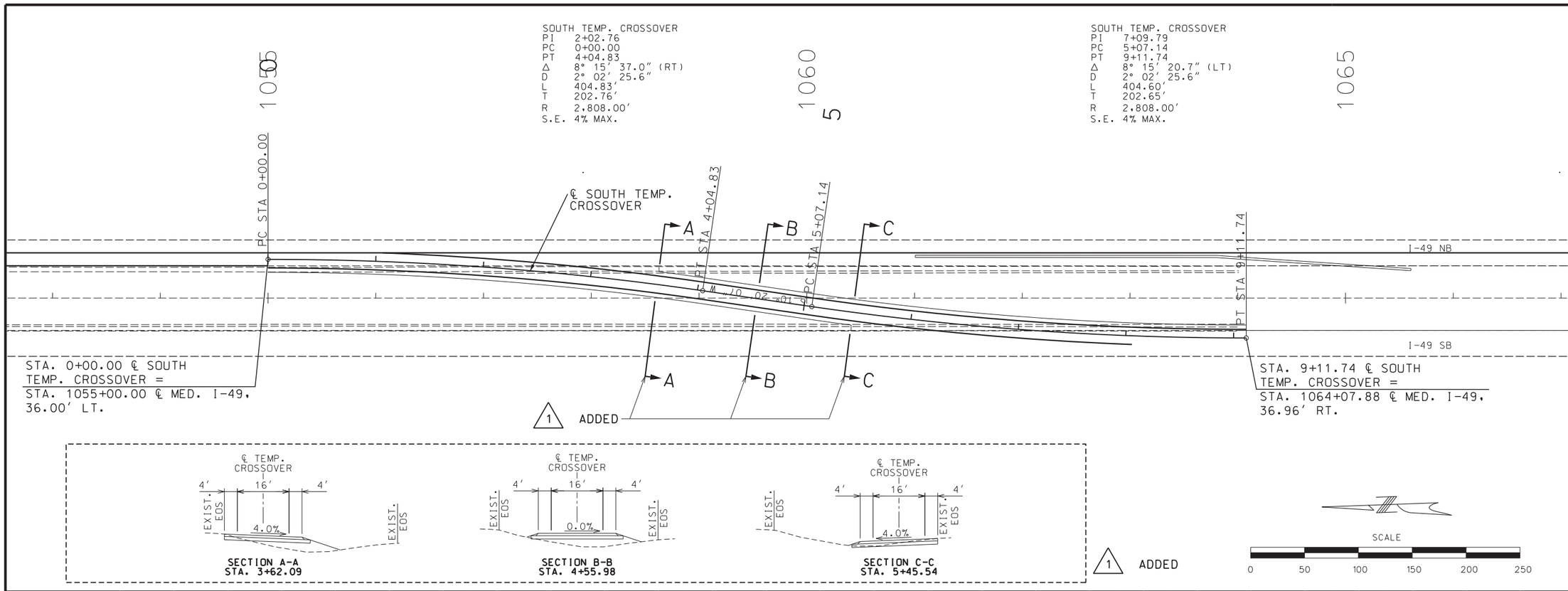

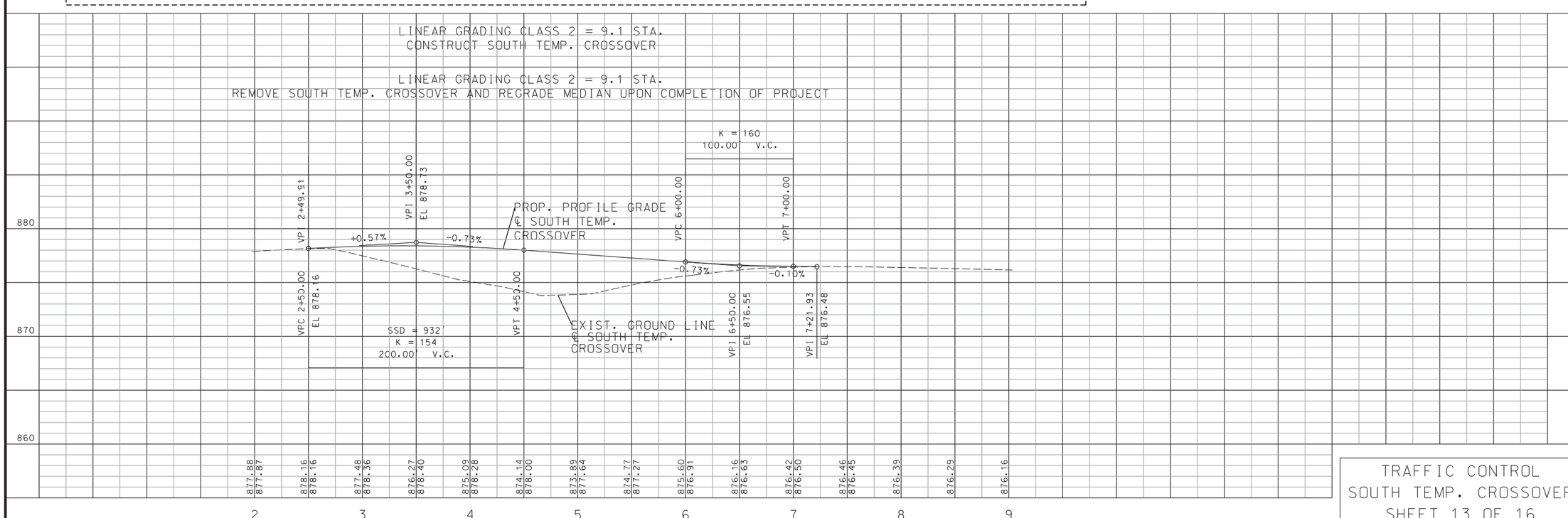

TRAFFIC CONTROL
SOUTH TEMP. CROSSOVER
SHEET 13 OF 16

STATE OF MISSOURI
EARL HARRISON, JR.
NUMBER E-2003019813
REGISTERED PROFESSIONAL ENGINEER

THIS SHEET HAS BEEN SIGNED, SEALED AND DATED ELECTRONICALLY.

DATE PREPARED	
10/9/2020	
ROUTE	STATE
I-49	MO
DISTRICT	SHEET NO.
SW	19
COUNTY	
VERNON	
JOB NO.	
J7I3363	
CONTRACT ID.	
PROJECT NO.	
BRIDGE NO.	

DATE	DESCRIPTION
10/09/20	1 ADD SECTIONS

MISSOURI HIGHWAYS AND TRANSPORTATION COMMISSION
105 WEST CAPITOL
JEFFERSON CITY, MO 65102
1-888-ASK-MODOT (1-888-275-6636)

Hg Consult Inc engineers planners

Hg CONSULT, INC.
PRO. ENGINEER 2010005873

EARL HARRISON, JR.
PROFESSIONAL ENGINEER
E-2003019813

REV.

G:\My Drive\Hg Projects\2018\18.077 Vernon County Bridge (HW LOCHNER)\Civil\Sheet_Files\Traffic Control\019_TC_13_J7I3363_I50_I49_STXO_R001.dgn 11:11:37 AM 10/9/2020

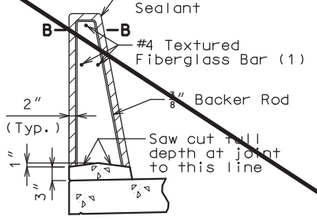

SECTION THRU SAW CUT JOINT

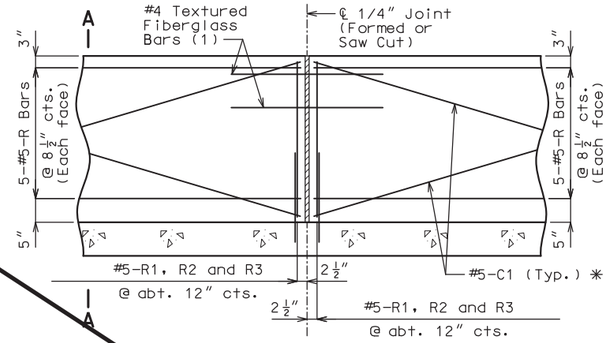

PART ELEVATION OF BARRIER

(1) Four feet long, centered on joint, slip-formed option only

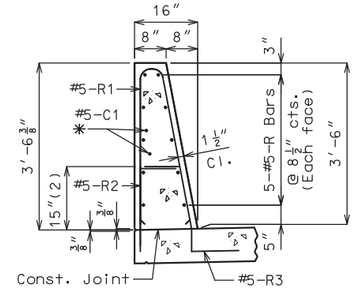

SECTION A-A

Use a minimum lap of 3'-1" for #5 horizontal barrier bars.

The cross-sectional area above the slab is 3.52 square feet.

(2) To top of bar

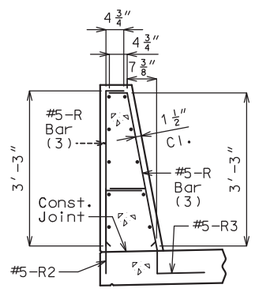

R-BAR PERMISSIBLE ALTERNATE SHAPE

(3) The R1 bar may be separated into two bars as shown, at the contractor's option, only when slip forming is not used. (All dimensions are out to out.)

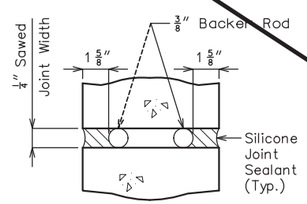

SECTION B-B

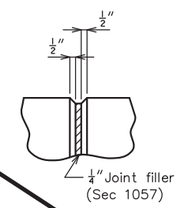

PART ELEVATION AT FORMED JOINT

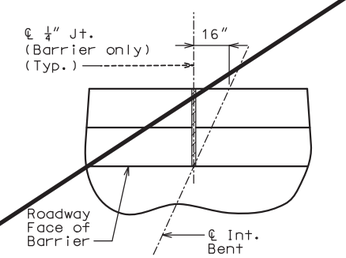

PART PLAN SHOWING JOINT LOCATION

General Notes:

✳ Slip-formed option only.

Conventional forming or slip forming may be used. Saw cut joints may be used with conventional forming.

Top of barrier shall be built parallel to grade and barrier joints (except at end bents) normal to grade.

All exposed edges of barrier shall have either a 1/2-inch radius or a 3/8-inch bevel, unless otherwise noted.

Payment for all concrete and reinforcement, complete in place, will be considered completely covered by the contract unit price for Type D Barrier per linear foot.

Concrete in barrier shall be Class B-1.

Measurement of barrier is to the nearest linear foot for each structure, measured along the outside top of slab from end of wing to end of wing.

Concrete traffic barrier delineators shall be placed on top of the barrier as shown on Missouri Standard Plan 617.10 and in accordance with Sec 617. Delineators on bridges with two-lane, two-way traffic shall have retroreflective sheeting on both sides. Concrete traffic barrier delineators will be considered completely covered by the contract unit price for Type D Barrier.

Joint sealant and backer rods shall be in accordance with Sec 717 for silicone joint sealant for saw cut and formed joints.

For slip-formed option, both sides of barrier shall have a vertically broomed finish and the top shall have a transversely broomed finish.

For details of fence attachments, see Sheet No. 22.

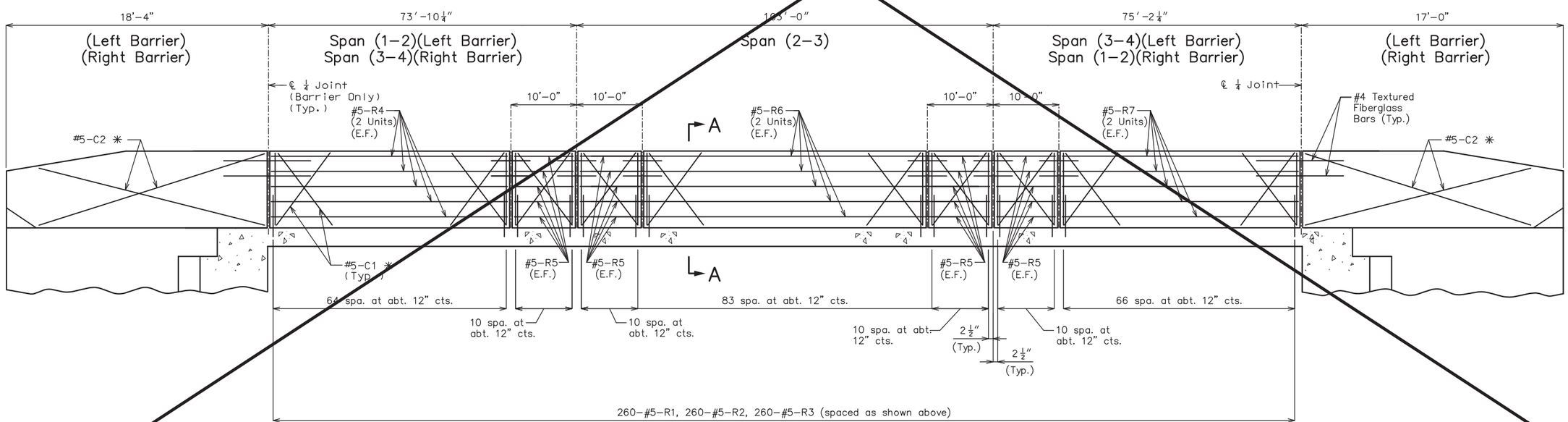

ELEVATION OF TYPE D BARRIER

Longitudinal dimensions are horizontal.

E.F. = Each Face

C 1 SHEET DELETED 10/6/2020

DESIGNED BY:	KLW	4/2020
DETAILED BY:	JTC	4/2020
CHECKED BY:	DMA	5/2020

Note: This drawing is not to scale. Follow dimensions.

STATE OF MISSOURI — KEITH LAWRENCE WETTER — NUMBER E-25019 — REGISTERED PROFESSIONAL ENGINEER

THIS SHEET HAS BEEN SIGNED, SEALED AND DATED ELECTRONICALLY

DATE PREPARED	
7/10/2020	
ROUTE I-49	STATE MO
DISTRICT BR	SHEET NO. 20
COUNTY VERNON	
JOB NO. J7I3363	
CONTRACT ID.	
PROJECT NO.	
BRIDGE NO. A8806	

DATE	DESCRIPTION
10/6/2020	DELETED ENTIRE SHEET

MISSOURI HIGHWAYS AND TRANSPORTATION COMMISSION
105 WEST CAPITOL
JEFFERSON CITY, MO 65102
1-888-ASK-MODOT (1-888-275-6636)

LOCHNER
6105 W. 113th Street | Suite 107 | Lenexa, KS 66219
Certificate of Authority #F00727076

REV.

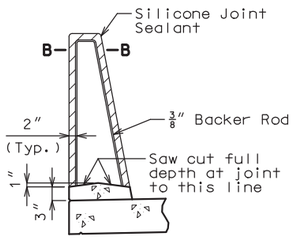

SECTION THRU SAW CUT JOINT

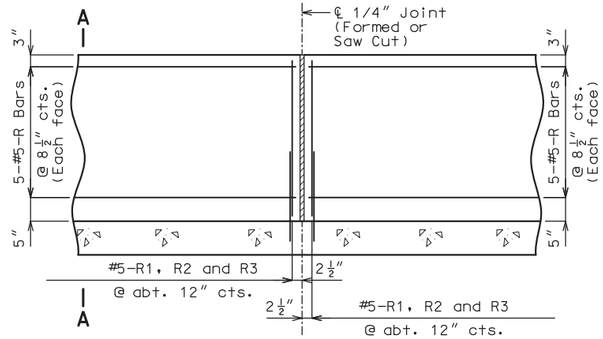

PART ELEVATION OF BARRIER

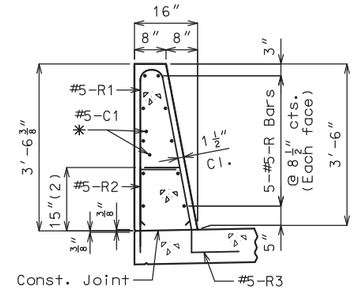

SECTION A-A

Use a minimum lap of 3′-1″ for #5 horizontal barrier bars.

The cross-sectional area above the slab is 3.52 square feet.

(2) To top of bar

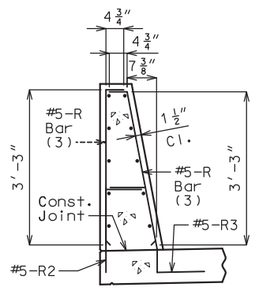

R-BAR PERMISSIBLE ALTERNATE SHAPE

(3) The R1 bar may be separated into two bars as shown, at the contractor's option. (All dimensions are out to out.)

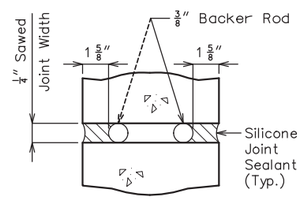

SECTION B-B

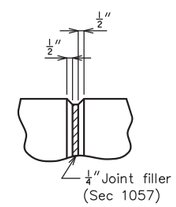

PART ELEVATION AT FORMED JOINT

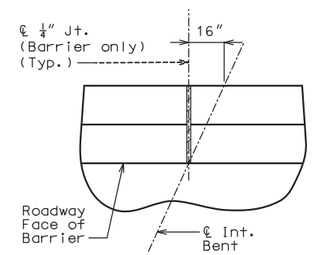

PART PLAN SHOWING JOINT LOCATION

General Notes:

Conventional forming shall be used. Saw cut joints may be used with conventional forming.

Top of barrier shall be built parallel to grade and barrier joints (except at end bents) normal to grade.

All exposed edges of barrier shall have either a 1/2-inch radius or a 3/8-inch bevel, unless otherwise noted.

Payment for all concrete and reinforcement, complete in place, will be considered completely covered by the contract unit price for Type D Barrier per linear foot.

Concrete in barrier shall be Class B-1.

Measurement of barrier is to the nearest linear foot for each structure, measured along the outside top of slab from end of wing to end of wing.

Concrete traffic barrier delineators shall be placed on top of the barrier as shown on Missouri Standard Plan 617.10 and in accordance with Sec 617. Delineators on bridges with two-lane, two-way traffic shall have retroreflective sheeting on both sides. Concrete traffic barrier delineators will be considered completely covered by the contract unit price for Type D Barrier.

Joint sealant and backer rods shall be in accordance with Sec 717 for silicone joint sealant for saw cut and formed joints.

For details of fence attachments, see Sheet No. 22.

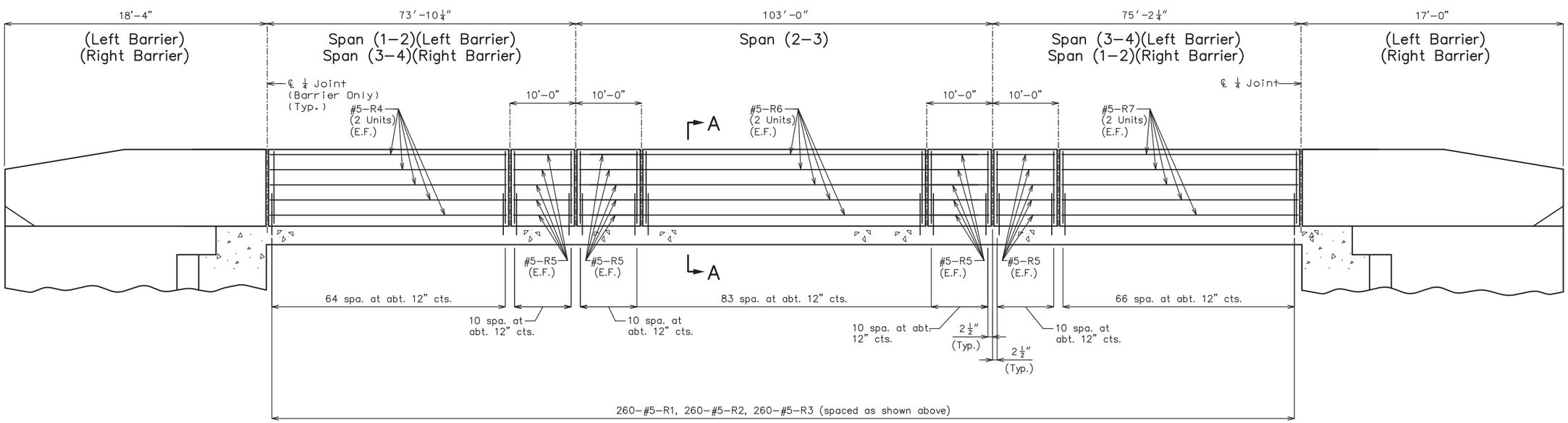

ELEVATION OF TYPE D BARRIER

Longitudinal dimensions are horizontal.

E.F. = Each Face

C 1 SHEET ADDED 10/6/2020

Note: This drawing is not to scale. Follow dimensions.

Sheet No. 20A of 31

DESIGNED BY:	KLW 10/2020
DETAILED BY:	JTC 10/2020
CHECKED BY:	DMA 10/2020

STATE OF MISSOURI
KEITH LAWRENCE WETTER
NUMBER E-25019
REGISTERED PROFESSIONAL ENGINEER

THIS SHEET HAS BEEN SIGNED, SEALED AND DATED ELECTRONICALLY

DATE PREPARED	
10/6/2020	
ROUTE I-49	STATE MO
DISTRICT BR	SHEET NO. 20A
COUNTY VERNON	
JOB NO. J7I3363	
CONTRACT ID.	
PROJECT NO.	
BRIDGE NO.	

DATE	DESCRIPTION
10/6/2020	Remove Slipform Option

MISSOURI HIGHWAYS AND TRANSPORTATION COMMISSION
105 WEST CAPITOL
JEFFERSON CITY, MO 65102
1-888-ASK-MODOT (1-888-275-6636)

LOCHNER
16105 W. 113th Street | Suite 107 | Lenexa, KS 66219
Certificate of Authority #F00727076

REV.

B_A8806_020A_J7I3363_BARRIER-DETAILS OF TYPE D_R001.dgn 10:45:29 AM 10/6/2020