SEC/SUR 33 TWP 65N RGE 42W

MISSOURI HIGHWAYS AND TRANSPORTATION COMMISSION

SCOUR MITIGATION OF EXISTING (133'-133') CONTINUOUS GIRDER SPANS (420'-420') CONTINUOUS THROUGH TRUSS SPANS (133'-133'-133')(133'-133'-133') CONTINUOUS GIRDER SPANS

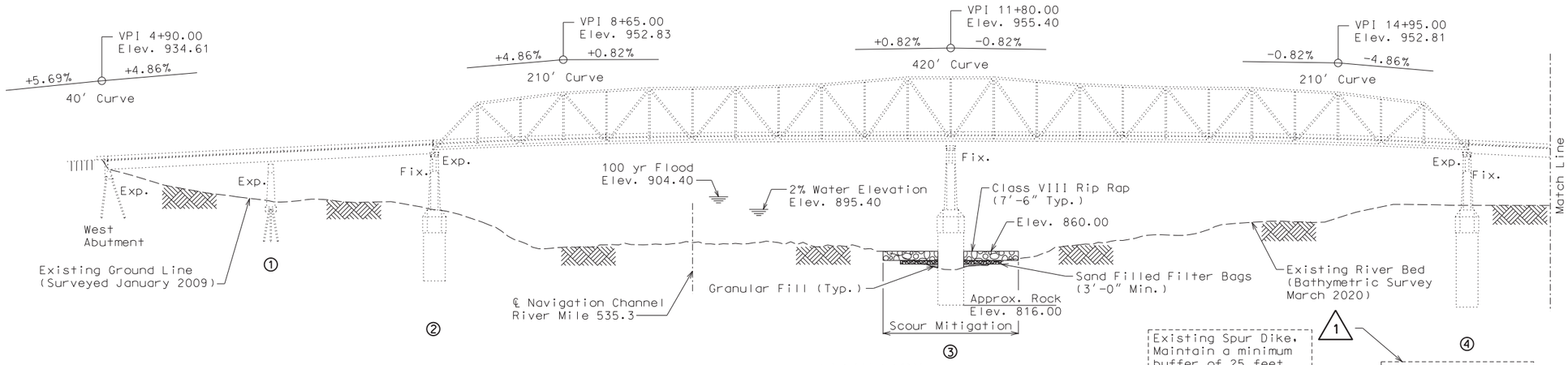

ELEVATION

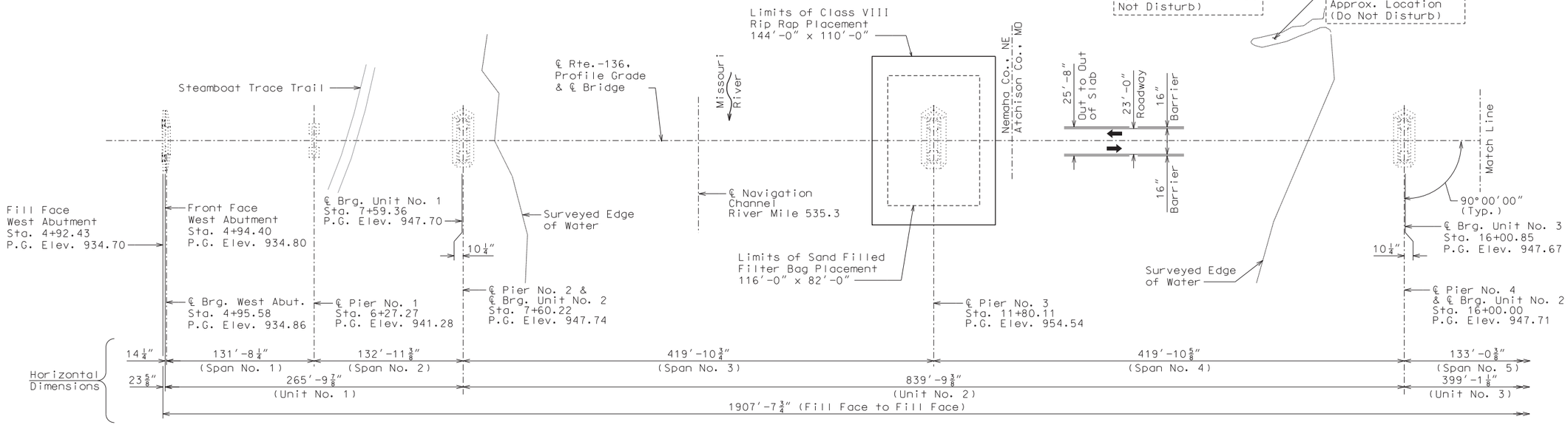

PLAN

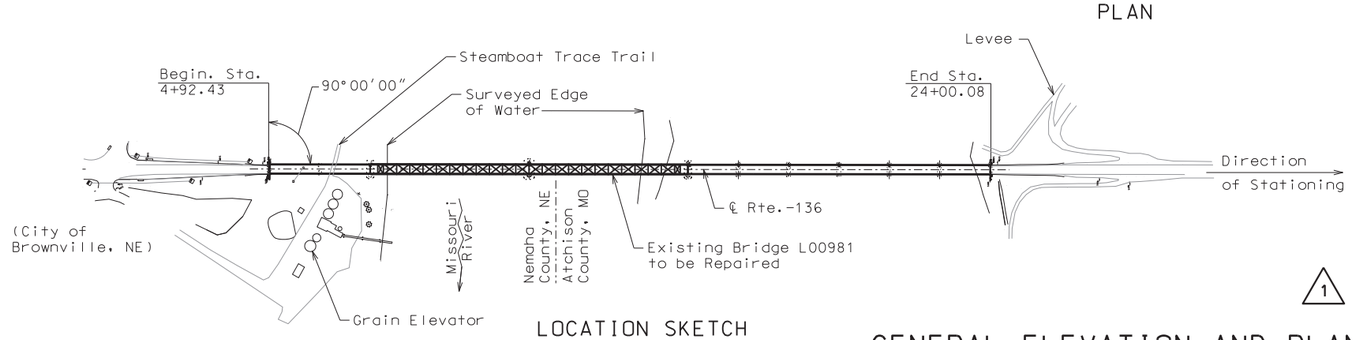

LOCATION SKETCH

BM -½" REBAR, 381.2' NE OF WEST ABUTMENT, 302.5' NE OF NE CORNER OF PIER 1, 297.8' NW OF CHISELED SQUARE ON THE SE CORNER OF PIER 2, 294' NE OF THE NORTH FACE OF NORTHERN MOST GRAIN SILO, ELEV. 898.51.

BM -½" REBAR, 1118.6' SE OF WEST ABUTMENT, 1094.9' SE OF SE CORNER OF PIER 1, 1078.7' SE OF CHISELED SQUARE ON THE SE CORNER OF PIER 2, 1044.7' SE OF THE SOUTH FACE OF SOUTHERN MOST GRAIN SILO, ELEV. 891.91.

REPAIRS TO BRIDGE OVER THE MISSOURI RIVER

STATE ROAD FROM RTE. D TO NEBRASKA STATE LINE

ABOUT 1.7 MILES WEST OF RTE. D

STA. 4+92.43 (MATCH EXISTING)

1 REVISED

GENERAL ELEVATION AND PLAN

Detailed June 2020
Checked June 2020

Note: This drawing is not to scale. Follow dimensions.

Sheet No. 1 of 19

STD. 616.10

STATE OF MISSOURI THADDEUS KOSMICKI NUMBER PE-2008000074 PROFESSIONAL ENGINEER

THIS SHEET HAS BEEN SIGNED, SEALED AND DATED ELECTRONICALLY

DATE PREPARED	
10/2/2020	
ROUTE 136	STATE MO
DISTRICT BR	SHEET NO. 1
COUNTY ATCHISON	
JOB NO. J1P3384	
CONTRACT ID.	
PROJECT NO.	
BRIDGE NO. L00983	

DATE	DESCRIPTION
10/02/20	1 - REV. NOTE REVISED

MISSOURI HIGHWAYS AND TRANSPORTATION COMMISSION

105 WEST CAPITOL
JEFFERSON CITY, MO 65102
1-888-ASK-MODOT (1-888-275-6636)

HDR Engineering, Inc.
10450 Holmes Road
Suite 600
Kansas City, MO 64131
816-360-2700
Certificate of Authority: 000856

c:\pwworking\central01\d1727674\B_L00982_J1P3384_001_R001.DGN 12:38:36 PM 10/2/2020