MISSOURI HIGHWAYS AND TRANSPORTATION COMMISSION
PLANS FOR PROPOSED STATE HIGHWAY
GASCONADE COUNTY

SEC 19/20-T45N-R5W

DESIGN DESIGNATION

A.A.D.T. - 2020 = 264
A.A.D.T. - 2040 = 315
T = 5.3%
V = 55 M.P.H.

FUNCTIONAL CLASSIFICATION - RURAL MINOR COLLECTOR

NO NEW RIGHT OF WAY
TO BE ACQUIRED

TEMPORARY CONSTRUCTION
EASEMENTS ONLY

CONVENTIONAL SYMBOLS
(USED IN PLANS)

	EXISTING	NEW
BUILDINGS AND STRUCTURES		
GUARD RAIL		
CONCRETE RIGHT-OF-WAY MARKER		
STEEL RIGHT-OF-WAY MARKER		
LOCATION SURVEY MARKER		
UTILITIES		
FIBER OPTICS	—FO—	—FO—
OVERHEAD TELEPHONE	—O—	—●—
UNDERGROUND TELEPHONE	—T—	—T—
OVERHEAD POWER	—□—	—■—
UNDERGROUND POWER	—P—	—P—
GAS	—G—	—G—
WATER	—W—	—W—
MANHOLE	SAN	
FIRE HYDRANT	HYD	
WATER VALVE	WV	
WATER METER	WM	
DROP INLET	D	
DITCH BLOCK		
GROUND MOUNTED SIGN	SIGN	
LIGHT POLE		
H-FRAME POWER POLE		
TELEPHONE PEDESTAL	PED	
FENCE		
CHAIN LINK	—V—	
WOVEN WIRE	—X—	
GATE POST		
BENCHMARK	BM	

NOTE: DASHED OR OPEN SYMBOLS INDICATE EXISTING FEATURES

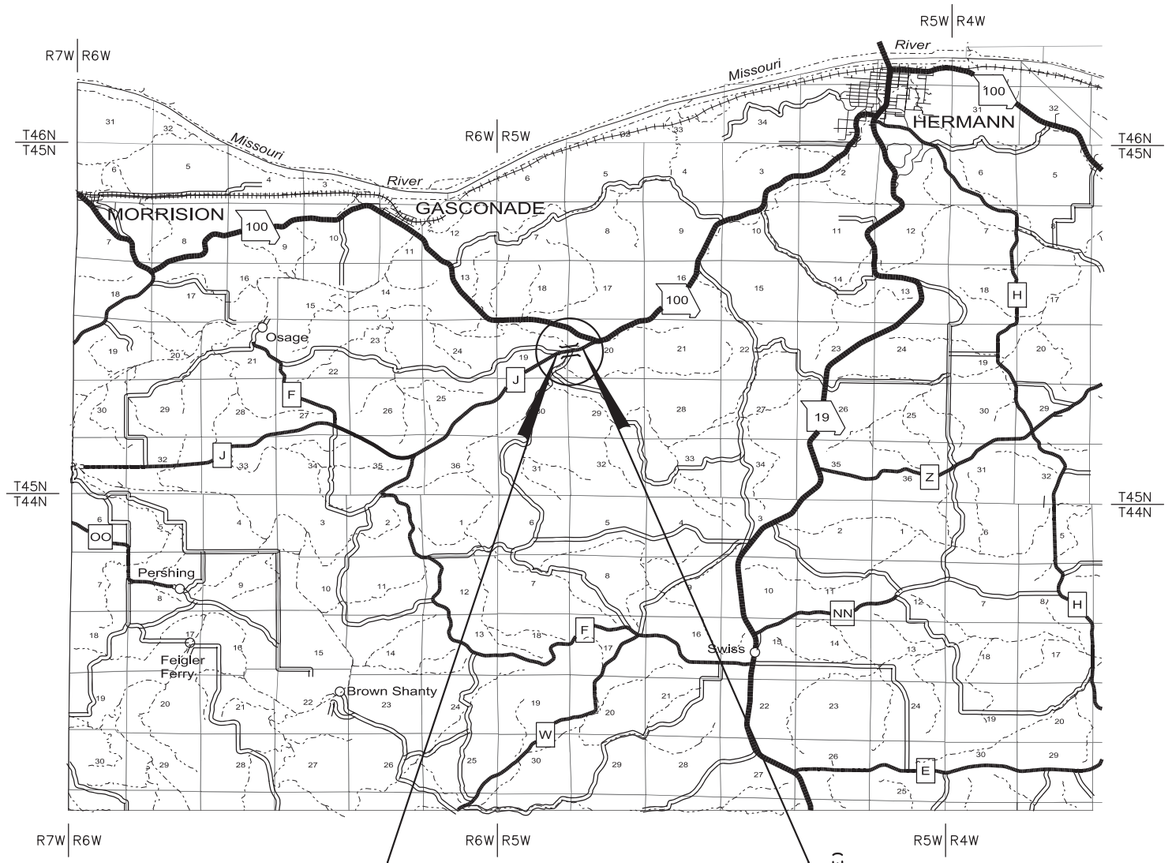

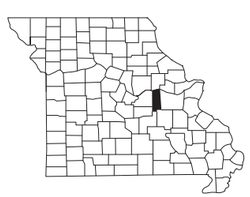

KEY MAP
SHOWING LOCATION OF GASCONADE COUNTY

END STA. 340+95.00
END LOG MILE 7.726 (E)

PROJECT LIMITS
RTE J BRIDGE A8880 OVER FIRST CREEK
BRIDGE REPLACEMENT AND ROAD IMPROVEMENTS
0.063 MILES

BEGIN STA. 337+64.00
BEGIN LOG MILE 7.663 (E)

1 0 1 2
SCALE IN MILES

THE EXISTENCE AND APPROXIMATE LOCATION OF UTILITY FACILITIES KNOWN TO EXIST, AS SHOWN ON THE PLANS, ARE BASED ON THE BEST INFORMATION AVAILABLE TO THE COMMISSION AT THIS TIME. THIS INFORMATION IS PROVIDED BY THE COMMISSION "AS-IS" AND THE COMMISSION EXPRESSLY DISCLAIMS ANY REPRESENTATION OR WARRANTY AS TO THE COMPLETENESS, ACCURACY, OR SUITABILITY OF THE INFORMATION FOR ANY USE. RELIANCE UPON THIS INFORMATION IS DONE AT THE RISK AND PERIL OF THE USER, AND THE COMMISSION SHALL NOT BE LIABLE FOR ANY DAMAGES THAT MAY ARISE FROM ANY ERROR IN THE INFORMATION. IT IS, THEREFORE, THE RESPONSIBILITY OF THE CONTRACTOR TO VERIFY THE EXISTENCE, LOCATIONAND STATUS OF ANY FACILITY. SUCH VERIFICATION INCLUDES DIRECT CONTACT WITH THE LISTED UTILITIES.

INDEX OF SHEETS

DESCRIPTION	SHEET NUMBER
TITLE SHEET	1
TYPICAL SECTIONS (TS) (1 SHEET)	2
QUANTITIES (QU) (3 SHEETS)	3
PLAN-PROFILE (PP)	4-5
RIGHT OF WAY (RW)	6
REFERENCE POINTS (RP)	7
COORDINATE POINTS (CP)	-
SPECIAL SHEETS (SS)	8-9
TRAFFIC CONTROL SHEETS (TC)	10-12
EROSION CONTROL SHEETS (EC)	13
LIGHTING (LT)	-
SIGNALS (SG)	-
SIGNING (SN)	14-16
PAVEMENT MARKING (PM)	17
CULVERT SECTIONS (CS)	-
BRIDGE DRAWINGS (B)	
A8880	1-25
CROSS SECTIONS (XS)	1-9

LENGTH OF PROJECT

BEGINNING OF PROJECT	Sta. 337+64
END OF PROJECT	Sta. 340+95
APPARENT LENGTH	331.00 FEET
EQUATIONS AND EXCEPTIONS:	NONE
TOTAL CORRECTIONS	0.00 FEET
NET LENGTH OF PROJECT	331.00 FEET
STATE LENGTH	0.063 MILES
FOR INFORMATION ONLY	
ESTIMATED DISTURBED ACRES	0.5 ACRES

STATE OF MISSOURI
KEITH LAWRENCE WETTER
NUMBER E-25019
REGISTERED PROFESSIONAL ENGINEER

THIS SHEET HAS BEEN SIGNED, SEALED AND DATED ELECTRONICALLY

DATE PREPARED 7/2/2020

ROUTE	STATE
J	MO
DISTRICT	SHEET NO.
CD	1

COUNTY: GASCONADE
JOB NO. J5S3176
CONTRACT ID.
PROJECT NO.
BRIDGE NO.

DESCRIPTION
DATE

MISSOURI HIGHWAYS AND TRANSPORTATION COMMISSION
105 WEST CAPITOL
JEFFERSON CITY, MO 65102
1-888-ASK-MODOT (1-888-275-6636)

LOCHNER
16105 W. 113th Street | Suite 107 | Lenexa, KS 66219
Certificate of Authority #F00727076

REV.

001_TITLE_J5S3176_I1.dgn 12:11:13 PM 7/2/2020

TABLE 1	
STATION	OFFSET
336+55.00	0.00′
339+88.12	0.00′
340+95.00	1.20′

ALL STATIONS AND OFFSETS INCLUDED IN THE PLANS ARE REFERENCE TO THE ℄ ROADWAY.

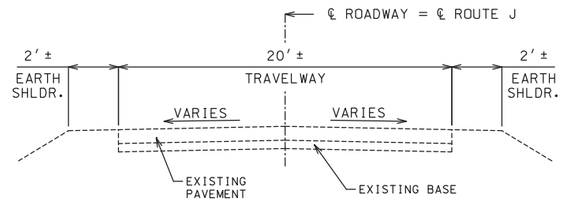

EXISTING TYPICAL SECTION

(1) STA. 337+64.00 TO STA. 337+87.38 TRANSITION CROSS-SLOPE FROM EXIST. TO −2.00 % LEFT SIDE AND EXIST. TO −2.00% RIGHT SIDE.

STA. 340+30.00 TO STA. 340+95.00 TRANSITION CROSS-SLOPE FROM −2.00% TO EXIST. LEFT SIDE AND −2.00% TO EXIST. RIGHT SIDE.

(2) STA. 337+64.00 TO STA. 337+83.01 TRANSITION LANE FROM EXIST. TO 12′ ON THE RIGHT SIDE.

STA. 337+64.00 TO STA. 337+99.75 TRANSITION LANE FROM EXIST. TO 12′ ON THE LEFT SIDE.

STA. 339+89.25 TO STA. 340+95.00 TRANSITION LANE FROM 12′ TO EXIST. ON THE RIGHT SIDE.

STA. 339+97.99 TO STA. 340+95.00 TRANSITION LANE FROM 12′ TO EXIST. ON THE LEFT SIDE.

(3) STA. 337+64.00 TO STA. 337+83.01 TRANSITION SHOULDER FROM EARTH TO 13′ ON THE RIGHT SIDE.

STA. 337+64.00 TO STA. 337+99.75 TRANSITION SHOULDER FROM EARTH TO 13′ ON THE LEFT SIDE.

STA. 339+89.25 TO STA. 340+95.00 TRANSITION SHOULDER FROM 13′ TO EARTH ON THE RIGHT SIDE.

STA. 339+97.99 TO STA. 340+95.00 TRANSITION SHOULDER FROM 13′ TO EARTH ON THE LEFT SIDE.

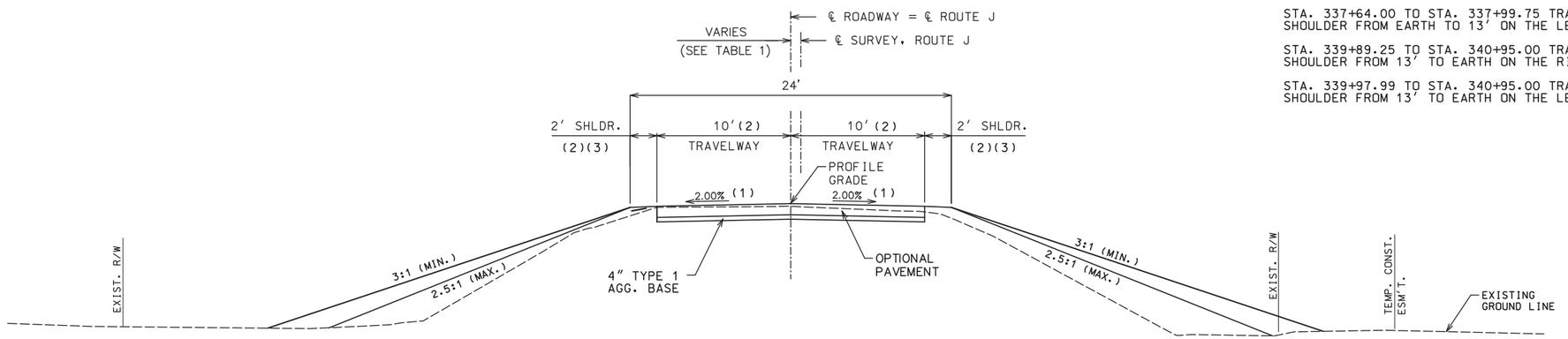

SECTION ON TANGENT – RTE. J
STA. 337+64.00 TO STA. 337+87.38
STA. 339+93.62 TO STA. 340+95.00

OPTIONAL PAVEMENT

HMA DESIGN:
10″ BIT. PAVEMENT
1.75″ BP-1 W/ PG 64-22
8.25″ BB W/ PG 64-22

JPCP DESIGN:
8″ UNREINF. CONCRETE
W/ 15′ JOINT SPACING
1.25″ DOWELS & TIE BARS

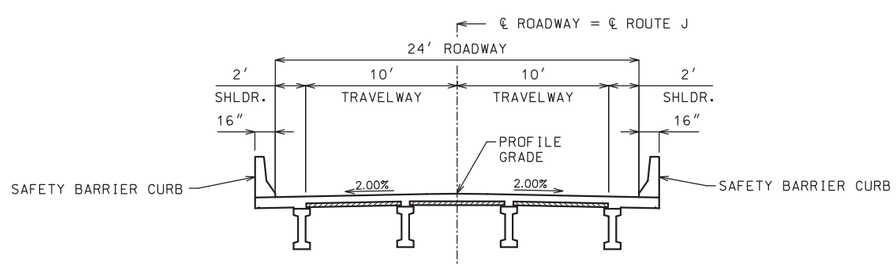

SECTION ON TANGENT – RTE. J
(FOR INFORMATION ONLY)
(SEE BRIDGE PLANS FOR CONSTRUCTION DETAILS)
STA. 337+87.38 TO STA. 339+93.62
(BEGIN AND END BRIDGE APPROACH SLABS)

NOTE: THE CONTRACTOR SHALL INSTALL BRIDGE APPROACH SLABS (MINOR ROAD) AT BOTH BRIDGE ENDS FOR BRIDGE NO. A8880.

NOTE: ANY ADDITIONAL EARTHWORK AND GRADING NECESSARY TO THE COMPLETION OF THE PROJECT AND NOT SHOWN IN THE PLANS SHALL BE CONSIDERED INCIDENTAL TO AND COMPLETELY COVERED BY THE OTHER PAY ITEMS IN THE CONTRACT. THERE WILL BE NO DIRECT PAY FOR ANY ADDITIONAL GRADING OPERATIONS NECESSARY TO COMPLETE THE PROJECT.

TYPICAL SECTION SHEET
SHEET 1 OF 1

STATE OF MISSOURI
KEITH LAWRENCE WETTER
NUMBER E-25019
REGISTERED PROFESSIONAL ENGINEER

THIS SHEET HAS BEEN SIGNED, SEALED AND DATED ELECTRONICALLY

DATE PREPARED 7/2/2020

ROUTE	STATE
J	MO
DISTRICT	SHEET NO.
CD	2

COUNTY: GASCONADE
JOB NO.: J5S3176
CONTRACT ID.
PROJECT NO.
BRIDGE NO.

DESCRIPTION
DATE

MISSOURI HIGHWAYS AND TRANSPORTATION COMMISSION
105 WEST CAPITOL
JEFFERSON CITY, MO 65102
1-888-ASK-MODOT (1-888-275-6636)

LOCHNER
16105 W. 113th Street | Suite 107 | Lenexa, KS 66219
Certificate of Authority #F00727076

REV.

002_TS_01_J5S3176_I5.dgn 12:11:44 PM 7/2/2020

REMOVAL OF IMPROVEMENTS

SHEET	STATION	STATION	LOCATION	OFFSET	DESCRIPTION	UNITS	QUANTITY	REMARKS
4	336+15		ROUTE J	RT	SIGNS	EA	2	YIELD & TO ONCOMING TRAFFIC
4	337+64	338+22	ROUTE J	℄	PAVEMENT	SY	125	E SIDE BRIDGE
4	339+88	340+95	ROUTE J	℄	PAVEMENT	SY	234	W SIDE BRIDGE
4	337+64		ROUTE J	℄	SAW CUT	LF	20	BEGIN PROJECT
4	340+95		ROUTE J	℄	SAW CUT	LF	20	END PROJECT
4	337+79		ROUTE J	RT	SIGN	EA	1	OBJECT MARKER
4	337+85		ROUTE J	LT	SIGN	EA	1	OBJECT MARKER
4	337+97		ROUTE J	RT	SIGN	EA	1	OBJECT MARKER
4	338+06		ROUTE J	LT	SIGN	EA	1	OBJECT MARKER
4	338+17		ROUTE J	RT	SIGN	EA	1	OBJECT MARKER
4	338+25		ROUTE J	LT	SIGN	EA	1	OBJECT MARKER
4	339+84		ROUTE J	RT	SIGN	EA	1	OBJECT MARKER
4	339+93		ROUTE J	LT	SIGN	EA	1	OBJECT MARKER
4	340+04		ROUTE J	RT	SIGN	EA	1	OBJECT MARKER
4	340+13		ROUTE J	LT	SIGN	EA	1	OBJECT MARKER
4	340+24		ROUTE J	RT	SIGN	EA	1	OBJECT MARKER
4	340+32		ROUTE J	LT	SIGN	EA	1	OBJECT MARKER
4	342+16		ROUTE J	LT	SIGNS	EA	2	YIELD & TO ONCOMING TRAFFIC
						PAY	1 LUMP SUM	

CLEARING & GRUBBING

SHEET	STATION	STATION	LOCATION	CLEARING & GRUBBING (AC)	REMARKS
4	337+64	338+70	ROUTE J	0.2	EAST END BRIDGE
4	339+11	340+95	ROUTE J	0.3	WEST END BRIDGE
			TOTALS	0.5	
			PAY TOTALS	1	

RELOCATION OF EXISTING SIGNS

SHEET NO.	STATION	SIDE	REMOVING & REPLACING OF EXISTING SIGN ASSEMBLIES (EA)	REMARKS
4	338+05	RT	1	"FIRST CREEK" SIGN & POST
4	340+05	LT	1	"FIRST CREEK" SIGN & POST
		TOTALS	2	

EARTHWORK SUMMARY

SHEET	FROM STATION	TO STATION	LOCATION	CUT (CY)	FILL (CY)	CLASS A EXCAVATION (CY)	(1) COMPACTING EMBANKMENT (CY)	EMBANKMENT IN PLACE (CY)	REMARKS
4	337+64.00	338+06.85	ROUTE J	35.9	64.0	35.9	64.0	0	
4	338+06.85	338+62.00	ROUTE J	412.9	2.6	412.9	2.6	0	EAST BRIDGE END SPILL FILL
4	339+32.00	339+74.15	ROUTE J	0.0	313.1	0.0	313.1	318.4	WEST BRIDGE END SPILL FILL
4	339+74.15	340+95.00	ROUTE J	59.2	281.4	59.2	281.4	0	
			TOTALS	508.0	661.1	508.0	661.1	318.4	
			PAY TOTALS			508	661	318	

(1) EARTHWORK QUANTITIES ARE BASED ON 20% SHRINK-SWELL FACTOR.

PAVEMENT

SHEET	FROM STATION	TO STATION	LOCATION	AVERAGE PAVEMENT WIDTH (FT)	OPTIONAL PAVEMENT (SY)	4" TYPE 1 AGGR. BASE (SY)	REMARKS
4	337+64.00	337+87.38	ROUTE J	21.9	57.0	57.0	EAST END
4	339+93.62	340+95.00	ROUTE J	21.8	246.0	246.0	WEST END
			TOTALS		303.0	303.0	
			PAY TOTALS		303.0	303	

MOBILIZATION

LOCATION	QUANTITY (L.S.)
PROJECT	1.0
TOTAL	1.0

CONTRACTOR FURNISHED SURVEYING & STAKING

LOCATION	QUANTITY (L.S.)
PROJECT	1.0
TOTAL	1.0

SUBGRADE COMPACTION (6-INCH DEPTH)

SHEET	FROM STATION	TO STATION	LOCATION	QUANTITY (100 FT.)	REMARKS
4	337+64.00	338+06.85	ROUTE J	0.4	EAST END
4	339+74.15	340+95.00	ROUTE J	1.2	WEST END
			TOTALS	1.6	
			PAY TOTAL	2	

SUMMARY OF QUANTITIES
SHEET 1 OF 3

STATE OF MISSOURI
KEITH LAWRENCE WETTER
NUMBER E-25019
REGISTERED PROFESSIONAL ENGINEER

THIS SHEET HAS BEEN SIGNED, SEALED AND DATED ELECTRONICALLY

DATE PREPARED 8/24/2020

ROUTE	STATE
J	MO
DISTRICT	SHEET NO.
CD	3

COUNTY: GASCONADE
JOB NO.: J5S3176
CONTRACT ID.
PROJECT NO.
BRIDGE NO.

DATE	DESCRIPTION

MISSOURI HIGHWAYS AND TRANSPORTATION COMMISSION
105 WEST CAPITOL
JEFFERSON CITY, MO 65102
1-888-ASK-MODOT (1-888-275-6636)

LOCHNER
16105 W. 113th Street | Suite 107 | Lenexa, KS 66219
Certificate of Authority #F00727076

REV.

003_QU_01_J5P3176_l1.dgn 8:56:06 AM 8/24/2020

TYPE 2 ROCK BLANKET W/ PERMANENT EROSION CONTROL GEOTEXTILE							
SHEET	BRIDGE	LOCATION	SIDE	FURNISHING TYPE 2 ROCK BLANKET	PLACING TYPE 2 ROCK BLANKET	PERMANENT EROSION CONTROL GEOTEXTILE	REMARKS
				(CY)	(CY)	(SY)	
4 & 8	A8880	ROUTE J	LT.	185.6	185.6	302.0	EAST BRIDGE END
4 & 8	A8880	ROUTE J	RT.	162.7	162.7	271.0	EAST BRIDGE END
4 & 9	A8880	ROUTE J	LT.	182.2	182.2	298.5	WEST BRIDGE END
4 & 9	A8880	ROUTE J	RT.	116.7	116.7	195.9	WEST BRIDGE END
			TOTALS	647.2	647.2	1067.4	
			PAY TOTALS	647	647	1067	

PERMANENT PAVEMENT MARKINGS							
				WATERBORNE PAVEMENT MARKING PAINT, TYPE P BEADS			
SHEET	FROM STATION	TO STATION	LOCATION	4" SOLID WHITE EDGE LINE (L.F.)	4" SOLID YELLOW CENTERLINE (L.F.)	4" BROKEN YELLOW CENTERLINE (L.F.)	REMARKS
14	337+64	340+95	ROUTE J	331.7			LEFT EDGE LINE
14	337+64	340+95	ROUTE J		331.7	80.0	CENTERLINE ROUTE J
14	337+64	340+95	ROUTE J	331.7			RIGHT EDGE LINE
			TOTALS	663.4	331.7	80.0	
			PAY TOTALS	663	412		

TEMPORARY EROSION CONTROL								
SHEET	FROM STATION	TO STATION	LOCATION	SIDE	SILT FENCE	ROCK DITCH CHECK	TYPE C BERM	SEDIMENT REMOVAL
					(LF)	(LF)	(LF)	(CY)
13	337+61	338+56	ROUTE J	LT	99			1.0
13	337+60	338+44	ROUTE J	RT	85			0.9
13	337+60		ROUTE J	LT		10		1.0
13	338+45	338+56	ROUTE J	LT & RT			85	0.9
13	339+37	339+67	ROUTE J	LT & RT			105	1.1
13	339+67	340+97	ROUTE J	LT	135			1.4
13	339+38	340+97	ROUTE J	RT	159			1.6
				TOTALS	478	10	190	7.9
				PAY TOTALS	478	10	190	8

SEEDING						
SHEET	FROM STATION	TO STATION	LOCATION	SIDE	SEEDING (COOL SEASON MIXTURES)	TEMPORARY SEEDING AND MULCHING
					(AC)	(AC)
4	337+64	338+75	ROUTE J	LT	0.11	0.07
4	337+64	338+70	ROUTE J	RT	0.09	0.06
4	339+11	340+95	ROUTE J	LT	0.15	0.11
4	339+05	340+95	ROUTE J	RT	0.15	0.09
			TOTALS		0.50	0.33
			PAY TOTALS		1.0	0.3

SUMMARY OF QUANTITIES
SHEET 2 OF 3

STATE OF MISSOURI
KEITH LAWRENCE WETTER
NUMBER E-25019
REGISTERED PROFESSIONAL ENGINEER

THIS SHEET HAS BEEN SIGNED, SEALED AND DATED ELECTRONICALLY

DATE PREPARED 8/24/2020

ROUTE J | STATE MO

DISTRICT CD | SHEET NO. 3

COUNTY GASCONADE

JOB NO. J5S3176

CONTRACT ID.

PROJECT NO.

BRIDGE NO.

DESCRIPTION

DATE

MISSOURI HIGHWAYS AND TRANSPORTATION COMMISSION

105 WEST CAPITOL
JEFFERSON CITY, MO 65102
1-888-ASK-MODOT (1-888-275-6636)

LOCHNER
16105 W. 113th Street | Suite 107 | Lenexa, KS 66219
Certificate of Authority #F00727076

REV.

003_QU_02_J5P3176_I1.dgn 8:54:32 AM 8/24/2020

EFFECTIVE: 10-01-2019

SIGN	SIZE IN.	AREA SQ.FT.	QTY EACH	TOTAL AREA SQ.FT.	QTY RELOC EACH	TOTAL RELOC SQ.FT.	SIGN NUM.	DESCRIPTION
WARNING SIGNS								
W01-1L	48X48	16.00						TURN (SYMBOL LEFT ARROW)
W01-1R	48X48	16.00						TURN (SYMBOL RIGHT ARROW)
W01-2L	48X48	16.00						CURVE (SYMBOL LEFT ARROW)
W01-2R	48X48	16.00						CURVE (SYMBOL RIGHT ARROW)
W01-3L	48X48	16.00						REVERSE TURN (SYMBOL LEFT ARROW)
W01-3R	48X48	16.00						REVERSE TURN (SYMBOL RIGHT ARROW)
W01-4L	48X48	16.00						REVERSE CURVE (SYMBOL LEFT ARROW)
W01-4R	48X48	16.00						REVERSE CURVE (SYMBOL RIGHT ARROW)
W01-4bL	48X48	16.00						DOUBLE ARROW REVERSE CURVE (SYMBOL LT ARROWS)
W01-4bR	48X48	16.00						DOUBLE ARROW REVERSE CURVE (SYMBOL RT ARROWS)
W01-4cL	48X48	16.00						TRIPLE ARROW REVERSE CURVE (SYMBOL LT ARROWS)
W01-4cR	48X48	16.00						TRIPLE ARROW REVERSE CURVE (SYMBOL RT ARROWS)
W01-6	60X30	12.50						HORIZONTAL ARROW (SYMBOL)
W01-6a	72X36	18.00						HORIZ. ARROW (SYMBOL ON PERMANENT BARRICADE)
W01-7	60X30	12.50						DOUBLE HEAD HORIZONTAL ARROW (SYMBOL)
W01-7a	72X36	18.00						DOUBLE HEAD HORIZ. ARROW (SYMBOL ON PERM. BARR.)
W01-8	18X24	3.00						CHEVRON (SYMBOL)
W01-8a	30X36	7.50						CHEVRON (SYMBOL FOR DIVIDED HIGHWAYS)
W03-1	48X48	16.00						STOP AHEAD (SYMBOL)
W03-2	48X48	16.00						YIELD AHEAD (SYMBOL)
W03-3	48X48	16.00						SIGNAL AHEAD (SYMBOL)
W03-4	48X48	16.00						BE PREPARED TO STOP
W03-5	48X48	16.00						SPEED LIMIT AHEAD
W04-1L	48X48	16.00						MERGE (SYMBOL FROM LEFT)
W04-1R	48X48	16.00						MERGE (SYMBOL FROM RIGHT)
W04-1aL	48X48	16.00						MERGE (ARROW SYMBOL)
W04-1aR	48X48	16.00						MERGE (ARROW SYMBOL)
W05-1	48X48	16.00						ROAD/BRIDGE/RAMP NARROWS
W05-3	48X48	16.00						ONE LANE BRIDGE
W05-5	48X48	16.00						NARROW LANES
W06-1	48X48	16.00						DIVIDED HIGHWAY (SYMBOL)
W06-2	48X48	16.00						DIVIDED HIGHWAY END (SYMBOL)
W06-3	48X48	16.00						TWO WAY TRAFFIC (SYMBOL)
W07-3a	30X24	5.00						NEXT XX MILES (PLAQUE)
W08-1	48X48	16.00						BUMP
W08-2	48X48	16.00						DIP
W08-3	48X48	16.00						PAVEMENT ENDS
W08-4	48X48	16.00						SOFT SHOULDER
W08-5	48X48	16.00						SLIPPERY WHEN WET (SYMBOL)
W08-6	48X48	16.00						TRUCK CROSSING
W08-6c	48X48	16.00						TRUCK ENTRANCE
W08-7	36X36	9.00						LOOSE GRAVEL
W08-7a	36X36	9.00						FRESH OIL/LOOSE GRAVEL
W08-9	48X48	16.00						LOW SHOULDER
W08-11	48X48	16.00						UNEVEN LANES
W08-12	48X48	16.00						NO CENTER LINE
W08-15	48X48	16.00						GROOVED PAVEMENT
W08-15P	30X24	5.00						MOTORCYCLE (PLAQUE)
W08-17	48X48	16.00						SHOULDER DROP-OFF (SYMBOL)
W08-17P	30X24	5.00						SHOULDER DROP-OFF (PLAQUE)
W10-1	42RND.	9.62						RAILROAD CROSSING
W012-1	24X24	4.00						DOUBLE DOWN ARROW (SYMBOL)
W012-2	48X48	16.00						LOW CLEARANCE (SYMBOL)
W012-2X	24X18	3.00						LOW CLEARANCE (PLAQUE)
W012-2a	84X24	14.00						OVERHEAD LOW CLEARANCE (FEET AND INCHES)
W012-4	120X60	50.00						LOW CLEARANCE XX FT XX IN XX MILES AHEAD
W012-5	120X60	50.00						WIDTH RESTRICTION XX FT XX IN XX MILES AHEAD
W013-1	30X30	6.25						ADVISORY SPEED (PLAQUE)
W016-2	30X24	5.00						XXX FEET (PLAQUE)
W016-3	30X24	5.00						X MILE (PLAQUE)
W020-1	48X48	16.00	2	32			20A	ROAD/BRIDGE/RAMP WORK AHEAD
W020-2	48X48	16.00						DETOUR AHEAD
W020-3	48X48	16.00	2	32			20C	ROAD CLOSED AHEAD
W020-3a	48X48	16.00	2	32			20B	ROAD CLOSED - 500 FT
W020-4	48X48	16.00						ONE LANE ROAD AHEAD
W020-5	48X48	16.00						RIGHT/CENTER/LEFT LANE CLOSED AHEAD
W020-5a	48X48	16.00						2 RIGHT/CENTER/LEFT LANES CLOSED AHEAD
W020-6a	48X48	16.00						RIGHT/CENTER/LEFT LANE CLOSED
W020-7a	48X48	16.00						FLAGGER (SYMBOL) WITH FLAGS
W021-2	36X36	9.00						FRESH OIL
W021-5	48X48	16.00						SHOULDER WORK AHEAD
W022-1	48X48	16.00						BLASTING ZONE AHEAD
W022-2	42X36	10.50						TURN OFF 2-WAY RADIO AND PHONE
W022-3	42X36	10.50						END BLASTING ZONE
G022-1	21X15	2.19						WET PAINT (ARROW PIVOTS)

SIGN	SIZE IN.	AREA SQ.FT.	QTY EACH	TOTAL SQ.FT.	QTY RELOC EACH	TOTAL RELOC SQ.FT.	SIGN NUM.	DESCRIPTION
GUIDE SIGNS								
E05-1	36X48	12.00						GORE EXIT
E05-2	48X36	12.00						EXIT OPEN
E05-2a	48X36	12.00						EXIT CLOSED
G020-1	60X24	10.00						ROAD WORK NEXT XX MILES
G020-2	48X24	8.00						END ROAD WORK
G020-4	36X18	4.50						PILOT CAR FOLLOW ME
G020-4a	42X30	8.75						PILOT CAR IN USE WAIT & FOLLOW
G020-5aP	36X24	6.00						WORK ZONE (PLAQUE)
M04-8a	24X18	3.00						END DETOUR
M04-9L	48X36	12.00						DETOUR (LEFT ARROW)
M04-9R	48X36	12.00						DETOUR (RIGHT ARROW)
M04-9P	48X12	4.00						STREET NAME (PLAQUE)
M04-10L	48X18	6.00						DETOUR (ARROW LEFT)
M04-10R	48X18	6.00						DETOUR (ARROW RIGHT)
REGULATORY SIGNS								
R1-1	48X48	13.25						STOP
R1-2	48TRI.	6.93						YIELD
R1-2a	36X36	9.00						TO ONCOMING TRAFFIC (PLAQUE)
R1-3P	30X12	2.50						ALL WAY (PLAQUE)
R2-1	36X48	12.00						SPEED LIMIT XX
R3-1	48X48	16.00						NO RIGHT TURN (SYMBOL)
R3-2	48X48	16.00						NO LEFT TURN (SYMBOL)
R3-3	36X36	9.00						NO TURNS
R3-4	48X48	16.00						NO U-TURN (SYMBOL)
R3-7L	30X30	6.25						LEFT LANE MUST TURN LEFT
R3-7R	30X30	6.25						RIGHT LANE MUST TURN RIGHT
R4-1	36X48	12.00						DO NOT PASS
R4-2	36X48	12.00						PASS WITH CARE
R4-8a	36X48	12.00						KEEP LEFT (HORIZONTAL ARROW)
R4-7a	36X48	12.00						KEEP RIGHT (HORIZONTAL ARROW)
R5-1	30X30	6.25						DO NOT ENTER
R5-1a	36X24	6.00						WRONG WAY
R6-1L	54X18	6.75						ONE WAY ARROW (LEFT)
R6-1R	54X18	6.75						ONE WAY ARROW (RIGHT)
R6-2L	24X30	5.00						ONE WAY (LEFT)
R6-2R	24X30	5.00						ONE WAY (RIGHT)
R9-9	24X12	2.00						SIDEWALK CLOSED
R9-11L	24X18	3.00						SIDEWALK CLOSED AHEAD, (ARROW LEFT) CROSS HERE
R9-11R	24X18	3.00						SIDEWALK CLOSED AHEAD, (ARROW RIGHT) CROSS HERE
R10-6	24X36	6.00						STOP HERE ON RED (45° ARROW)
R11-2	48X30	10.00	2	20			29	ROAD CLOSED
R11-3a	60X30	12.50						ROAD CLOSED XX MILES AHEAD LOCAL TRAFFIC ONLY, 3, 1/2
R11-4	60X30	12.50						ROAD CLOSED TO THRU TRAFFIC
CONST-3A	60X48	20.00						FINE SIGN
CONST-3X	56X12	4.67						SPEEDING/PASSING (PLATE)
MISCELLANEOUS SIGNS								
CONST-5	60X8	3.33	2	7			56	POP (Completed as Promised)
CONST-5	96X48	32.00	2	64			56	POINT OF PRESENCE
CONST-7	48X24	8.00						RATE OUR WORK ZONE
CONST-7	72x36	18.00						RATE OUR WORK ZONE
CONST-8	48x36	12.00						WORK ZONE NO PHONE ZONE
SPECIAL	96X48	32.00	2	64	1	32	55A	PRE-CLOSURE STATIC SIGNING
SPECIAL	96X48	32.00	1	32	1	32	55B	PRE-CLOSURE STATIC SIGNING
SPECIAL	96X48	32.00	2	64			55C	PRE-CLOSURE STATIC SIGNING
SPECIAL	32X9	1.78	2	4				ON PLAQUES
SPECIAL	24X8	1.33	2	3				MONTH PLAQUES
SPECIAL	8X8	0.44	2	1				NUMBERS PLAQUES

	TOTAL
616-10.05 CONSTRUCTION SIGNS	355

	TOTAL
616-10.10 RELOCATED SIGNS	64

ITEM NUMBER	TOTAL EACH	DESCRIPTION
6122008		IMPACT ATTENUATOR 40 MPH (SAND BARRELS)
6122009		IMPACT ATTENUATOR 45 MPH (SAND BARRELS)
6122010		IMPACT ATTENUATOR 50 MPH (SAND BARRELS)
6122012		IMPACT ATTENUATOR 55 MPH (SAND BARRELS)
6122014		IMPACT ATTENUATOR 60 MPH (SAND BARRELS)
6122017		IMPACT ATTENUATOR 65 MPH (SAND BARRELS)
6122019		IMPACT ATTENUATOR 70 MPH (SAND BARRELS)
6122020		REPLACEMENT SAND BARREL
6122030		IMPACT ATTENUATOR (RELOCATION)
6123000A		TRUCK OR TRAILER MOUNTED ATTENUATOR (TMA)
6161007		SPEED LIMIT AND STROBE LIGHT ASSEMBLY
6161008	2	ADVANCED WARNING RAIL SYSTEM
6161009	4	FLAG ASSEMBLY
6161012		BUOYS (BOATS KEEP OUT)
6161013		BUOYS (NO WAKE)
6161014		SPECIAL SIGN ASSEMBLY (BOATS KEEP OUT)
6161024		CHANNELIZER (TRIM LINE) WITH LIGHT
6161025		CHANNELIZER (TRIM LINE)
6161030	4	TYPE III MOVEABLE BARRICADE
6161031	6	TYPE III MOVEABLE BARRICADE WITH LIGHT
6161033		DIRECTION INDICATOR BARRICADE
6161034		DIRECTION INDICATOR BARRICADE, WITH LIGHT
6161040		FLASHING ARROW PANEL
6161047		TYPE III OBJECT MARKER
6161052		WARNING LIGHT, TYPE B
6161055		SEQUENTIAL FLASHING WARNING LIGHT
6161070		TUBULAR MARKER
6161095		RADAR SPEED ADVISORY SYSTEM
6161096		CHANGEABLE MESSAGE SIGN, COMMISSION FURNISHED/RETAINED
6161098A		CHANGEABLE MESSAGE SIGN W/O COMM. INTERFACE, CONTRACTOR FURNISHED/RETAINED
6161099		CHANGEABLE MESSAGE SIGN WITH COMM. INTERFACE, CONTRACTOR FURNISHED/RETAINED
6162000A		WORK ZONE TRAFFIC SIGNAL SYSTEM
6162002		TEMPORARY LONG-TERM RUMBLE STRIPS
6162004		TEMPORARY SHORT-TERM RUMBLE STRIPS
6173600D		TEMPORARY TRAFFIC BARRIER CONTRACTOR FURNISHED/RETAINED
6173602B		TEMPORARY TRAFFIC BARRIER CONTRACTOR FURNISHED/COMMISSION RETAINED
6174000A		TEMP. TRAFFIC BARRIER HEIGHT TRANSITION
6175010A		RELOCATING TEMPORARY TRAFFIC BARRIER
6176000B		TEMPORARY TRAFFIC BARRIER COMMISSION FURNISHED/RETAINED
6177000B		TEMP. TRAFFIC BARRIER HEIGHT TRANSITION COMMISSION FURNISHED/RETAINED
6208064A		TEMPORARY RAISED PAVEMENT MARKER
9029400		TEMPORARY TRAFFIC SIGNALS
9029401		TEMPORARY TRAFFIC SIGNALS AND LIGHTING

SUMMARY OF QUANTITIES
SHEET 3 OF 3

STATE OF MISSOURI
KEITH LAWRENCE WETTER
NUMBER E-25019
REGISTERED PROFESSIONAL ENGINEER

THIS SHEET HAS BEEN SIGNED, SEALED AND DATED ELECTRONICALLY

DATE PREPARED 7/2/2020

ROUTE	STATE
J	MO
DISTRICT	SHEET NO.
CD	3

COUNTY GASCONADE

JOB NO. J5S3176

CONTRACT ID.

PROJECT NO.

BRIDGE NO.

DESCRIPTION	DATE

MISSOURI HIGHWAYS AND TRANSPORTATION COMMISSION
105 WEST CAPITOL
JEFFERSON CITY, MO 65102
1-888-ASK-MODOT (1-888-275-6636)

LOCHNER
16105 W. 113th Street | Suite 107 | Lenexa, KS 66219
Certificate of Authority #F00727076

REV.

003_QU_03_J5P3176_I1.dgn 12:13:19 PM 7/2/2020

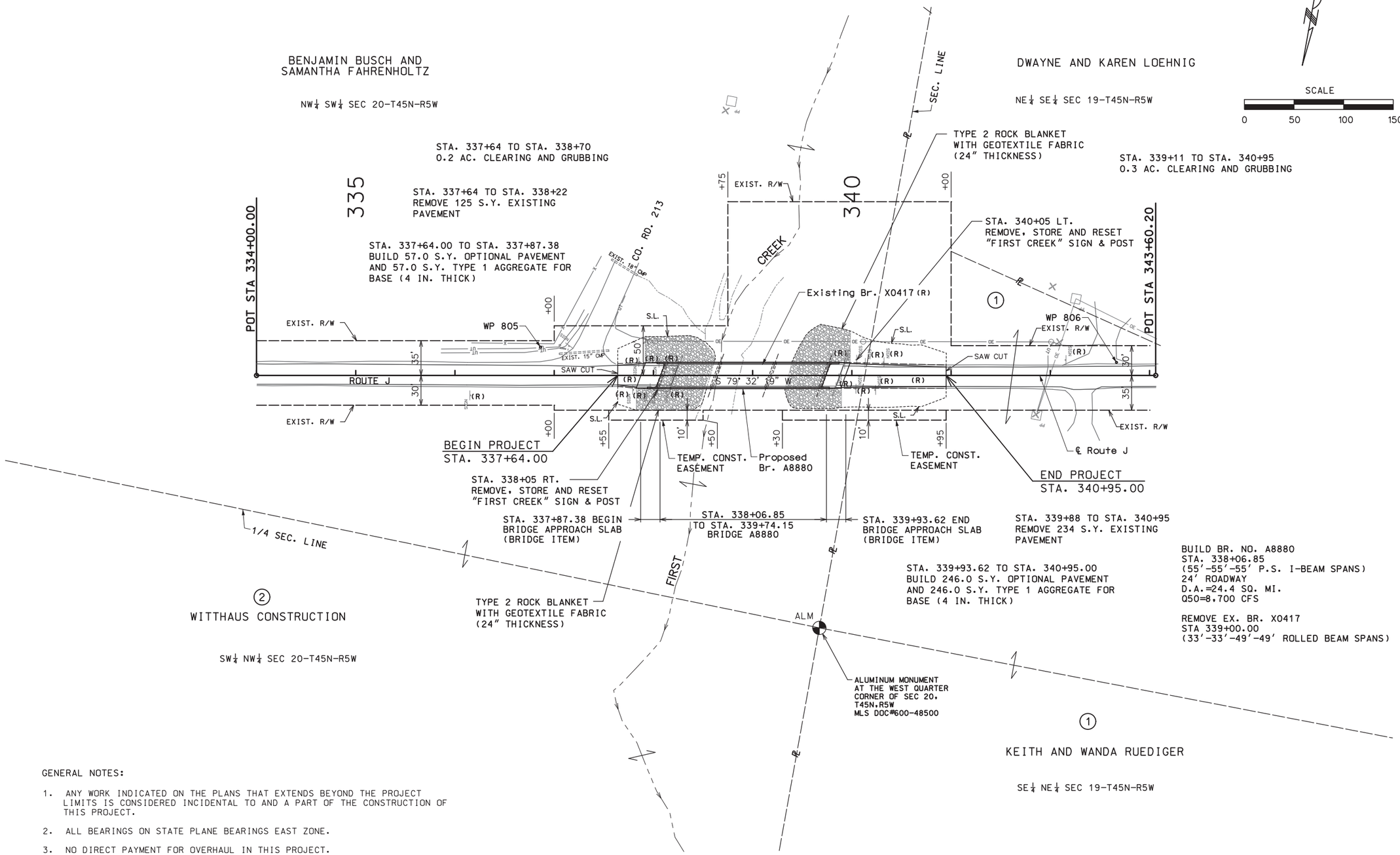

GENERAL NOTES:

1. ANY WORK INDICATED ON THE PLANS THAT EXTENDS BEYOND THE PROJECT LIMITS IS CONSIDERED INCIDENTAL TO AND A PART OF THE CONSTRUCTION OF THIS PROJECT.
2. ALL BEARINGS ON STATE PLANE BEARINGS EAST ZONE.
3. NO DIRECT PAYMENT FOR OVERHAUL IN THIS PROJECT.
4. RIGHT OF WAY LIMITS FOR THIS PROJECT EXTEND FROM STATION 337+64.00 TO STATION 340+95.00, A DISTANCE OF 0.063 MILE.

PLAN/PROFILE SHEET
SHEET 1 OF 2

STATE OF MISSOURI
KEITH LAWRENCE WETTER
NUMBER E-25019
REGISTERED PROFESSIONAL ENGINEER

THIS SHEET HAS BEEN SIGNED, SEALED AND DATED ELECTRONICALLY

DATE PREPARED	
7/2/2020	
ROUTE	STATE
J	MO
DISTRICT	SHEET NO.
CD	4
COUNTY	
GASCONADE	
JOB NO.	
J5S3176	
CONTRACT ID.	
PROJECT NO.	
BRIDGE NO.	

DESCRIPTION

DATE

MISSOURI HIGHWAYS AND TRANSPORTATION COMMISSION
105 WEST CAPITOL
JEFFERSON CITY, MO 65102
1-888-ASK-MODOT (1-888-275-6636)

LOCHNER
16105 W. 113th Street | Suite 107 | Lenexa, KS 66219
Certificate of Authority #F00727076

REV.

004_PP_01_J5S3176_I50.dgn 12:13:47 PM 7/2/2020

CUT = 448.8 C.Y.
(CLASS A EXCAVATION = 448.8 C.Y.)
FILL = 66.6 C.Y.
(COMPACTED EMBANKMENT = 66.6 C.Y.)
EMBANKMENT IN PLACE = 0 C.Y.
COMPACTING IN CUT = 0.4 STA.

CUT = 59.2 C.Y.
(CLASS A EXCAVATION = 59.2 C.Y.)
FILL = 594.5 C.Y.
(COMPACTED EMBANKMENT = 594.5 C.Y.)
EMBANKMENT IN PLACE = 318.4 C.Y.
COMPACTING IN CUT = 1.2 STA.

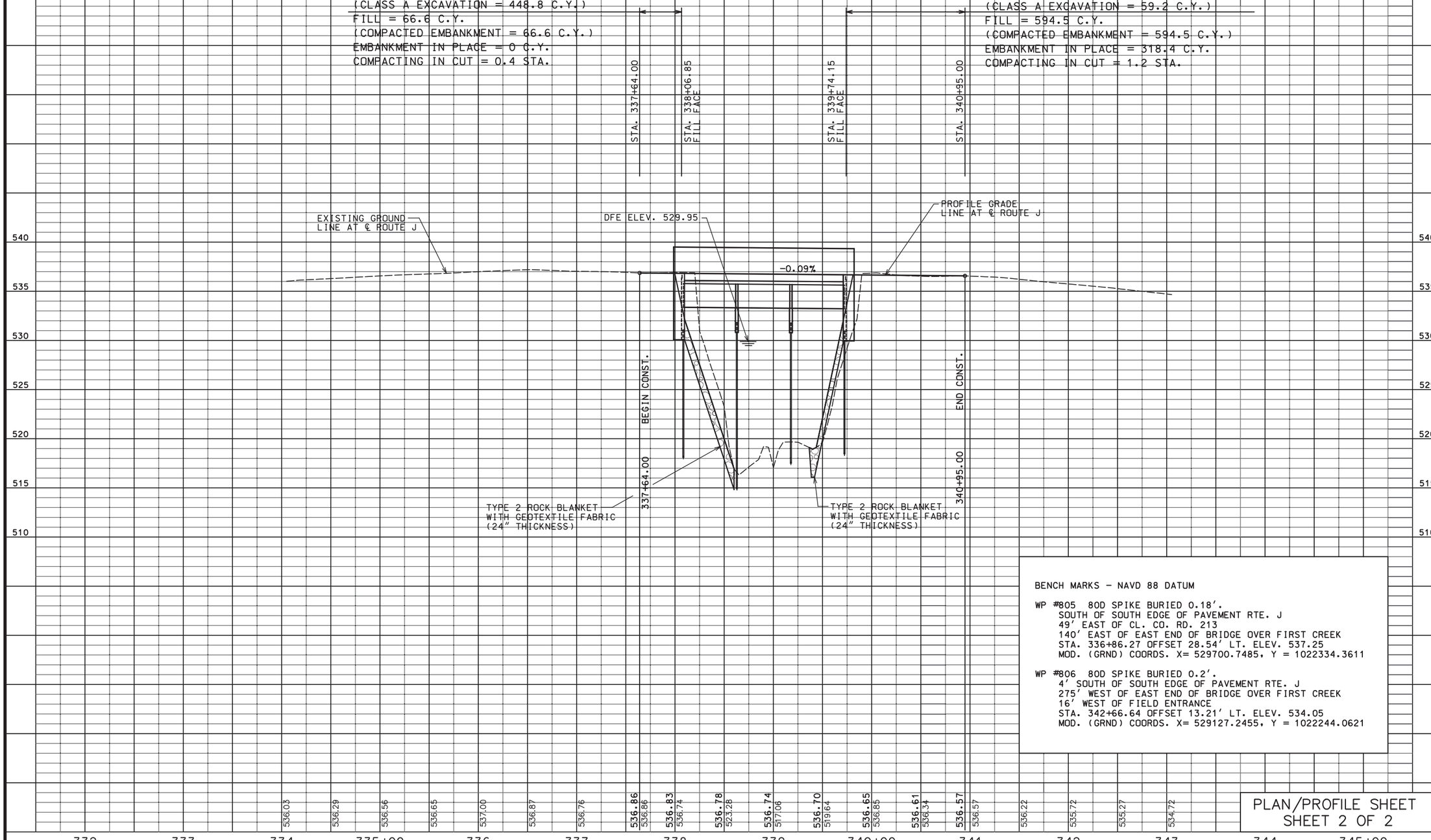

BENCH MARKS - NAVD 88 DATUM

WP #805 80D SPIKE BURIED 0.18'.
SOUTH OF SOUTH EDGE OF PAVEMENT RTE. J
49' EAST OF CL. CO. RD. 213
140' EAST OF EAST END OF BRIDGE OVER FIRST CREEK
STA. 336+86.27 OFFSET 28.54' LT. ELEV. 537.25
MOD. (GRND) COORDS. X= 529700.7485, Y = 1022334.3611

WP #806 80D SPIKE BURIED 0.2'.
4' SOUTH OF SOUTH EDGE OF PAVEMENT RTE. J
275' WEST OF EAST END OF BRIDGE OVER FIRST CREEK
16' WEST OF FIELD ENTRANCE
STA. 342+66.64 OFFSET 13.21' LT. ELEV. 534.05
MOD. (GRND) COORDS. X= 529127.2455, Y = 1022244.0621

PLAN/PROFILE SHEET
SHEET 2 OF 2

STATE OF MISSOURI
KEITH LAWRENCE WETTER
NUMBER E-25019
REGISTERED PROFESSIONAL ENGINEER

THIS SHEET HAS BEEN SIGNED, SEALED AND DATED ELECTRONICALLY

DATE PREPARED 7/2/2020

ROUTE	STATE
J	MO
DISTRICT	SHEET NO.
CD	5

COUNTY: GASCONADE
JOB NO.: J5S3176
CONTRACT ID.
PROJECT NO.
BRIDGE NO.

DESCRIPTION
DATE

MISSOURI HIGHWAYS AND TRANSPORTATION COMMISSION
105 WEST CAPITOL
JEFFERSON CITY, MO 65102
1-888-ASK-MODOT (1-888-275-6636)

LOCHNER
16105 W. 113th Street | Suite 107 | Lenexa, KS 66219
Certificate of Authority #F00727076

REV.

005_PP_02_J5S3176_I50.dgn 12:14:12 PM 7/2/2020

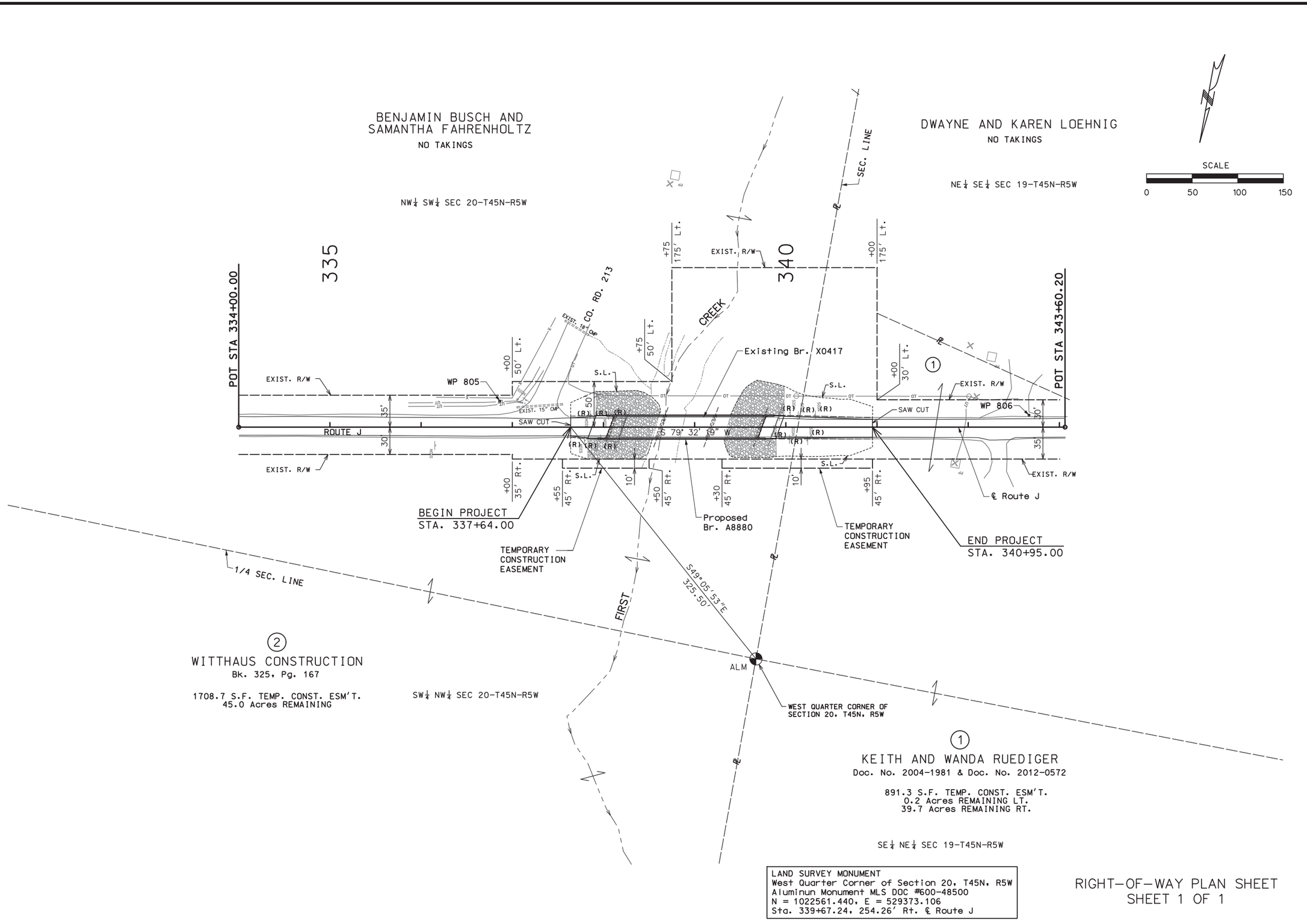

LAND SURVEY MONUMENT
West Quarter Corner of Section 20, T45N, R5W
Aluminun Monument MLS DOC #600-48500
N = 1022561.440, E = 529373.106
Sta. 339+67.24, 254.26' Rt. ℄ Route J

RIGHT-OF-WAY PLAN SHEET
SHEET 1 OF 1

STATE OF MISSOURI
KEITH LAWRENCE WETTER
NUMBER E-25019
REGISTERED PROFESSIONAL ENGINEER

THIS SHEET HAS BEEN SIGNED, SEALED AND DATED ELECTRONICALLY

DATE PREPARED	
7/2/2020	
ROUTE	STATE
J	MO
DISTRICT	SHEET NO.
CD	6
COUNTY	
GASCONADE	
JOB NO.	
J5S3176	
CONTRACT ID.	
PROJECT NO.	
BRIDGE NO.	

DESCRIPTION

DATE

MISSOURI HIGHWAYS AND TRANSPORTATION COMMISSION
105 WEST CAPITOL
JEFFERSON CITY, MO 65102
1-888-ASK-MODOT (1-888-275-6636)

LOCHNER
16105 W. 113th Street | Suite 107 | Lenexa, KS 66219
Certificate of Authority #F00727076

REV.

006_RW_01_J5S3176_I50.dgn 3:10:56 PM 7/2/2020

REFERENCE POINTS

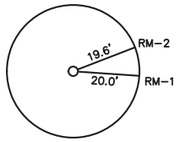

W.P. 805 - 80D SPIKE
MODIFIED STATE PLANE COORDINATE
N: 1022334.3611
E: 529700.7485
ELEVATION: 537.25
℄ RTE. J STA. 336+86.27
OFFSET 28.54' LT.

RM-1: 20.0' EAST OF TOP CENTER OF 15" CMP
RM-2: 19.6' NORTHEAST OF TELEPHONE RISER

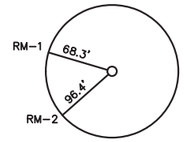

W.P. 806 - 80D SPIKE
MODIFIED STATE PLANE COORDINATE
N: 1022244.0621
E: 529127.2455
ELEVATION: 534.05
℄ RTE. J STA. 342+66.64
OFFSET 13.21' LT.

RM-1: 68.3' WEST SOUTHWEST OF POWER POLE
RM-2: 96.4' NORTHWEST OF POWER POLE

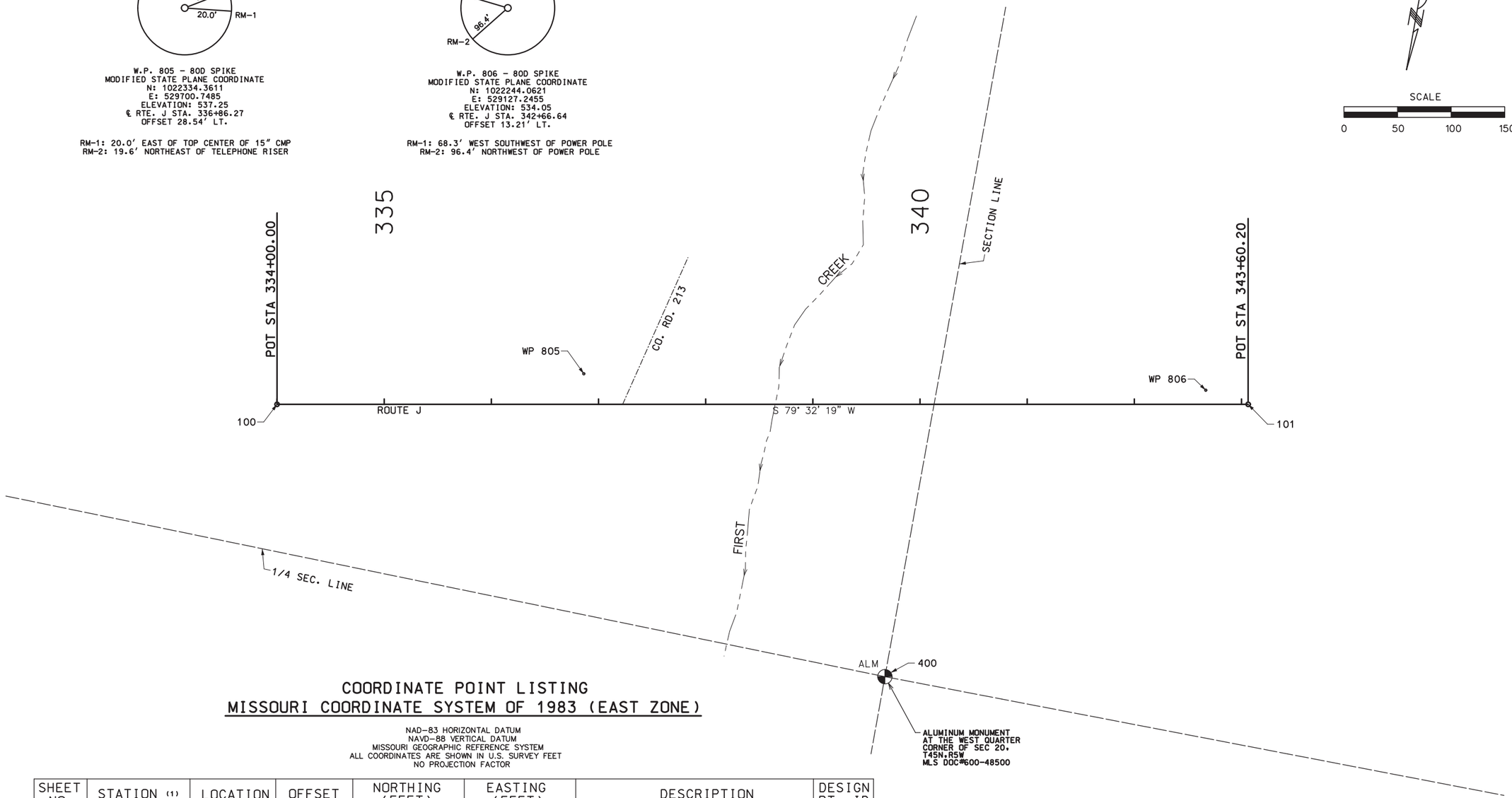

COORDINATE POINT LISTING
MISSOURI COORDINATE SYSTEM OF 1983 (EAST ZONE)

NAD-83 HORIZONTAL DATUM
NAVD-88 VERTICAL DATUM
MISSOURI GEOGRAPHIC REFERENCE SYSTEM
ALL COORDINATES ARE SHOWN IN U.S. SURVEY FEET
NO PROJECTION FACTOR

SHEET NO.	STATION (1)	LOCATION	OFFSET	NORTHING (FEET)	EASTING (FEET)	DESCRIPTION	DESIGN PT. ID
4	334+00.00	℄ ROUTE J	0.00'	1,022,414.4066	529,977.0795	POINT OF TANGENT ON ROUTE J	100
4	337+64.00	℄ ROUTE J	0.00'	1,022,348.3137	529,619.1302	BEGIN PROJECT POINT ON ROUTE J	-
4	340+95.00	℄ ROUTE J	0.00'	1,022,288.2129	529,293.6323	END PROJECT POINT ON ROUTE J	-
4	343+60.20	℄ ROUTE J	0.00'	1,022,249.8645	529,085.9430	POINT OF TANGENT ON ROUTE J	101
4	339+67.24	℄ ROUTE J	254.26' RT.	1,022,561.4404	529,373.1062	ALUMINUM MONUMENT AT SECTION CORNER	400
4	336+86.27	℄ ROUTE J	28.54' LT.	1,022,334.3611	529,700.7485	CONTROL POINT AND BENCHMARK NO. 805	805
4	342+66.64	℄ ROUTE J	13.21' LT.	1,022,244.0621	529,127.2455	CONTROL POINT AND BENCHMARK NO. 806	806
.	.	.	.	.	.	.	
.	.	.	.	.	.	.	
.	.	.	.	.	.	.	.
.	.	.	.	.	.	.	.

REFERENCE POINT AND
COORDINATE POINTS SHEET
SHEET 1 OF 1

STATE OF MISSOURI
KEITH LAWRENCE WETTER
NUMBER E-25019
REGISTERED PROFESSIONAL ENGINEER

THIS SHEET HAS BEEN SIGNED, SEALED AND DATED ELECTRONICALLY

DATE PREPARED 7/2/2020

ROUTE	STATE
J	MO
DISTRICT	SHEET NO.
CD	7

COUNTY GASCONADE
JOB NO. J5S3176
CONTRACT ID.
PROJECT NO.
BRIDGE NO.

DATE	DESCRIPTION

MISSOURI HIGHWAYS AND TRANSPORTATION COMMISSION
105 WEST CAPITOL
JEFFERSON CITY, MO 65102
1-888-ASK-MODOT (1-888-275-6636)

LOCHNER
16105 W. 113th Street | Suite 107 | Lenexa, KS 66219
Certificate of Authority #F00727076

REV.

007_RP_01_J5S3176_I50.dgn 12:15:50 PM 7/2/2020

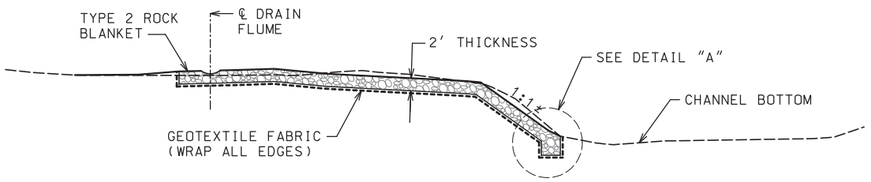

SECTION A-A

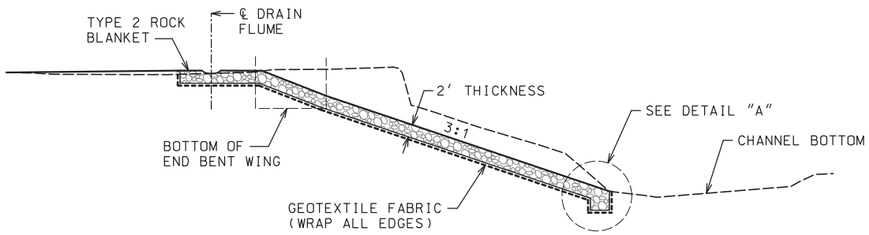

SECTION B-B

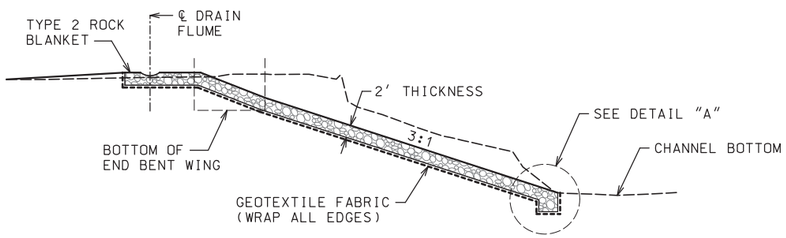

SECTION C-C

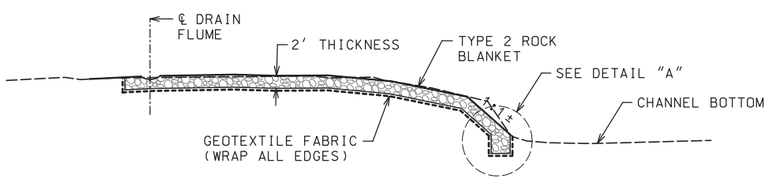

SECTION D-D

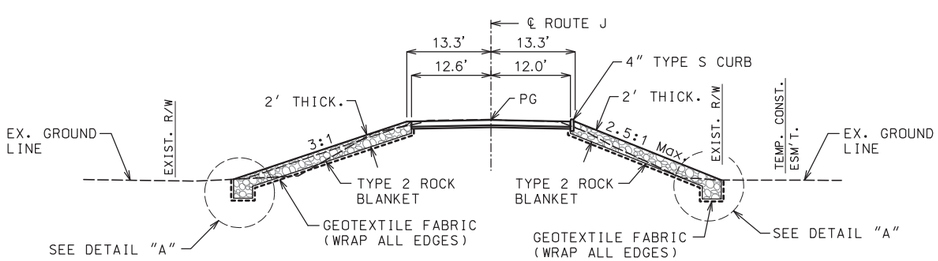

SECTION E-E

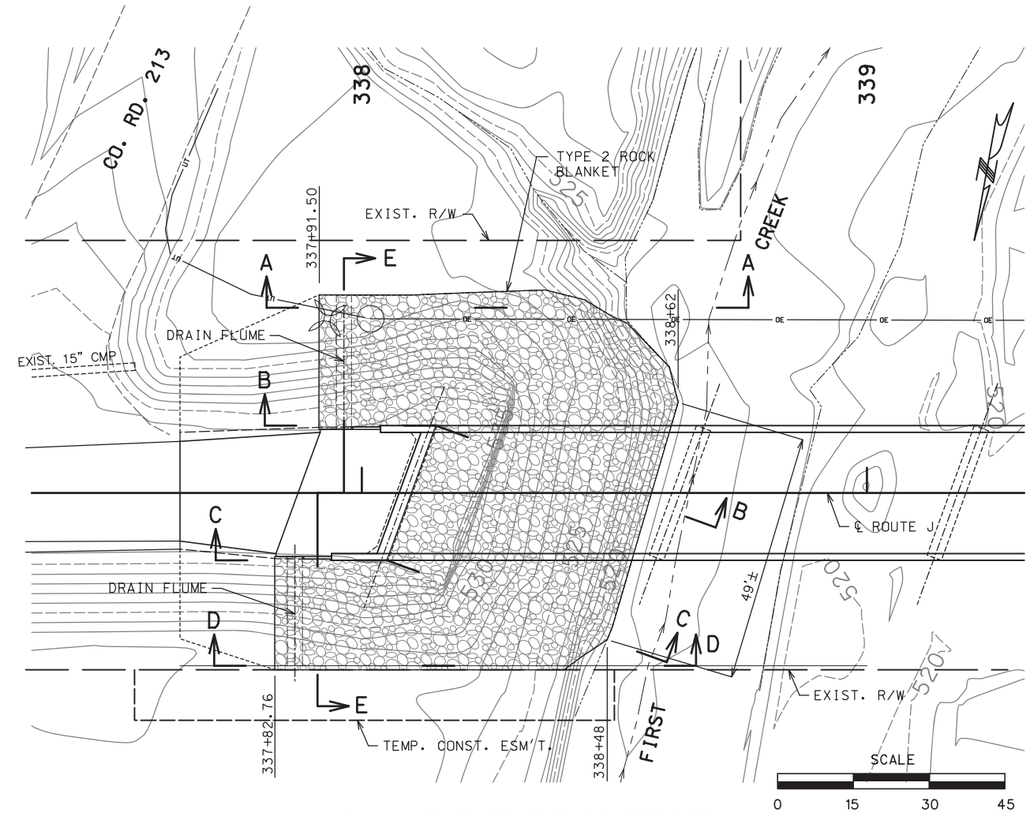

PLAN AT EAST END OF BRIDGE

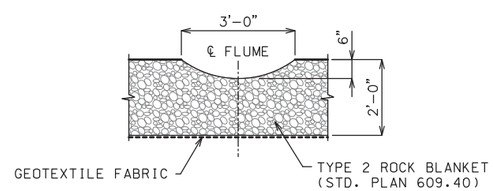

DRAIN FLUME DETAIL

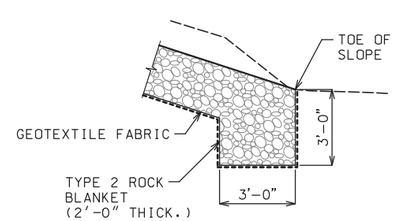

DETAIL "A"

NOTES:

SEE STD. PLANS 609.40 FOR ADDITION INFORMATION ON DRAIN FLUME, SHOULDER PAVING AND FILL SLOPES AT BRIDGE ENDS (MINOR ROAD).

FOR DETAILS OF BRIDGE APPROACH SLAB (MINOR ROAD), SEE BRIDGE PLANS.

CONSTRUCT DRAIN FLUMES AND ROCK BLANKET AS SHOWN ON THE PLANS.

ANY EXCAVATION REQUIRED FOR THE INSTALLATION OF ROCK BLANKET IS INCIDENTAL AND NO DIRECT PAYMENT WILL BE MADE.

MATERIALS EXCAVATED DURING THE INSTALLATION OF THE ROCK BLANKET MAY BE USED TO COMPLETE THE CONSTRUCTION OF EMBANKMENT IN PLACE.

PAYMENT FOR FURNISHING ALL MATERIALS, LABOR NECESSARY TO CONSTRUCT THE DRAIN FLUMES, INCLUDING THE PERMANENT EROSION CONTROL GEOTEXTILE, COMPLETE-IN-PLACE, WILL BE CONSIDERED COMPLETELY COVERED BY THE CONTRACT UNIT PRICE FOR TYPE 2 ROCK BLANKET.

LEGEND

TYPE 2 ROCK BLANKET

GEOTEXTILE FABRIC

SPECIAL SHEET
TYPE 2 ROCK BLANKET
SHEET 1 OF 2

STATE OF MISSOURI
KEITH LAWRENCE WETTER
NUMBER E-25019
REGISTERED PROFESSIONAL ENGINEER

THIS SHEET HAS BEEN SIGNED, SEALED AND DATED ELECTRONICALLY

DATE PREPARED	
7/2/2020	
ROUTE	STATE
J	MO
DISTRICT	SHEET NO.
CD	8
COUNTY	
GASCONADE	
JOB NO.	
J5S3176	
CONTRACT ID.	
PROJECT NO.	
BRIDGE NO.	

DESCRIPTION

DATE

MISSOURI HIGHWAYS AND TRANSPORTATION COMMISSION

105 WEST CAPITOL
JEFFERSON CITY, MO 65102
1-888-ASK-MODOT (1-888-275-6636)

LOCHNER
16105 W. 113th Street | Suite 107 | Lenexa, KS 66219
Certificate of Authority #F00727076

REV.

008_SS_01_J5P3176_l15.dgn 12:18:13 PM 7/2/2020

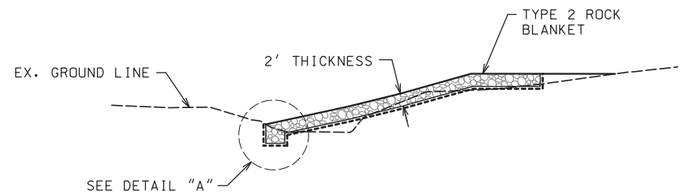

SECTION A–A

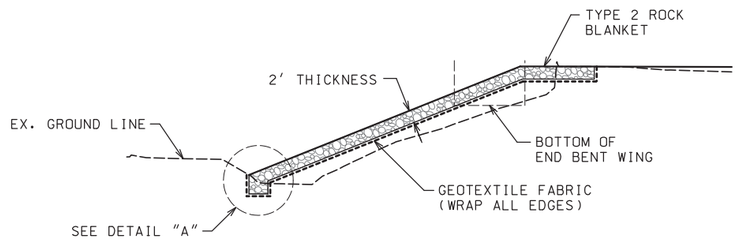

SECTION B–B

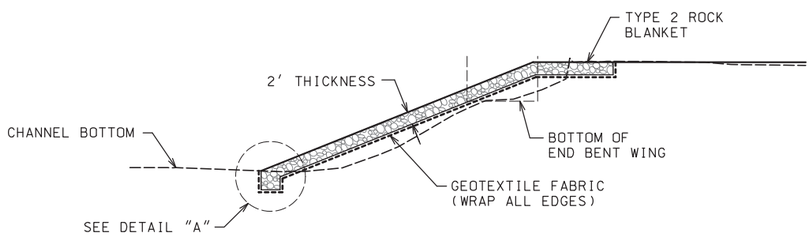

SECTION C–C

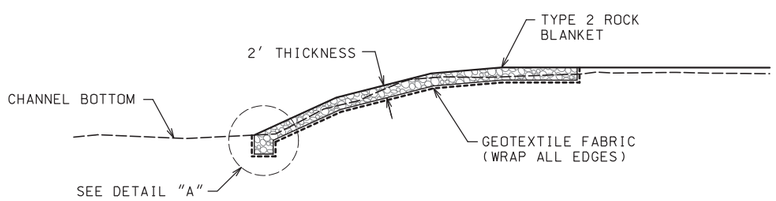

SECTION D–D

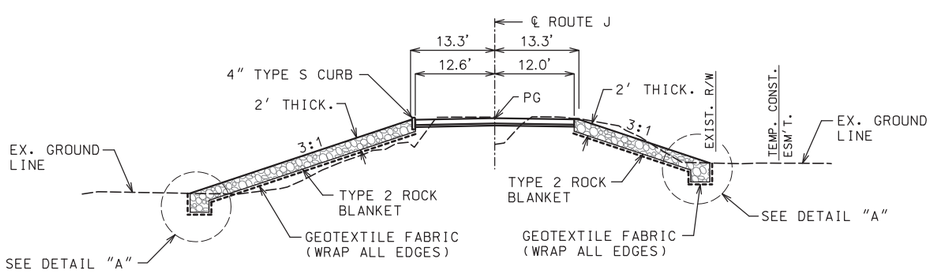

SECTION E–E

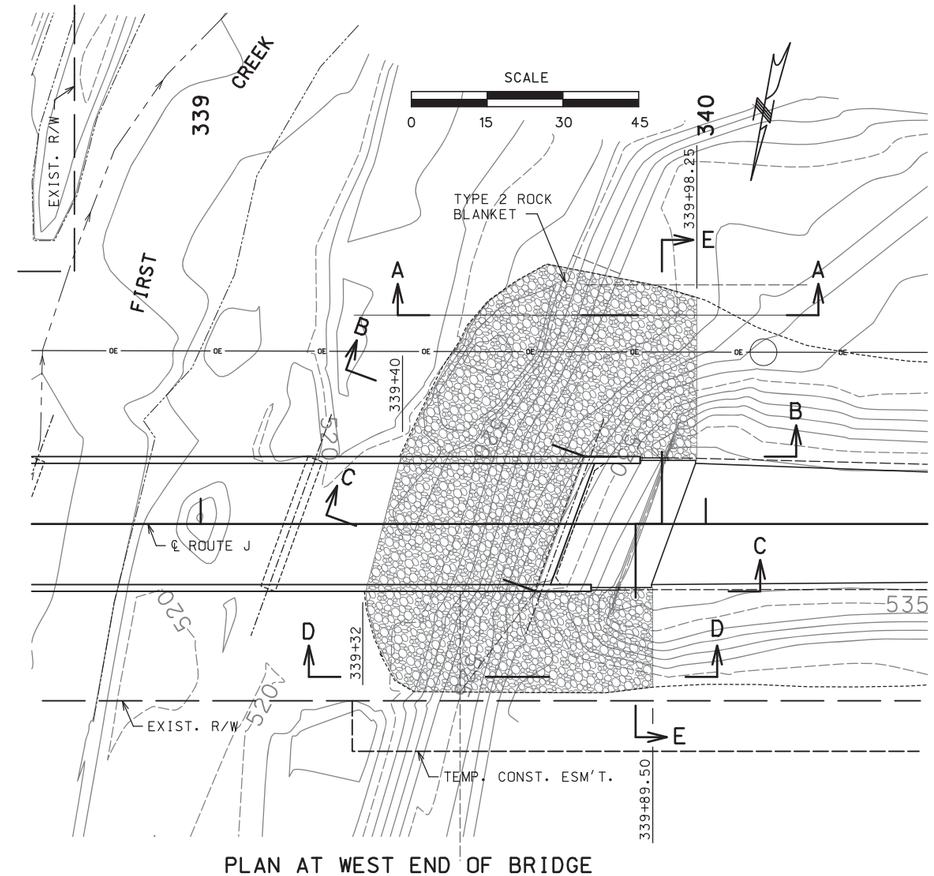

PLAN AT WEST END OF BRIDGE

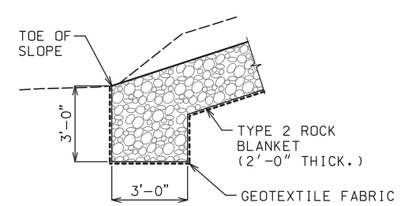

DETAIL "A"

LEGEND

TYPE 2 ROCK BLANKET

GEOTEXTILE FABRIC

NOTES:

SEE STD. PLANS 609.40 FOR ADDITION INFORMATION ON DRAIN FLUME, SHOULDER PAVING AND FILL SLOPES AT BRIDGE ENDS (MINOR ROAD).

FOR DETAILS OF BRIDGE APPROACH SLAB (MINOR ROAD), SEE BRIDGE PLANS.

CONSTRUCT DRAIN FLUMES AND ROCK BLANKET AS SHOWN ON THE PLANS.

ANY EXCAVATION REQUIRED FOR THE INSTALLATION OF ROCK BLANKET IS INCIDENTAL AND NO DIRECT PAYMENT WILL BE MADE.

MATERIALS EXCAVATED DURING THE INSTALLATION OF THE ROCK BLANKET MAY BE USED TO COMPLETE THE CONSTRUCTION OF EMBANKMENT IN PLACE.

PAYMENT FOR FURNISHING ALL MATERIALS, LABOR NECESSARY TO CONSTRUCT THE DRAIN FLUMES, INCLUDING THE PERMANENT EROSION CONTROL GEOTEXTILE, COMPLETE-IN-PLACE, WILL BE CONSIDERED COMPLETELY COVERED BY THE CONTRACT UNIT PRICE FOR TYPE 2 ROCK BLANKET.

SPECIAL SHEET
TYPE 2 ROCK BLANKET
SHEET 2 OF 2

STATE OF MISSOURI
KEITH LAWRENCE WETTER
NUMBER E-25019
REGISTERED PROFESSIONAL ENGINEER

THIS SHEET HAS BEEN SIGNED, SEALED AND DATED ELECTRONICALLY

DATE PREPARED	
7/2/2020	
ROUTE	STATE
J	MO
DISTRICT	SHEET NO.
CD	9
COUNTY	
GASCONADE	
JOB NO.	
J5S3176	
CONTRACT ID.	
PROJECT NO.	
BRIDGE NO.	

DESCRIPTION

DATE

MISSOURI HIGHWAYS AND TRANSPORTATION COMMISSION
105 WEST CAPITOL
JEFFERSON CITY, MO 65102
1-888-ASK-MODOT (1-888-275-6636)

LOCHNER
16105 W. 113th Street | Suite 107 | Lenexa, KS 66219
Certificate of Authority #F00727076

REV.

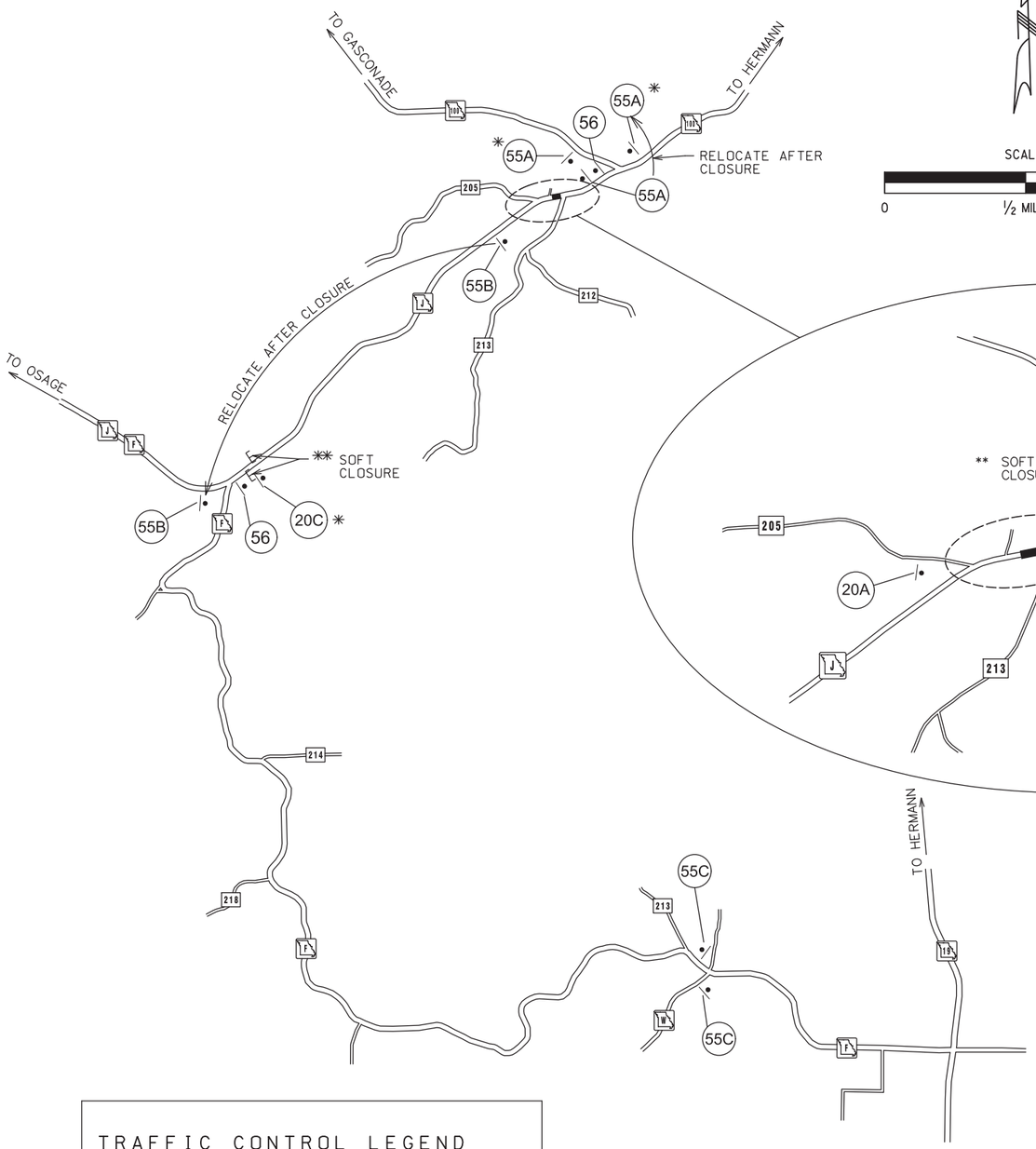

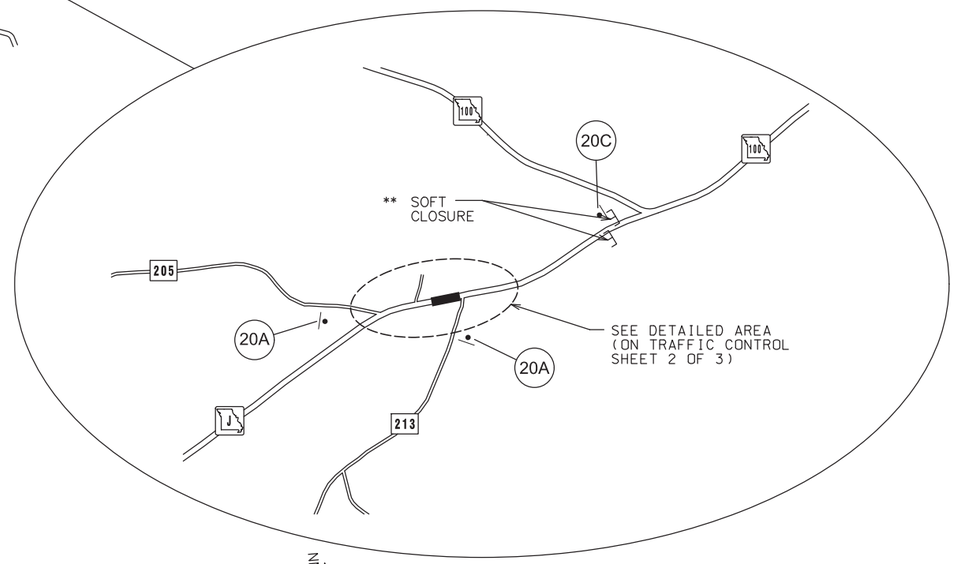

SCALE

0 ½ MILE 1 MILE

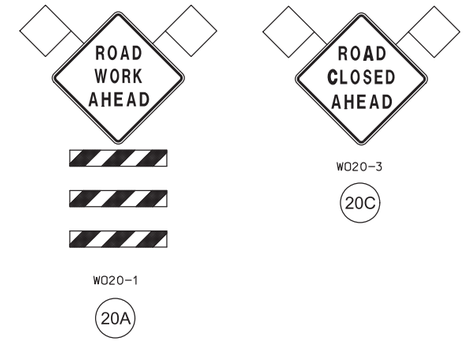

POST-CLOSURE SIGNS
PLAQUES REMOVED

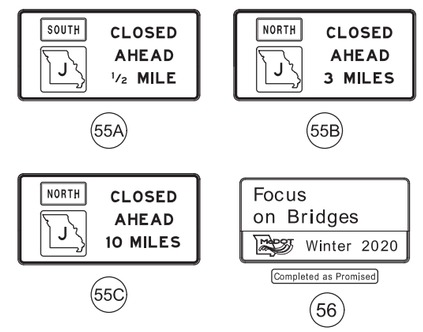

PRE-CLOSURE SIGNS
WITH PLAQUES

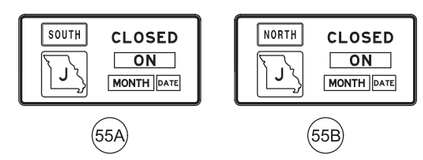

NOTES:

INSTALL PRE-CLOSURE SIGNS 55A & 55B WITH PLAQUES A MINIMUM OF 2 WEEKS PRIOR TO CLOSURE.

WHEN BRIDGE CLOSURE OCCURS - REMOVE SPECIAL SIGN PLAQUES AND RELOCATE NOTED SIGNS.

ALL SIGNS SHALL BE SPACED AT 500 FEET UNLESS OTHERWISE NOTED.

* LOCATE SIGNS 100 FEET FROM INTERSECTION UNLESS OTHERWISE INSTRUCTED BY THE ENGINEER.

** A SOFT CLOSURE CONSISTS OF 2 MOVABLE BARRICADES STAGGERED 100 FEET APART, ONE BARRICADE IN EACH LANE WITH SIGN 20C BEHIND LEADING BARRICADE. LOCAL TRAFFIC CAN SWERVE BETWEEN THE BARRICADES.

USE IN PLACE ALL SIGNS WHICH DO NOT CONFLICT WITH THIS PLAN. COVER OR REMOVE CONFLICTING SIGNS. (NO DIRECT PAY)

EXACT SIGN LOCATIONS MAY BE MODIFIED TO BETTER FIT DIFFERING FIELD CONDITIONS, AS APPROVED BY THE ENGINEER.

TRAFFIC CONTROL LEGEND

- SIGN (SINGLE SIDED)
- E TYPE III MOVEABLE BARRICADE
- WORK AREA

TRAFFIC CONTROL SHEET
SHEET 1 OF 3

STATE OF MISSOURI
KEITH LAWRENCE WETTER
NUMBER E-25019
REGISTERED PROFESSIONAL ENGINEER

THIS SHEET HAS BEEN SIGNED, SEALED AND DATED ELECTRONICALLY

DATE PREPARED	
7/2/2020	
ROUTE	STATE
J	MO
DISTRICT	SHEET NO.
CD	10
COUNTY	
GASCONADE	
JOB NO.	
J5S3176	
CONTRACT ID.	
PROJECT NO.	
BRIDGE NO.	

DESCRIPTION

DATE

MISSOURI HIGHWAYS AND TRANSPORTATION COMMISSION
105 WEST CAPITOL
JEFFERSON CITY, MO 65102
1-888-ASK-MODOT (1-888-275-6636)

LOCHNER
16105 W. 113th Street | Suite 107 | Lenexa, KS 66219
Certificate of Authority #F00727076

REV.

010_TC_01_J5S3176_I1.dgn 12:20:41 PM 7/2/2020

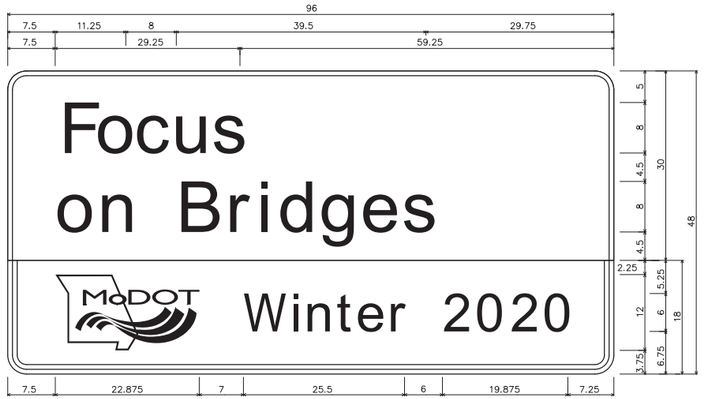

CONST-5-96 SH-FLAT SHEET; 3.000" Radius, 0.750" Border, White on Blue;
[Focus] D; [on Bridges] D; [ ] Black E;
3.000" Radius, 0.750" Border, 0.750" Indent, Blue on White;
[Winter 2020] D;
Table of letter and object lefts.

F 7.500	o 13.250	c 19.375	u 26.000	s 32.375							
o 7.500	n 14.250	B 26.750	r 34.500	i 39.500	d 42.750	g 49.375	e 55.875	s 61.750			
7.500	W 37.375	i 43.875	n 46.875	t 51.625	e 55.375	r 60.250	2 68.875	0 74.000	2 79.375	0 84.500	

SIGN NO.	CONST-5-POP
STATION	-
ROADWAY	ROUTE J

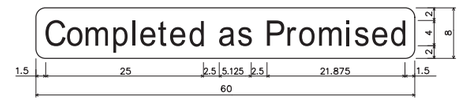

CONST-5P-60 SHF-FLAT SHEET FLUORESCENT; 1.500" Radius, No border, Yellow;
[Completed as Promised] Black D 65} spacing;
Table of letter and object lefts.

C 1.500	o 4.875	m 7.875	p 12.375	I 15.375	e 16.625	t 19.375	e 21.500	d 24.250	a 29.000	s 31.875		
	P 36.625	r 39.875	o 41.875	m 44.875	i 49.500	s 50.750	e 53.500	d 56.250				

TRAFFIC CONTROL SIGNS

W020-3a

20B

R11-2

29

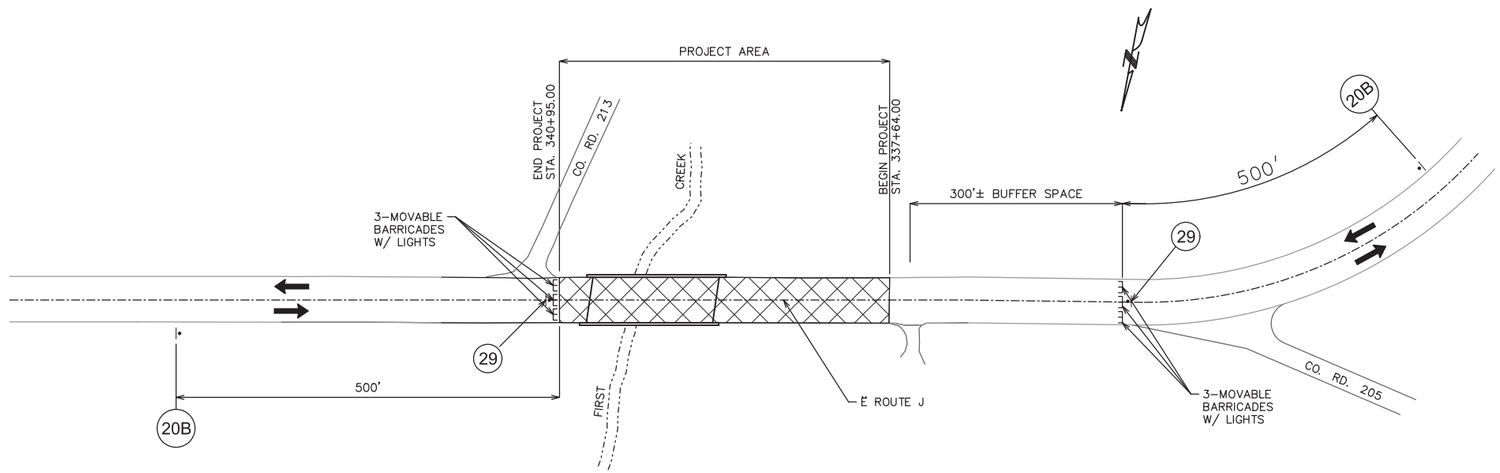

DETAILED AREA

TRAFFIC CONTROL LEGEND

- SIGN (SINGLE SIDED)
- E TYPE III MOVEABLE BARRICADE
- WORK AREA

TRAFFIC CONTROL SHEET
SHEET 2 OF 3

STATE OF MISSOURI
KEITH LAWRENCE WETTER
NUMBER E-25019
REGISTERED PROFESSIONAL ENGINEER

THIS SHEET HAS BEEN SIGNED, SEALED AND DATED ELECTRONICALLY

DATE PREPARED
7/2/2020

ROUTE	STATE
J	MO
DISTRICT	SHEET NO.
CD	11

COUNTY
GASCONADE

JOB NO.
J5S3176

CONTRACT ID.

PROJECT NO.

BRIDGE NO.

DESCRIPTION

DATE

MISSOURI HIGHWAYS AND TRANSPORTATION COMMISSION
105 WEST CAPITOL
JEFFERSON CITY, MO 65102
1-888-ASK-MODOT (1-888-275-6636)

LOCHNER
16105 W. 113th Street | Suite 107 | Lenexa, KS 66219
Certificate of Authority #F00727076

REV.

011_TC_02_J5P3176_I1.dgn 12:21:09 PM 7/2/2020

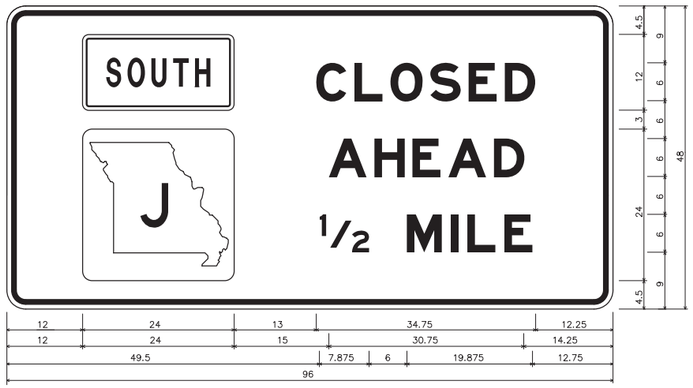

M04-13-96 SHR4L1; 3.000" Radius, 1.250" Border, 0.750" Indent, Black on Orange
[CLOSED] E Mod; [AHEAD] E Mod; [½ MILE] E Mod;
Table of letter and object lefts.

SOUTH 12.000	C 49.000	L 55.000	O 60.750	S 67.000	E 73.250	D 79.000
12.000	A 51.000	H 58.250	E 64.500	A 69.750	D 77.000	
1/2 49.500	M 63.375	I 70.375	L 73.125	E 78.875		

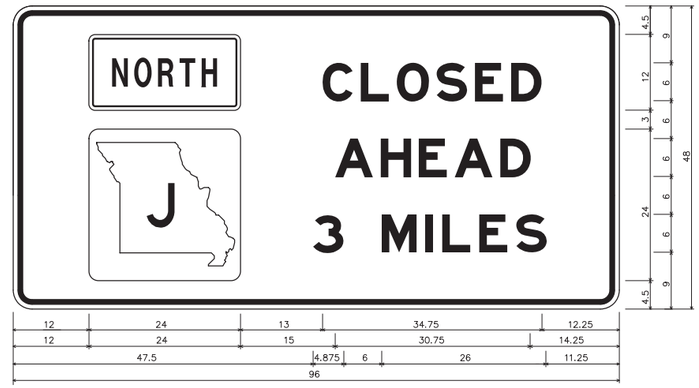

M04-13-96 SHR4L1; 3.000" Radius, 1.250" Border, 0.750" Indent, Black on Orange
[CLOSED] E Mod; [AHEAD] E Mod; [3 MILES] E Mod;
Table of letter and object lefts.

NORTH 12.000	C 49.000	L 55.000	O 60.750	S 67.000	E 73.250	D 79.000
12.000	A 51.000	H 58.250	E 64.500	A 69.750	D 77.000	
3 47.500	M 59.000	I 60.000	L 68.750	E 74.250	S 79.750	

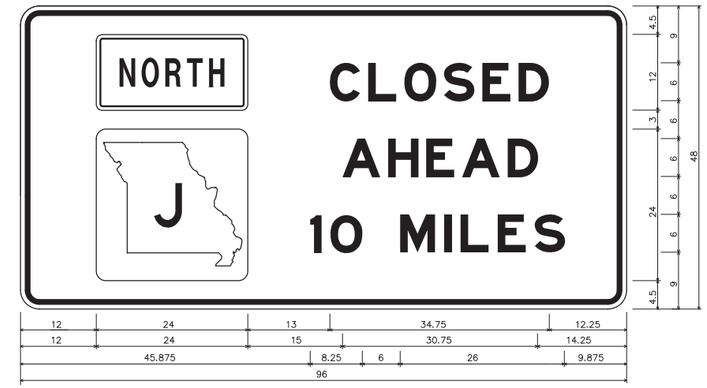

M04-13-96 SHR4L1; 3.000" Radius, 1.250" Border, 0.750" Indent, Black on Orange
[CLOSED] E Mod; [AHEAD] E Mod; [10 MILES] E Mod;
Table of letter and object lefts.

NORTH 12.000	C 49.000	L 55.000	O 60.750	S 67.000	E 73.250	D 79.000
12.000	A 51.000	H 58.250	E 64.500	A 69.750	D 77.000	
1 45.875	0 49.000	M 60.125	I 67.250	L 70.000	E 75.500	S 81.250

NOTES:

SPECIAL SIGNS SHALL BE IN ACCORDANCE WITH SECTION 616 OF THE STANDARD SPECIFICATIONS AND INSTALLED PER STANDARD 616.10.

INSTALLATION AND REMOVAL OF CLOSURE PLAQUES IS INCIDENTAL TO THE BASE SPECIAL SIGN. NO DIRECT PAY FOR CLOSURE PLAQUES.

CLOSURE PLAQUES

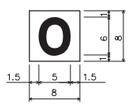

Number Plaque SHR4L1;
No Border, Black on Orange;
[0] E Mod;
Table of letter and object lefts.

0 1.500

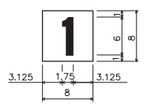

Number Plaque SHR4L1;
No Border, Black on Orange;
[1] E Mod;
Table of letter and object lefts.

1 3.125

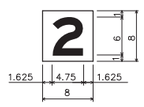

Number Plaque SHR4L1;
No Border, Black on Orange;
[2] E Mod;
Table of letter and object lefts.

2 1.625

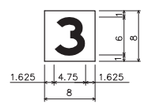

Number Plaque SHR4L1;
No Border, Black on Orange;
[3] E Mod;
Table of letter and object lefts.

3 1.625

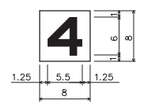

Number Plaque SHR4L1;
No Border, Black on Orange;
[4] E Mod;
Table of letter and object lefts.

4 1.250

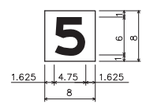

Number Plaque SHR4L1;
No Border, Black on Orange;
[5] E Mod;
Table of letter and object lefts.

5 1.625

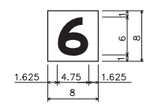

Number Plaque SHR4L1;
No Border, Black on Orange;
[6] E Mod;
Table of letter and object lefts.

6 1.625

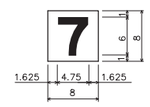

Number Plaque SHR4L1;
No Border, Black on Orange;
[7] E Mod;
Table of letter and object lefts.

7 1.625

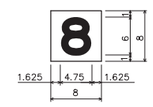

Number Plaque SHR4L1;
No Border, Black on Orange;
[8] E Mod;
Table of letter and object lefts.

8 1.625

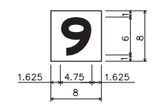

Number Plaque SHR4L1;
No Border, Black on Orange;
[9] E Mod;
Table of letter and object lefts.

9 1.625

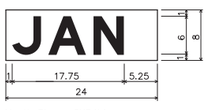

Month Plaque SHR4L1;
No Border, Black on Orange;
[JAN] E Mod;
Table of letter and object lefts.

J 1.000	A 6.750	N 13.000

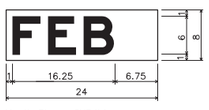

Month Plaque SHR4L1;
No Border, Black on Orange;
[FEB] E Mod;
Table of letter and object lefts.

F 1.000	E 6.250	B 11.375

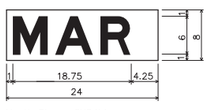

Month Plaque SHR4L1;
No Border, Black on Orange;
[MAR] E Mod;
Table of letter and object lefts.

M 1.000	A 7.750	R 15.000

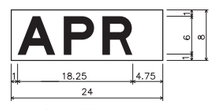

Month Plaque SHR4L1;
No Border, Black on Orange;
[APR] E Mod;
Table of letter and object lefts.

A 1.000	P 8.250	R 14.500

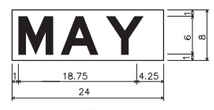

Month Plaque SHR4L1;
No Border, Black on Orange;
[MAY] E Mod;
Table of letter and object lefts.

M 1.000	A 7.750	Y 13.750

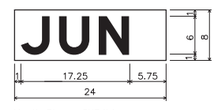

Month Plaque SHR4L1;
No Border, Black on Orange;
[JUN] E Mod;
Table of letter and object lefts.

J 1.000	U 7.125	N 13.375

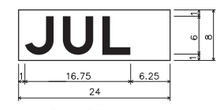

Month Plaque SHR4L1;
No Border, Black on Orange;
[JUL] E Mod;
Table of letter and object lefts.

J 1.000	U 7.000	L 13.375

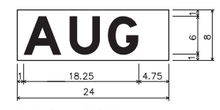

Month Plaque SHR4L1;
No Border, Black on Orange;
[AUG] E Mod;
Table of letter and object lefts.

A 1.000	U 8.250	G 14.500

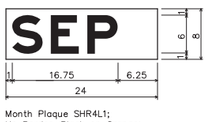

Month Plaque SHR4L1;
No Border, Black on Orange;
[SEP] E Mod;
Table of letter and object lefts.

S 1.000	E 7.250	P 13.000

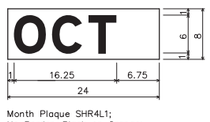

Month Plaque SHR4L1;
No Border, Black on Orange;
[OCT] E Mod;
Table of letter and object lefts.

O 1.000	C 7.250	T 12.875

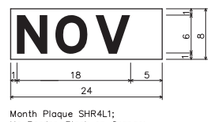

Month Plaque SHR4L1;
No Border, Black on Orange;
[NOV] E Mod;
Table of letter and object lefts.

N 1.000	O 6.750	V 12.500

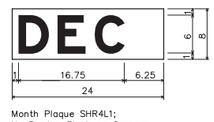

Month Plaque SHR4L1;
No Border, Black on Orange;
[DEC] E Mod;
Table of letter and object lefts.

D 1.000	E 6.500	C 11.500

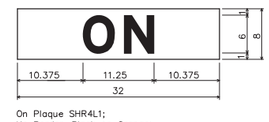

On Plaque SHR4L1;
No Border, Black on Orange;
[ON] E Mod;
Table of letter and object lefts.

O 10.375	N 16.875

TRAFFIC CONTROL SHEET
SPECIAL SIGN AND PLAQUE DETAILS
SHEET 3 OF 3

STATE OF MISSOURI
KEITH LAWRENCE WETTER
NUMBER E-25019
REGISTERED PROFESSIONAL ENGINEER

THIS SHEET HAS BEEN SIGNED, SEALED AND DATED ELECTRONICALLY

DATE PREPARED 7/2/2020

ROUTE	STATE
J	MO
DISTRICT	SHEET NO.
CD	12

COUNTY: GASCONADE
JOB NO. J5S3176
CONTRACT ID.
PROJECT NO.
BRIDGE NO.

DESCRIPTION	DATE

MISSOURI HIGHWAYS AND TRANSPORTATION COMMISSION
105 WEST CAPITOL
JEFFERSON CITY, MO 65102
1-888-ASK-MODOT (1-888-275-6636)

LOCHNER
16105 W. 113th Street | Suite 107 | Lenexa, KS 66219
Certificate of Authority #F00727076

REV.

012_TC_03_J5P3176_I1.dgn 12:22:08 PM 7/2/2020

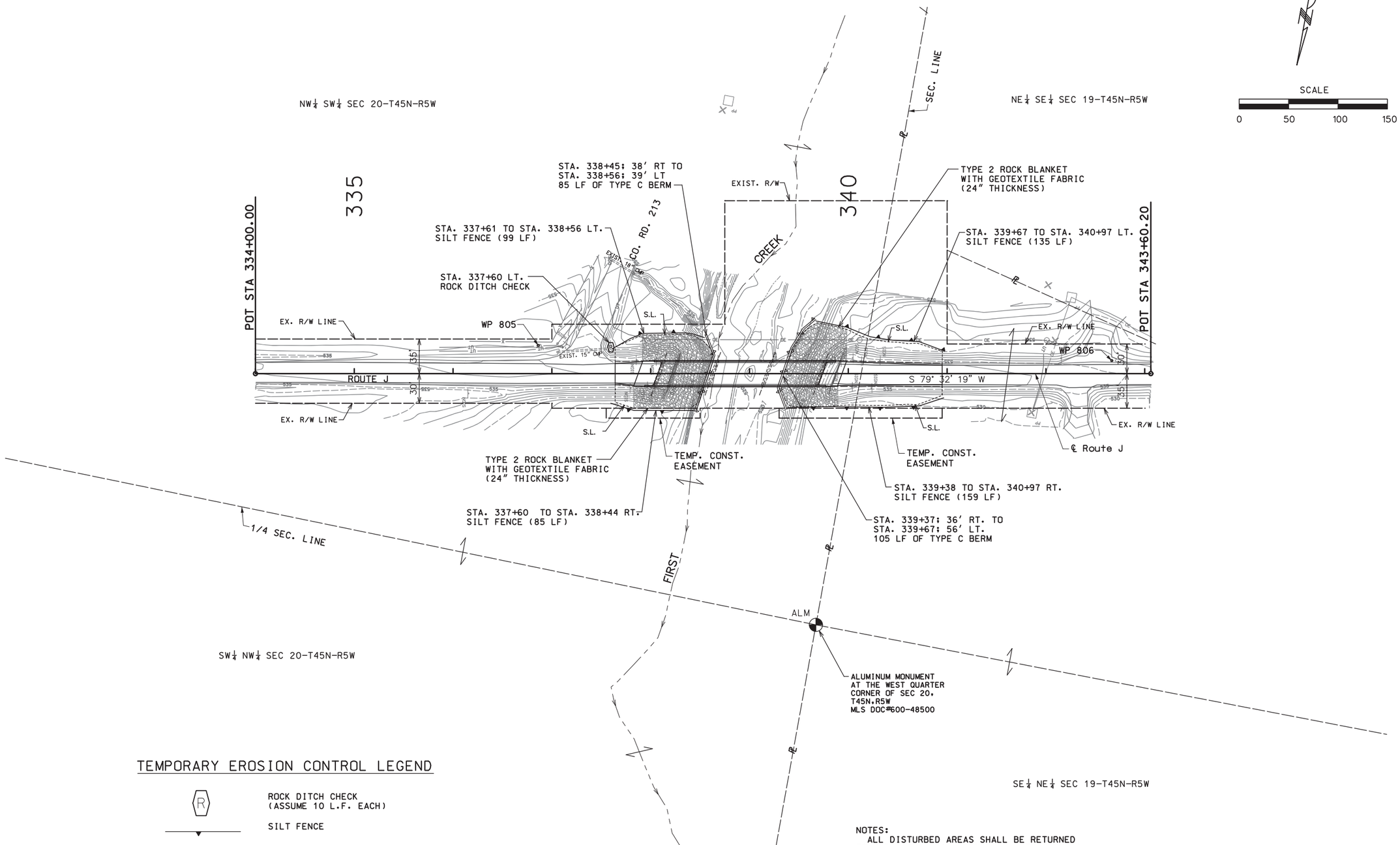

TEMPORARY EROSION CONTROL LEGEND

- ROCK DITCH CHECK (ASSUME 10 L.F. EACH)
- SILT FENCE
- TYPE C BERM

NOTES:
ALL DISTURBED AREAS SHALL BE RETURNED TO THEIR ORIGINAL CONDITION WITH SEEDING AND MULCHING. SEE STD. PLAN 806.10 FOR TEMPORARY EROSION CONTROL MEASURES.

EROSION CONTROL SHEET
SHEET 1 OF 1

STATE OF MISSOURI
KEITH LAWRENCE WETTER
NUMBER E-25019
REGISTERED PROFESSIONAL ENGINEER

THIS SHEET HAS BEEN SIGNED, SEALED AND DATED ELECTRONICALLY

DATE PREPARED	7/2/2020
ROUTE	J
STATE	MO
DISTRICT	CD
SHEET NO.	13
COUNTY	GASCONADE
JOB NO.	J5S3176
CONTRACT ID.	
PROJECT NO.	
BRIDGE NO.	

DESCRIPTION

DATE

MISSOURI HIGHWAYS AND TRANSPORTATION COMMISSION
105 WEST CAPITOL
JEFFERSON CITY, MO 65102
1-888-ASK-MODOT (1-888-275-6636)

LOCHNER
16105 W. 113th Street | Suite 107 | Lenexa, KS 66219
Certificate of Authority #F00727076

REV.

013_EC_01_J5S3176_I50.dgn 12:22:46 PM 7/2/2020

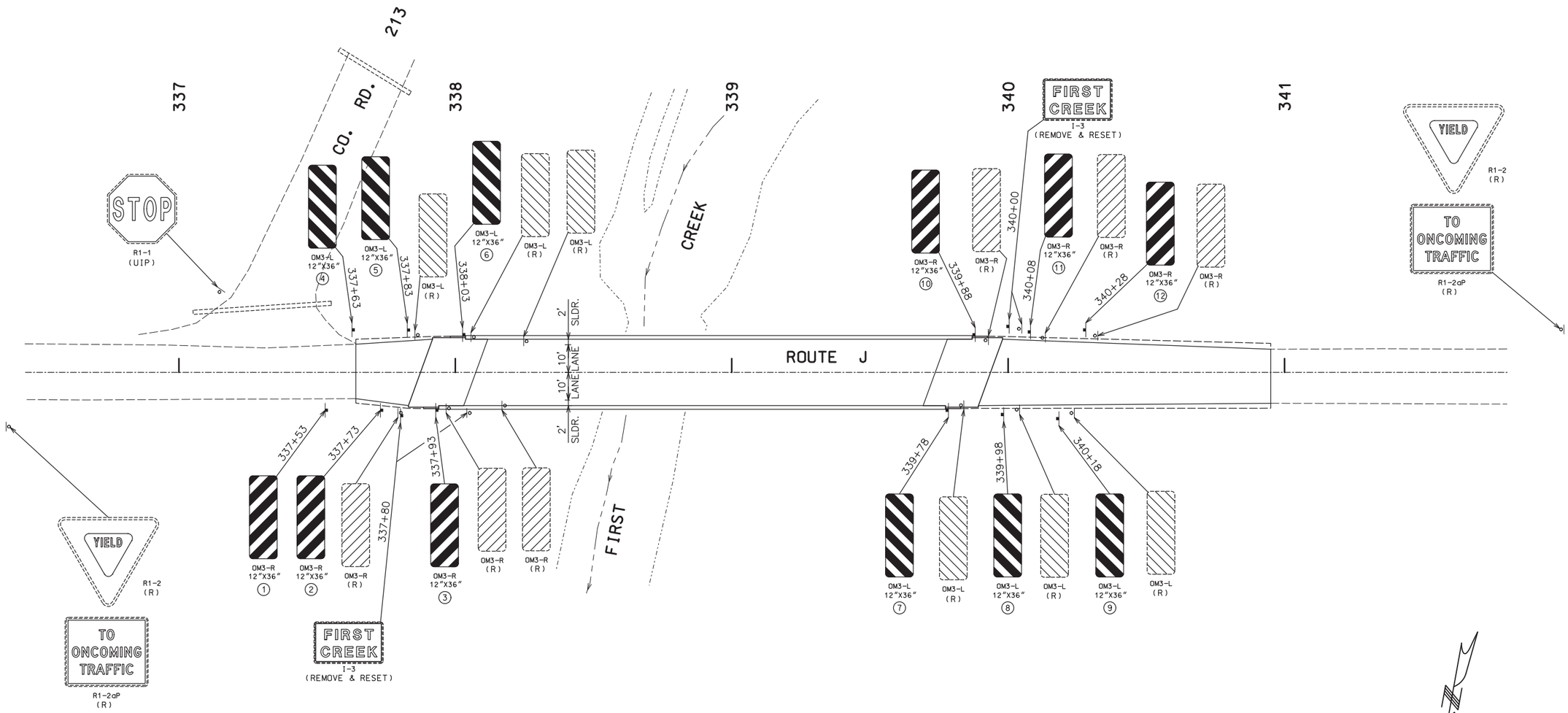

LEGEND

- EXISTING SIGN
- PROPOSED SIGN

SIGNING SHEET
SHEET 1 OF 3

STATE OF MISSOURI
KEITH LAWRENCE WETTER
NUMBER E-25019
REGISTERED PROFESSIONAL ENGINEER

THIS SHEET HAS BEEN SIGNED, SEALED AND DATED ELECTRONICALLY

DATE PREPARED	
7/2/2020	
ROUTE	STATE
J	MO
DISTRICT	SHEET NO.
CD	14
COUNTY	
GASCONADE	
JOB NO.	
J5S3176	
CONTRACT ID.	
PROJECT NO.	
BRIDGE NO.	

DESCRIPTION

DATE

MISSOURI HIGHWAYS AND TRANSPORTATION COMMISSION
105 WEST CAPITOL
JEFFERSON CITY, MO 65102
1-888-ASK-MODOT (1-888-275-6636)

LOCHNER
16105 W. 113th Street | Suite 107 | Lenexa, KS 66219
Certificate of Authority #F00727076

REV.

014_SN_01_J5P3176_I20.dgn 12:23:54 PM 7/2/2020

EFFECTIVE 12-01-2017

SIGNS						PIPE POST ✳					STRUCTURAL STEEL											U CHANNEL POST	PERFORATED SQUARE STEEL TUBE POST															FOOTINGS		REMARKS AND OTHER REQUIRED ITEMS.
902 SIGNAL SIGNS TABULATED ON D-37A SHEET											POSTS ✳						BACKING BARS 2″ X 3/8″ BARS @ 2.55 LBS PER LIN FT				TOTAL		2 IN							2.5 IN						BREAK-AWAY ASSEMBLY	EMBD	BOLT DOWN	
SIGN NO.	SIGN SIZE	STATION	HORZ CLEAR IF NOT STD	LOCATION	SIGN DTL. SHT. NO.	PIPE SIZE	POST NO.1	POST NO.2	LBS PER FT	TOTAL ITEM NO. 9031220	POST DES NO.	POST NO.1	POST NO.2	POST NO.3	LBS PER FT	TOTAL	NO. EACH	LGTH IN.	TOTAL LF	TOTAL LBS	ITEM NO. 9031210 LBS	ITEM NO. 9031250 LF	POST NO.1	POST NO.2	TOTAL ITEM NO. 9031270A	ANCHOR 7 GA. ITEM NO. 9031273	OMNI 7 GA. ITEM NO. 9031279	ANCHOR 12 GA. ITEM NO. 9031271	OMNI 12 GA. ITEM NO. 9031278	POST NO.1	POST NO.2	TOTAL ITEM NO. 9031280	2.25″ INSERT ITEM NO. 9031272	ANCHOR 7 GA. ITEM NO. 9031281	OMNI 7 GA. ITEM NO. 9031282	ITEM NO. 9031241 EACH	ITEM NO. 9031010 CU YDS	ITEM NO. 9031020 CU YDS	
						IN.	LF	LF		LBS		LF	LF	LF		LBS	EACH	IN.	LF	LBS	LBS	LF	LF	LF	LF	LF	LF	LF	LF	LF	LF	LF	LF	LF	LF	LF	EACH	CU YDS	CU YDS	
1	12″x36″	337+53		14.5′RT.																		11.5																		TYPE 3 OBJECT MARKER
2	12″x36″	337+73		14.0′RT.																		11.0																		TYPE 3 OBJECT MARKER
3	12″x36″	337+93		13.5′RT.																		10.5																		TYPE 3 OBJECT MARKER
4	12″x36″	337+63		15.5′LT.																		11.5																		TYPE 3 OBJECT MARKER
5	12″x36″	337+83		14.5′LT.																		11.0																		TYPE 3 OBJECT MARKER
6	12″x36″	338+03		13.5′LT.																		10.5																		TYPE 3 OBJECT MARKER
7	12″x36″	339+78		13.5′RT.																		10.5																		TYPE 3 OBJECT MARKER
8	12″x36″	339+98		15.0′RT.																		11.0																		TYPE 3 OBJECT MARKER
9	12″x36″	340+18		16.5′RT.																		11.5																		TYPE 3 OBJECT MARKER
10	12″x36″	339+88		13.5′LT.																		10.5																		TYPE 3 OBJECT MARKER
11	12″x36″	340+08		14.5′LT.																		11.0																		TYPE 3 OBJECT MARKER
12	12″x36″	340+28		15.5′LT.																		11.5																		TYPE 3 OBJECT MARKER
SUBTOTAL																						132																		
TOTAL																						132																		

✳ BREAKAWAY ASSEMBLY IS INCIDENTAL FOR PIPE AND STRUCTURAL STEEL POSTS

ROUND PIPE POST AND FOOTING DATA TABLE

NOM. SIZE (IN.)	WEIGHT LBS/FT	WEIGHT LBS/IN	STUB LENGTH	FOOTING DIA.	FOOTING DEPTH	CONCRETE C.Y.
2 1/2	5.79	0.48	4′- 3 1/2″	12″	4′-6″	0.13
3	7.58	0.63	4′- 3 1/2″	12″	4′-6″	0.13
4	10.79	0.90	5′- 3 1/2″	18″	5′-6″	0.36

POST AND FOOTING DATA TABLE

POST DES. NO.	POST NOM. SIZE	POST WEIGHT LBS/FT	POST WEIGHT LBS/IN	POST STUB LENGTH	FOOTING DIA.	LEVEL GROUND DEPTH	LEVEL GROUND C.Y.	6:1 GRADE DEPTH	6:1 GRADE C.Y.	4:1 GRADE DEPTH	4:1 GRADE C.Y.	3:1 OR 2:1 GRADE DEPTH	3:1 OR 2:1 GRADE C.Y.
1	W6	9.0	0.75	3′-0″	15″	3′-0″	0.14	3′-2″	0.15	3′-3″	0.16	3′-6″	0.17
2	W6	15.0	1.25	4′-0″	24″	4′-0″	0.47	4′-2″	0.50	4′-3″	0.51	4′-6″	0.54
3	W8	18.0	1.50	4′-6″	28″	4′-6″	0.71	4′-8″	0.73	4′-9″	0.74	5′-0″	0.78
4	W10	22.0	1.83	5′-0″	36″	5′-0″	1.31	5′-2″	1.36	5′-3″	1.39	5′-6″	1.45
5	W10	26.0	2.17	5′-0″	36″	5′-0″	1.31	5′-3″	1.37	5′-5″	1.43	5′-9″	1.52
6	W12	35.0	2.92	5′-6″	36″	5′-6″	1.44	5′-9″	1.52	5′-11″	1.56	6′-3″	1.65

SIGNING SHEET
SHEET 2 OF 3

D-29

STATE OF MISSOURI
KEITH LAWRENCE WETTER
NUMBER E-25019
REGISTERED PROFESSIONAL ENGINEER

THIS SHEET HAS BEEN SIGNED, SEALED AND DATED ELECTRONICALLY

DATE PREPARED 7/2/2020

ROUTE	STATE
J	MO

DISTRICT	SHEET NO.
CD	15

COUNTY: GASCONADE

JOB NO. J5S3176

CONTRACT ID.

PROJECT NO.

BRIDGE NO.

DESCRIPTION

DATE

MISSOURI HIGHWAYS AND TRANSPORTATION COMMISSION
105 WEST CAPITOL
JEFFERSON CITY, MO 65102
1-888-ASK-MODOT (1-888-275-6636)

LOCHNER
16105 W. 113th Street | Suite 107 | Lenexa, KS 66219
Certificate of Authority #F00727076

REV.

015_SN_02_J5P3176_l1.dgn 12:24:44 PM 7/2/2020

EFFECTIVE 10-01-2016

STANDARD SIGN ASSEMBLIES

SIGN NUMBER	STATION	LOCATION	TYPE: SH (SIGN DESCRIPTION, SIZES & NUMBER OF EACH: 36"x36")	TYPE: SH (SIGN DESCRIPTION, SIZES & NUMBER OF EACH: 48"x48")
1	337+53	RTE J-14.5' RT.	1	
2	337+73	RTE J-14.0' RT.	1	
3	337+93	RTE J-13.5' RT.	1	
4	337+63	RTE J-15.5' LT.		1
5	337+83	RTE J-14.5' LT.		1
6	338+03	RTE J-13.5' LT.		1
7	339+78	RTE J-13.5' RT.		1
8	339+98	RTE J-15.0' RT.		1
9	340+18	RTE J-16.5' RT.		1
10	339+88	RTE J-13.5' LT.	1	
11	340+08	RTE J-14.5' LT.	1	
12	340+28	RTE J-15.5' LT.	1	
		TOTAL	6	6

SIGN SUMMARY

STANDARD SIGN OR SPECIAL SIGN NUMBER	SIGN DETAIL SHEET NO.	NO. EACH	SIZE	FLAT SHEET SH (ITEM NO. 9035004A)	FLAT SHEET FLUORESCENT SHF ✳ (ITEM NO. 9035069A)	STRUCTURAL ST (ITEM NO. 9035011A)	STRUCTURAL FLUORESCENT STF ✳ (ITEM NO. 9035071A)
OM3-R TYPE 3 OBJECT MARKER	14	6	12"X36"		18.0		
OM3-L TYPE 3 OBJECT MARKER	14	6	12"X36"		18.0		
			TOTAL		36.0		

✳ ORANGE, YELLOW & YELLOW/GREEN

SIGNING SHEET
SHEET 3 OF 3

D-30

STATE OF MISSOURI
KEITH LAWRENCE WETTER
NUMBER E-25019
REGISTERED PROFESSIONAL ENGINEER

THIS SHEET HAS BEEN SIGNED, SEALED AND DATED ELECTRONICALLY

DATE PREPARED 7/2/2020

ROUTE	STATE
J	MO
DISTRICT	SHEET NO.
CD	16

COUNTY: GASCONADE

JOB NO. J5S3176

CONTRACT ID.

PROJECT NO.

BRIDGE NO.

DESCRIPTION	DATE

MISSOURI HIGHWAYS AND TRANSPORTATION COMMISSION
105 WEST CAPITOL
JEFFERSON CITY, MO 65102
1-888-ASK-MODOT (1-888-275-6636)

LOCHNER
16105 W. 113th Street | Suite 107 | Lenexa, KS 66219
Certificate of Authority #F00727076

REV.

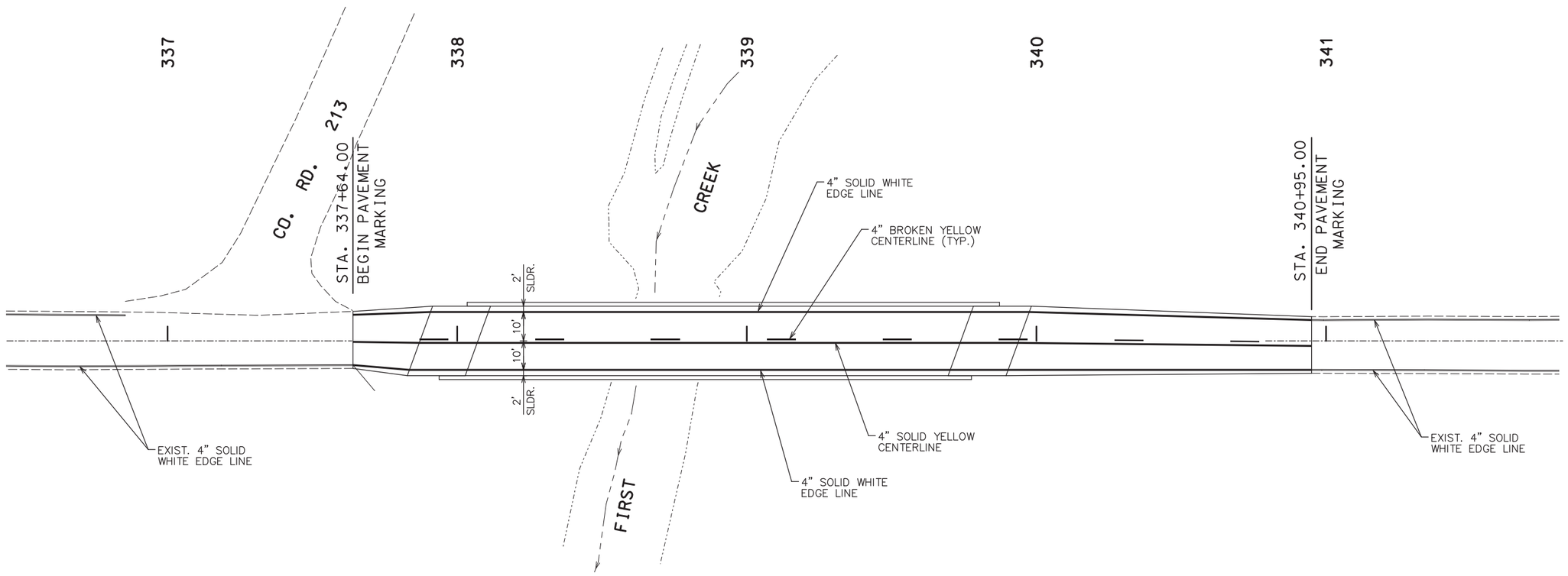

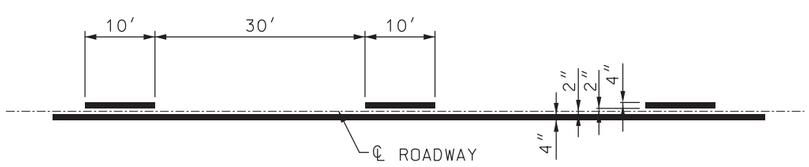

DOUBLE CENTERLINE
LINE DETAIL

NOTE:
PAVEMENT MARKING SHALL BE WATERBORNE PAVEMENT MARKING PAINT WITH TYPE P BEADS.

SCALE
0 20 40 60

PAVEMENT MARKING
SHEET 1 OF 1

STATE OF MISSOURI
KEITH LAWRENCE WETTER
NUMBER E-25019
REGISTERED PROFESSIONAL ENGINEER

THIS SHEET HAS BEEN SIGNED, SEALED AND DATED ELECTRONICALLY

DATE PREPARED	
7/2/2020	
ROUTE	STATE
J	MO
DISTRICT	SHEET NO.
CD	17
COUNTY	
GASCONADE	
JOB NO.	
J5S3176	
CONTRACT ID.	
PROJECT NO.	
BRIDGE NO.	

DATE	DESCRIPTION

MISSOURI HIGHWAYS AND TRANSPORTATION COMMISSION
105 WEST CAPITOL
JEFFERSON CITY, MO 65102
1-888-ASK-MODOT (1-888-275-6636)

LOCHNER
16105 W. 113th Street | Suite 107 | Lenexa, KS 66219
Certificate of Authority #F00727076

REV.

017_PM_01_J5P3176_I20.dgn 12:25:46 PM 7/2/2020

SEC/SUR 20 TWP 45N RGE 5W

MISSOURI HIGHWAYS AND TRANSPORTATION COMMISSION

(55′ – 55′ – 55′) 32″ PRESTRESSED CONCRETE TYPE 2 I-GIRDER SPANS
(20 DEGREE SKEW L.A.)

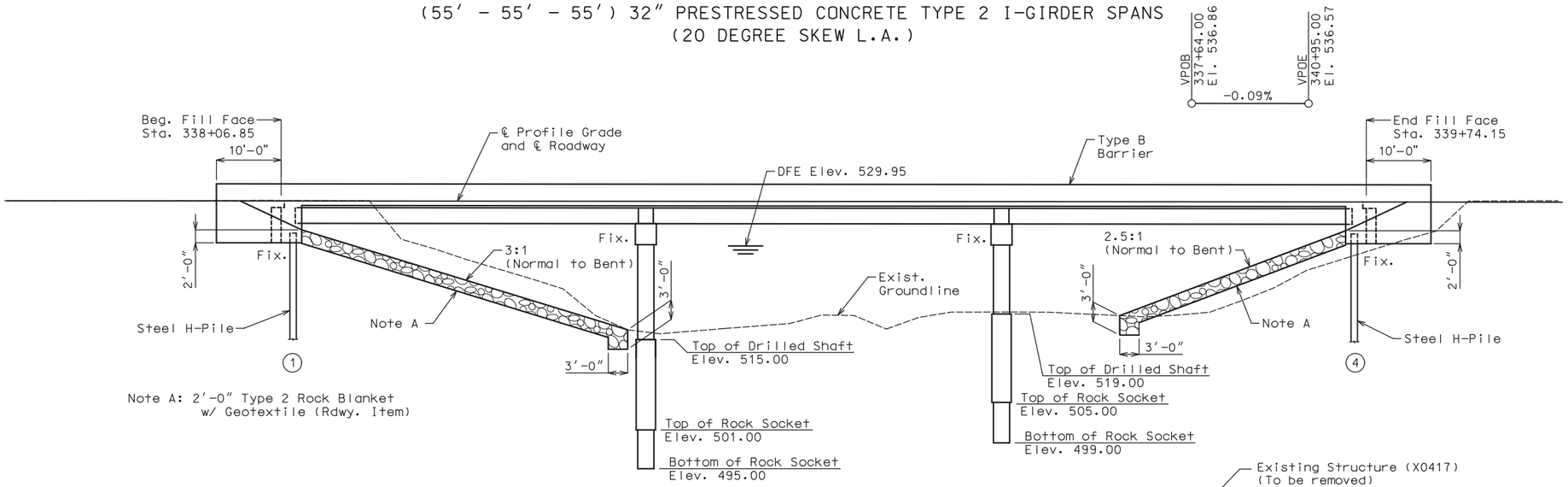

Note A: 2′–0″ Type 2 Rock Blanket w/ Geotextile (Rdwy. Item)

GENERAL ELEVATION

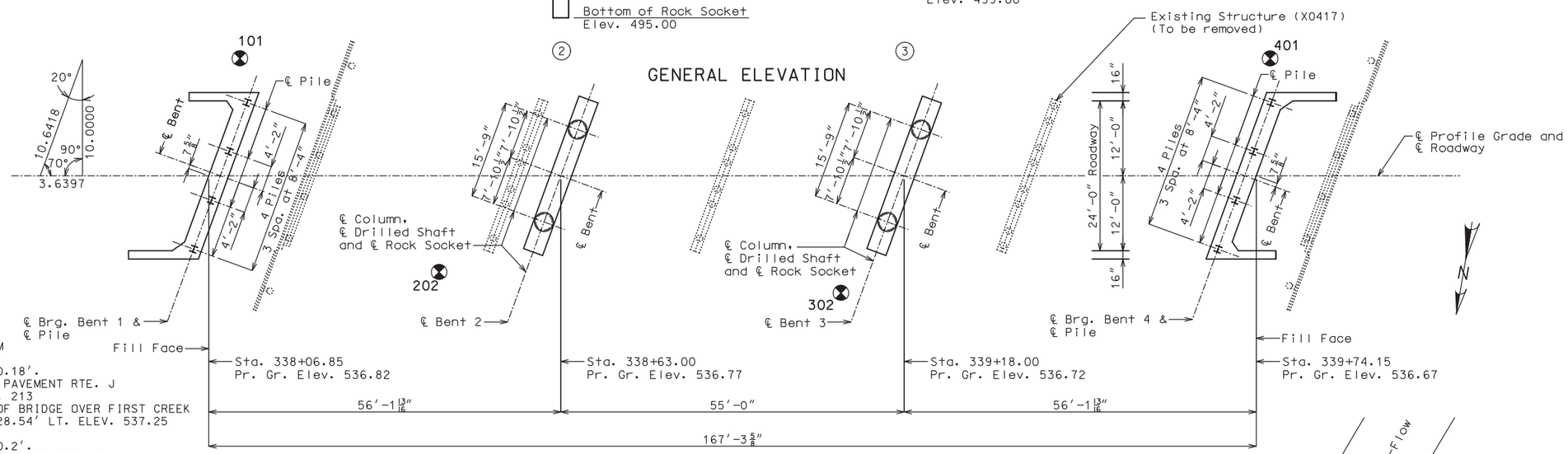

PLAN

BENCH MARKS – NAVD 88 DATUM

WP #805 80D SPIKE BURIED 0.18′.
SOUTH OF SOUTH EDGE OF PAVEMENT RTE. J
49′ EAST OF CL. CO. RD. 213
140′ EAST OF EAST END OF BRIDGE OVER FIRST CREEK
STA. 336+86.27 OFFSET 28.54′ LT. ELEV. 537.25

WP #806 80D SPIKE BURIED 0.2′.
4′ SOUTH OF SOUTH EDGE OF PAVEMENT RTE. J
275′ WEST OF EAST END OF BRIDGE OVER FIRST CREEK
16′ WEST OF FIELD ENTRANCE
STA. 342+66.64 OFFSET 13.21′ LT. ELEV. 534.05

"◔" Indicates location of Borings

Notice and Disclaimer Regarding Boring Log Data

The locations of all subsurface borings for this structure are shown on the plan sheet(s) for this structure. The boring data for all locations indicated, as well as any other boring logs or other factual records of subsurface data and investigations performed by the department for the design of the project, are shown on Sheets No. 24 and 25 and may be included in the Electronic Bridge Deliverables. They will also be available from the Project Contact upon written request. No greater significance or weight should be given to the boring data depicted on the plan sheets than is given to the subsurface data available from the district or elsewhere.

The Commission does not represent or warrant that any such boring data accurately depicts the conditions to be encountered in constructing this project. A contractor assumes all risks it may encounter in basing its bid prices, time or schedule of performance on the boring data depicted here or those available from the district, or on any other documentation not expressly warranted, which the contractor may obtain from the Commission.

Notes:

For General Notes, Estimated Quantities, Foundation Data, Hydrologic Data, see Sheet No. 2.

Existing roadway fill under the ends of the bridge shall be removed as shown. Removal of existing roadway fill will be considered completely covered by the contract unit price for roadway excavation.

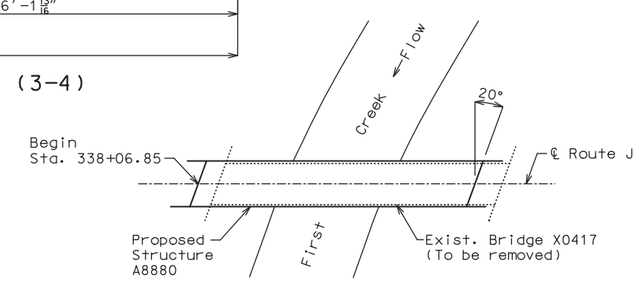

LOCATION SKETCH

BRIDGE: ROUTE J OVER FIRST CREEK

STATE ROUTE J

ABOUT 5.3 MILES S.W. OF HERMANN

BEGINNING STATION 338+06.85

DESIGNED BY:	KLW	5/2020
DETAILED BY:	RCL	5/2020
CHECKED BY:	DMA	5/2020

Note: This drawing is not to scale. Follow dimensions.

STD. 609.00
STD. 617.10
STD. 706.35

Sheet No. 1 of 25

STATE OF MISSOURI
KEITH LAWRENCE WETTER
NUMBER E-25019
REGISTERED PROFESSIONAL ENGINEER

THIS SHEET HAS BEEN SIGNED, SEALED AND DATED ELECTRONICALLY

DATE PREPARED 7/2/2020

ROUTE	STATE
J	MO
DISTRICT	SHEET NO.
BR	1

COUNTY GASCONADE

JOB NO. J5S3176

CONTRACT ID.

PROJECT NO.

BRIDGE NO. A8880

DESCRIPTION

DATE

MISSOURI HIGHWAYS AND TRANSPORTATION COMMISSION
105 WEST CAPITOL
JEFFERSON CITY, MO 65102
1-888-ASK-MODOT (1-888-275-6636)

LOCHNER
16105 W. 113th Street | Suite 107 | Lenexa, KS 66219
Certificate of Authority #F00727076

REV.

B_A8880_001_J5S3176_FRONTSHEET.dgn 10:48:01 AM 7/2/2020

GENERAL NOTES:

Design Specifications:
2012 AASHTO LRFD Bridge Design Specifications (6th Ed.) and 2013 Interim Revisions
2011 AASHTO Guide Specifications for LRFD Seismic Bridge Design (2nd Ed.) and 2014 Interim Revisions (Seismic Details)
Seismic Design Category = A
Design earthquake response spectral acceleration coefficient at 1.0 second period, SD1 = 0.115g
Acceleration Coefficient (effective peak ground acceleration coefficient), As = 0.094g

Design Loading:
Vehicular = HL-93.
Future Wearing Surface = 35 lb/sf
Earth 120 lb/cf.,
Equivalent Fluid Pressure = 45 lb/cf

Superstructure: Simply-supported, Non-Composite for dead load. Continuous Composite for live load.

Design Unit Stresses:

Class B Concrete (Substructure)	f'c = 3,000 psi
Class B-2 Concrete (Drilled Shafts & Rock Sockets)	f'c = 4,000 psi
Class B-2 Concrete (Superstructure, except Prestressed Girders and Barrier)	f'c = 4,000 psi
Class B-1 Concrete (Barrier)	f'c = 4,000 psi
Reinforcing Steel (Grade 60)	fy = 60,000 psi
Structural Steel HP Pile (ASTM A709 Grade 50S)	fy = 50,000 psi

For precast prestressed panel stresses, see Sheet No. 13.

For Prestressed girder stresses, See Sheet No. 10.

Neoprene Pads:
Plain Neoprene Bearing Pads shall be 60 durometer and shall be in accordance with Sec 716.

Joint Filler:
All joint filler shall be in accordance with Sec 1057 for preformed sponge rubber expansion and partition joint filler, except as noted.

Reinforcing Steel:
Minimum clearance to reinforcing steel shall be 1½", unless otherwise shown.

Traffic Handling:
Structure to be closed during construction. Traffic to be maintained on other routes during construction. See roadway plans for traffic control.

Miscellaneous:
MoDOT Construction personnel will indicate the type of joint filler option used under the precast panels for this structure:
☐ Constant Joint Filler
☐ Variable Joint Filler

Estimated Quantities

Item		Substr.	Superstr.	Total
Class 1 Excavation	cu. yard	30		30
Removal of Bridges (X0417)	lump sum			1
Bridge Approach Slab (Minor Road)	sq. yard			110
Drilled Shafts (3 Ft. 0 in. Dia.)	lin. foot	56.0		56.0
Rock Sockets (2 Ft. 6 in. Dia.)	lin. foot	24.0		24.0
Video Camera Inspection	each	4		4
Foundation Inspection Holes	lin. foot	64		64
Sonic Logging Testing	each	4		4
Galvanized Structural Steel Piles (12 in.)	lin. foot	208		208
Pre-Bore For Piling	lin. foot	28		28
Pile Point Reinforcement	each	8		8
Class B Concrete (Substructure)	cu. yard	56.3		56.3
Slab on Concrete I-Girder	sq. yard		493	493
* Type B Barrier	lin. foot		375	375
Type 2 (32 in.), Prestressed Concrete I-Girder	lin. foot		653	653
Reinforcing Steel (Bridges)	pound	9160		9160
Steel Intermediate Diaphragm For P/S Concrete Girders	each		9	9
Slab Drain	each		30	30
Vertical Drain at End Bents	each			2
Plain Neoprene Bearing Pad	each		24	24

* Type B Barrier shall be cast-in-place option or slip-form option.

All concrete above the construction joint in the end bents is included in the Estimated Quantities for Slab on Concrete I-Girder.

All reinforcement in the end bents is included in the Estimated Quantities for Slab on Concrete I-Girder.

All concrete above the intermediate beam cap is included in the Estimated Quantities for Slab on Concrete I-Girder.

All reinforcement in the intermediate bent concrete diaphragms except reinforcement embedded in the beam cap is included in the Estimated Quantities for Slab on Concrete I-Girder.

Estimated Quantities for Slab on Concrete I-Girder

Item		Quantity
Class B-2 Concrete	cu. yard	156.0
Reinforcing Steel (Epoxy Coated)	pound	34,480

The table of Estimated Quantities for Slab on Concrete I-Girder represents the quantities used by the State in preparing the cost estimate for concrete slabs. The area of the concrete slab will be measured to the nearest square yard longitudinally from end of slab to end of slab and transversely from out to out of bridge slab (or with the horizontal dimensions as shown on the plan of slab). Payment for prestressed panels, conventional forms, all concrete and epoxy coated reinforcing steel will be considered completely covered by the contract unit price for the slab. Variations may be encountered in the estimated quantities but the variations cannot be used for an adjustment in the contract unit price.

Method of forming the slab shall be as shown on the plans and in accordance with Sec 703. All hardware for forming the slab to be left in place as a permanent part of the structure shall be coated in accordance with ASTM A123 or ASTM B633 with a thickness class SC 4 and a finish type I, II or III.

Precast Prestressed Panels:
The Estimated Quantities for Slab on Concrete I-Girder are based on skewed precast prestressed end panels.

Class B-2 Concrete quantity is based on minimum top flange thickness and minimum joint material thickness.

The prestressed panel quantities are not included in the table of Estimated Quantities for Slab on Concrete I-Girder.

Foundation Data

Type	Design Data		Bent Number 1	2	3	4
Load Bearing Pile	HP Pile Type and Size		HP 12x53	–	–	HP 12x53
	Number	ea.	4	–	–	4
	Approximate Length per Each	ft.	25	–	–	27
	Pile Point Reinforcement	ea.	All	–	–	All
	Min. Galvanized Penetration (Elev.)	ft.	Full Length	–	–	Full Length
	Pile Driving Verification Method		DF	–	–	DF
	Resistance Factor		0.4	–	–	0.4
	Minimum Nominal Axial Compressive Resistance	kip	410	–	–	410
Rock Socket	Number	ea.	–	2	2	–
	Foundation Material		–	Strong Rock	Strong Rock	–
	Elevation Range	ft.	–	498-474	502-475	–
	Resistance Factor (Side Resistance)		–	0.56	0.56	–
	Design Side Friction Minimum Nominal Axial Compressive Resistance (Side Resistance)	ksf	–	29.2	29.2	–
	Resistance Factor (Tip Resistance)		–	0.57	0.57	–
	Design End Bearing Minimum Nominal Axial Compressive Resistance (Tip Resistance)	ksf	–	400	400	–

Additional Notes:
Prebore for piles at Bent No. 4 thru anticipated boulder/cobble layer to Elevation 520.

DF = FHWA-modified Gates Dynamic Pile Formula

Load Bearing Pile:
Minimum Nominal Axial Compressive Resistance = Maximum Factored Loads/Resistance Factor.

HP piles are anticipated to be driven to refusal on rock. Review all borings for depth of rock and restrict driving as appropriate to comply with hard rock driving criteria in accordance with Sec 702.

Pile point reinforcement need not be galvanized. Shop drawings will not be required for pile point reinforcement.

Rock Socket (Drilled Shafts):
The use of permanent casing is anticipated.
Minimum Nominal Axial Compressive Resistance (Side Resistance + Tip Resistance) = Maximum Factored Loads/Resistance Factors
Thickness of permanent steel casing shall be in accordance with Sec 701.

An additional 4 feet has been added to V-bar lengths and additional 4-#4-P24 bars per shaft have been added in the quantities, if required, for possible change in drilled shaft or rock length. The additional V-bar length shall be cut off or included in the reinforcement lap if not required. The additional P bars shall be spaced similarly to that shown in elevation, if required, or to a lesser spacing if not required, but not less than 6-inch centers.

Sonic logging testing shall be performed on all drilled shafts and rock sockets.

Hydrologic Data

Drainage Area = 24.4 mi²
Design Flood Frequency = 50 years
Design Flood Discharge = 8,700 cfs
Design Flood (D.F.) Elevation = 529.95
Base Flood (100-year)
Base Flood Elevation = 530.58
Base Flood Discharge = 10,200 cfs
Estimated Backwater = +0.02 ft
Average Velocity thru Opening = 8.54 ft/s
Freeboard
Freeboard = 3.48 ft
Roadway Overtopping
Overtopping Flood Discharge > 13,800 cfs
Overtopping Flood Frequency = >500 years
500 Year Flood Elevation = N/A

GENERAL NOTES & ESTIMATED QUANTITIES

DESIGNED BY:	KLW	5/2020
DETAILED BY:	RCL	5/2020
CHECKED BY:	DMA	6/2020

Note: This drawing is not to scale. Follow dimensions.

STATE OF MISSOURI
KEITH LAWRENCE WETTER
NUMBER E-25019
REGISTERED PROFESSIONAL ENGINEER

THIS SHEET HAS BEEN SIGNED, SEALED AND DATED ELECTRONICALLY

DATE PREPARED 7/2/2020

ROUTE	STATE
J	MO
DISTRICT	SHEET NO.
BR	2

COUNTY GASCONADE
JOB NO. J5S3176
CONTRACT ID.
PROJECT NO.
BRIDGE NO. A8880

DESCRIPTION	DATE

MISSOURI HIGHWAYS AND TRANSPORTATION COMMISSION
105 WEST CAPITOL
JEFFERSON CITY, MO 65102
1-888-ASK-MODOT (1-888-275-6636)

LOCHNER
16105 W. 113th Street | Suite 107 | Lenexa, KS 66219
Certificate of Authority #F00727076

REV.

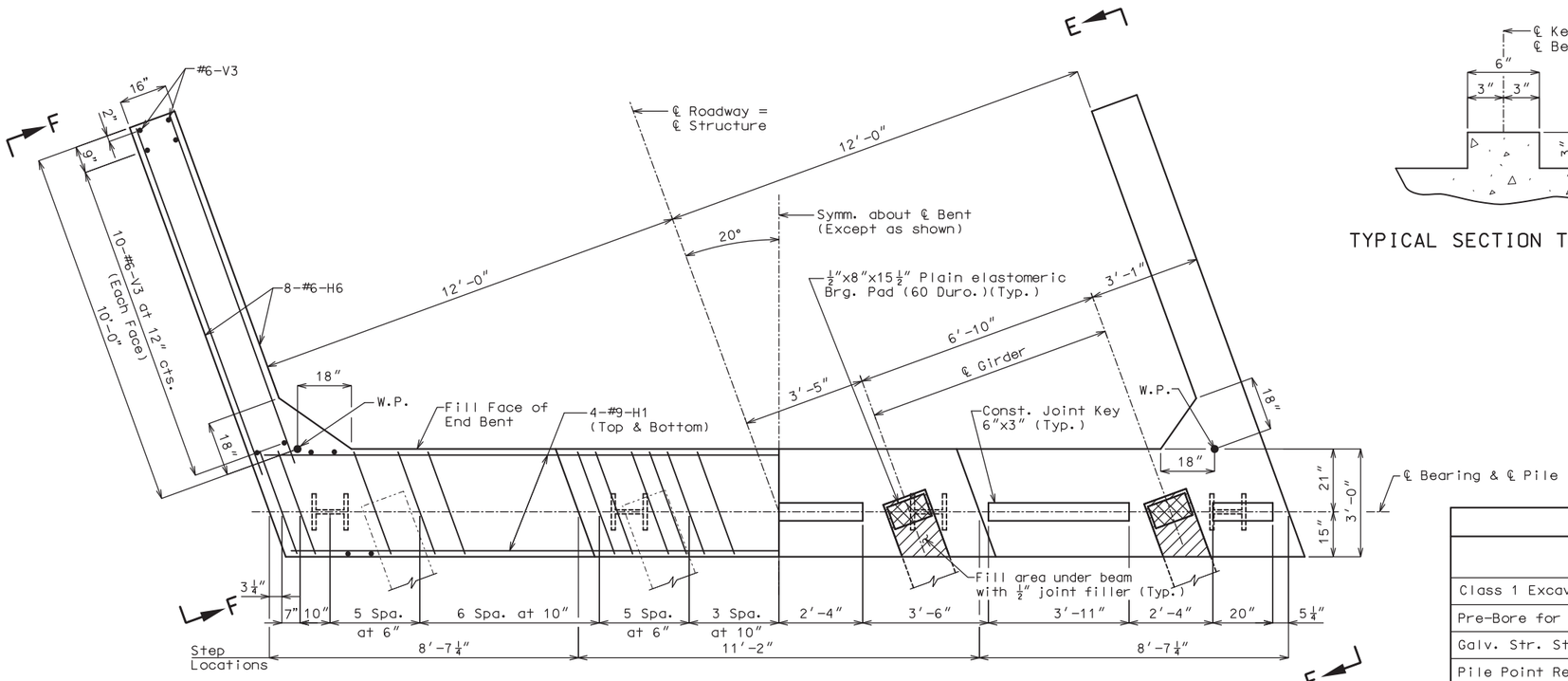

PLAN OF BEARING BEAM

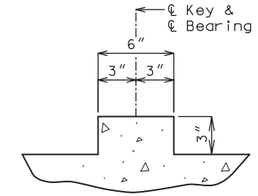

TYPICAL SECTION THRU KEY

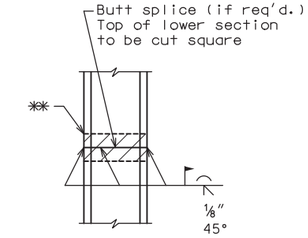

STEEL PILE SPLICE

⁂ Galvanizing material shall be omitted or removed one inch clear of weld locations in accordance with Sec 702.

Estimated Quantities			
Item		Quantity	
		Bent No. 1	Bent No. 4
Class 1 Excavation	cu. yard	30	–
Pre-Bore for Piling	lin. foot	–	28
Galv. Str. Steel Piles (12 in.)	lin. foot	124	116
Pile Point Reinforcement	each	4	4
Class B Concrete (Substructure)	cu. yard	13.1	13.1

Notes:

These quantities are included in the estimated quantities table on Sheet No. 2.

All concrete in the end bent above top of bearing beam and below top of slab shall be Class B-2.

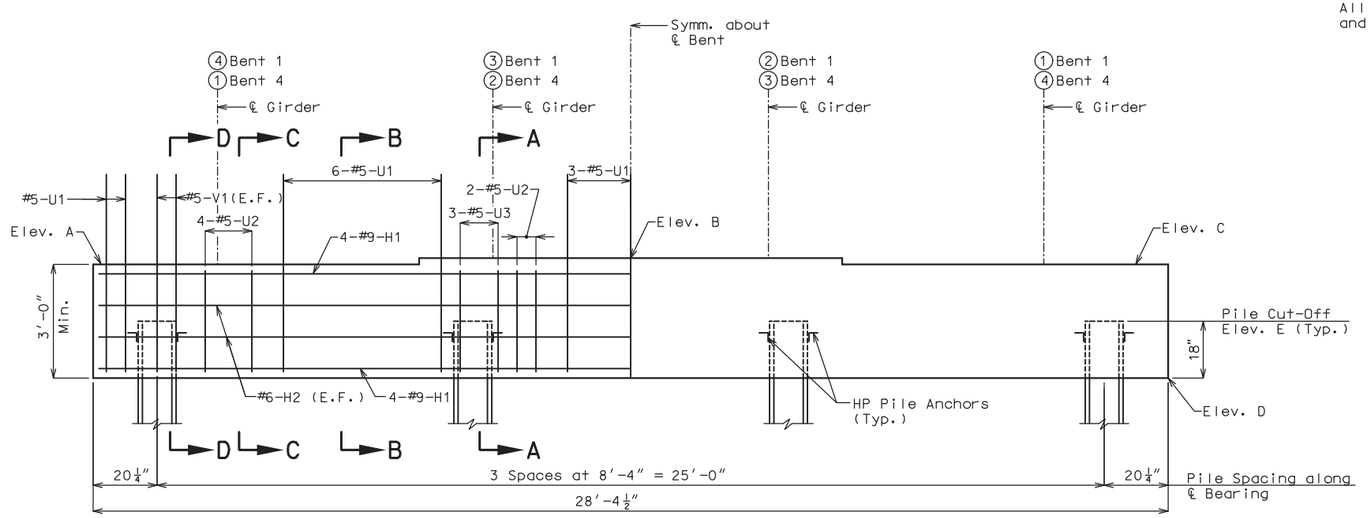

BEARING BEAM ELEVATION AT ℄ BEARING
(Keys not shown for clarity)

Elevation Table					
Bent	Elev. A	Elev. B	Elev. C	Elev. D	Elev. E
No. 1	532.97	533.11	532.97	529.97	531.47
No. 4	532.82	532.96	532.82	529.82	531.32

Notes:

For details of End Bent Nos. 1 and 4 not shown, see Sheets No. 4 and 5.

For details of Vertical Drain at End Bents, see Sheet No. 6.

For Elevations E-E and F-F and Section thru Wing, see sheet No. 5.

For Sections A-A thru D-D, see Sheet No. 5.

For details of HP Pile Anchors, see Sheet No. 4.

The U bars and pairs of V bars shall be placed parallel to centerline of roadway.

Reinforcing steel shall be shifted to clear piles. U bars shall clear piles by at least 1½".

Strands at end of the beam shall be field bent or, if necessary, cut in the field to maintain 1½" minimum clearance to fill face of end bent.

LEGEND

① - Girder Line

DESIGNED BY:	DMA	5/2020
DETAILED BY:	RCL	5/2020
CHECKED BY:	JCG	6/2020

Note: This drawing is not to scale. Follow dimensions.

END BENT NOS. 1 AND 4 BEARING BEAM DETAILS

STATE OF MISSOURI
KEITH LAWRENCE WETTER
NUMBER E-25019
REGISTERED PROFESSIONAL ENGINEER

THIS SHEET HAS BEEN SIGNED, SEALED AND DATED ELECTRONICALLY

DATE PREPARED 7/2/2020

ROUTE	STATE
J	MO
DISTRICT	SHEET NO.
BR	3

COUNTY: GASCONADE

JOB NO. J5S3176

CONTRACT ID.

PROJECT NO.

BRIDGE NO. A8880

DESCRIPTION

DATE

MISSOURI HIGHWAYS AND TRANSPORTATION COMMISSION
105 WEST CAPITOL
JEFFERSON CITY, MO 65102
1-888-ASK-MODOT (1-888-275-6636)

LOCHNER
16105 W. 113th Street | Suite 107 | Lenexa, KS 66219
Certificate of Authority #F00727076

REV.

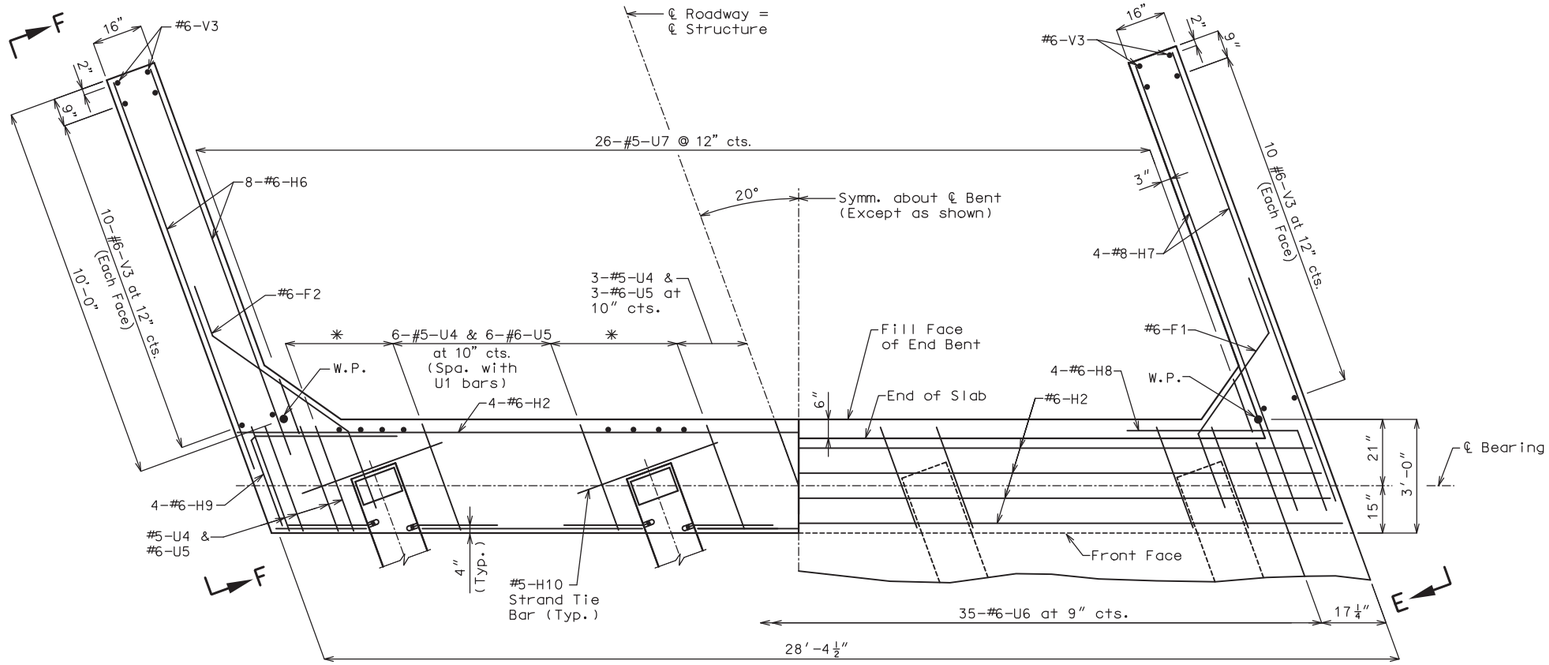

HALF PLAN THROUGH DIAPHRAGM

HALF PLAN THROUGH SLAB

✳ 4-#6-V2 at eq. spa. between U bars (Behind Beam)

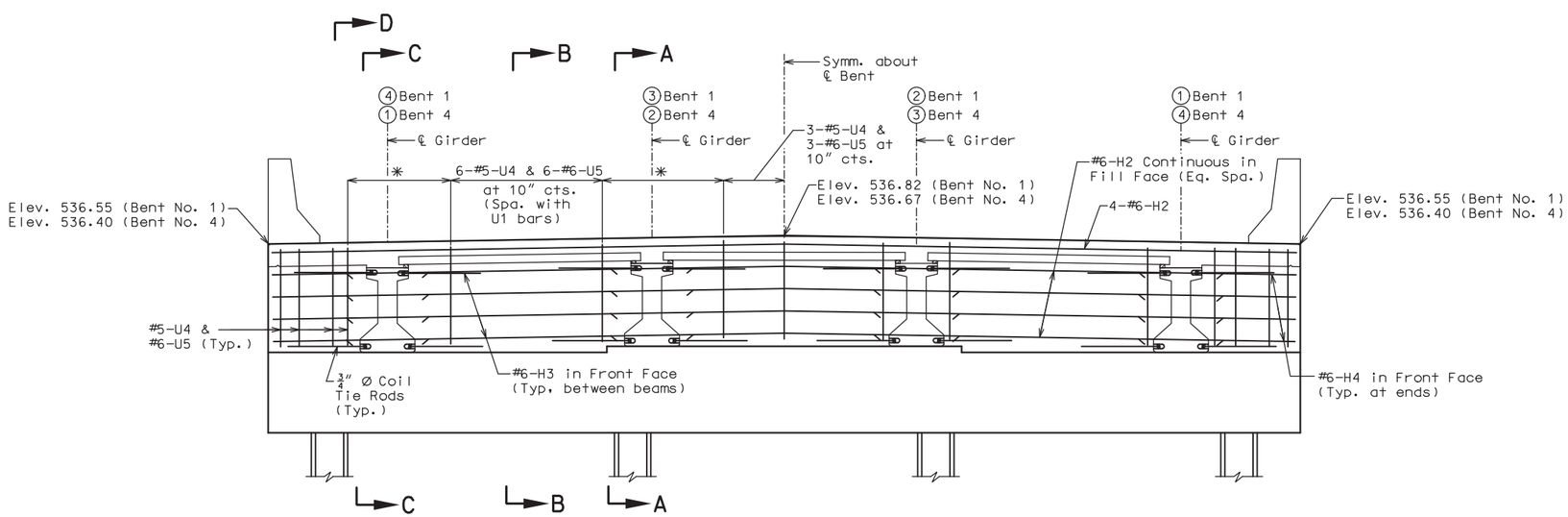

ELEVATION OF DIAPHRAGM AT CENTERLINE OF BEARING
(Keys not shown for clarity)

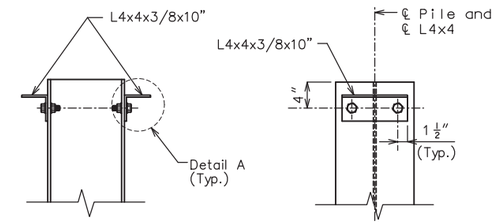

DETAILS OF HP PILE ANCHORS

Notes:
Galvanizing L4x4, 3/4" diameter bolts (ASTM F3125 Grade A325 Type 1 Plain), washers and nuts will not be required.

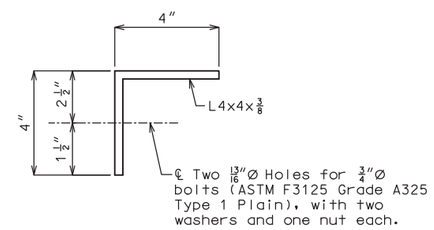

DETAIL A

Notes:

The #6-F1 and #6-F2 bars shall be bent in the field to clear girders.

The U bars and pairs of V bars shall be placed parallel to centerline of roadway.

For location of coil tie rods and #5-H10 bars (strand tie bar), see Sheet No. 10.

LEGEND

(1) - Girder Line

END BENT NOS. 1 AND 4 DIAPHRAGM DETAILS

DESIGNED BY:	DMA	5/2020
DETAILED BY:	RCL	5/2020
CHECKED BY:	JCG	6/2020

Note: This drawing is not to scale. Follow dimensions.

STATE OF MISSOURI
KEITH LAWRENCE WETTER
NUMBER E-25019
REGISTERED PROFESSIONAL ENGINEER

THIS SHEET HAS BEEN SIGNED, SEALED AND DATED ELECTRONICALLY

DATE PREPARED 7/2/2020

ROUTE	STATE
J	MO
DISTRICT	SHEET NO.
BR	4

COUNTY: GASCONADE
JOB NO.: J5S3176
CONTRACT ID.:
PROJECT NO.:
BRIDGE NO.: A8880

DESCRIPTION | DATE

MISSOURI HIGHWAYS AND TRANSPORTATION COMMISSION
105 WEST CAPITOL
JEFFERSON CITY, MO 65102
1-888-ASK-MODOT (1-888-275-6636)

LOCHNER
16105 W. 113th Street | Suite 107 | Lenexa, KS 66219
Certificate of Authority #F00727076

REV.

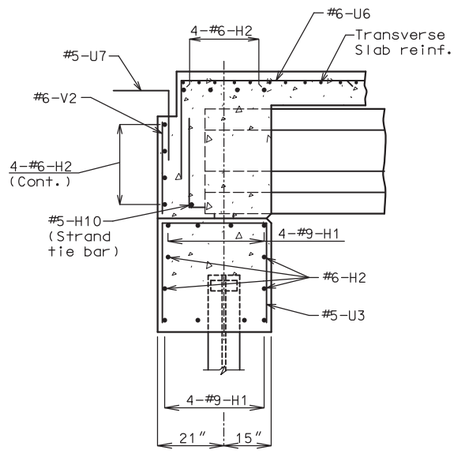

SECTION A-A

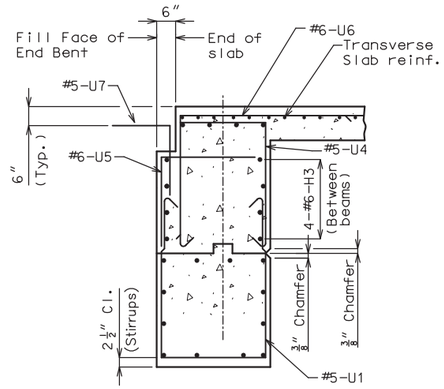

SECTION B-B ‡

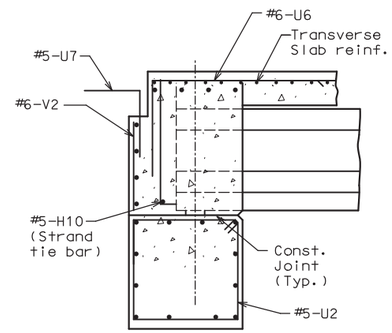

SECTION C-C ‡

‡ See Section A-A for horizontal bars.

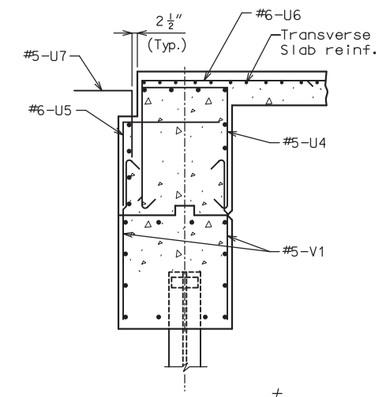

SECTION D-D ‡

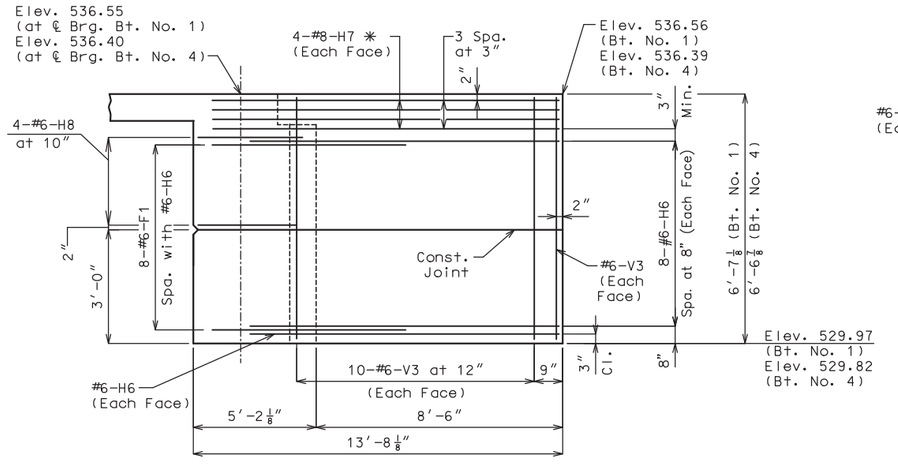

ELEVATION E-E
(Bent No. 1 Left Wing)
(Bent No. 4 Right Wing)

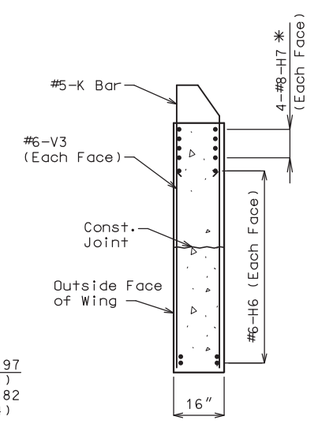

TYPICAL SECTION THRU WING

✱ Placed with grade

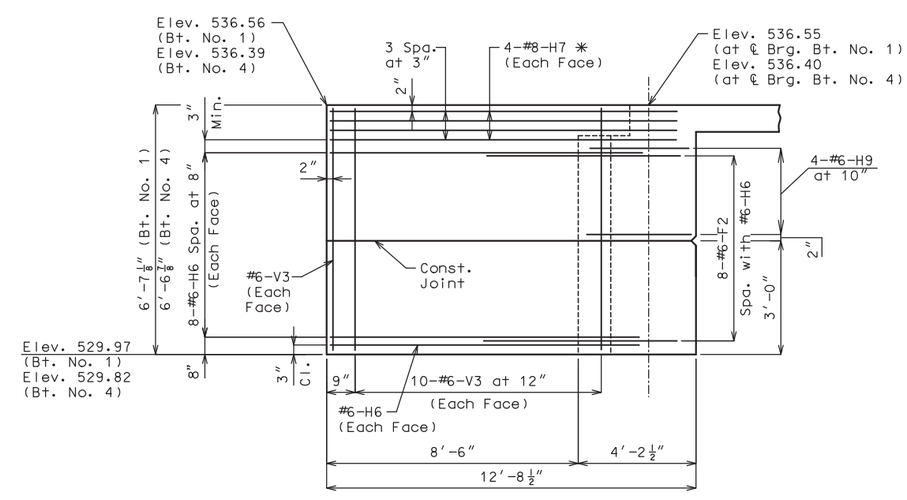

ELEVATION F-F
(Bent No. 1 Right Wing)
(Bent No. 4 Left Wing)

Note:
For reinforcement of the barrier curb, see Sheet No. 18.

END BENT NOS. 1 AND 4 WINGS AND SECTIONS

DESIGNED BY:	DMA	5/2020
DETAILED BY:	RCL	5/2020
CHECKED BY:	JCG	6/2020

Note: This drawing is not to scale. Follow dimensions.

STATE OF MISSOURI
KEITH LAWRENCE WETTER
NUMBER E-25019
REGISTERED PROFESSIONAL ENGINEER

THIS SHEET HAS BEEN SIGNED, SEALED AND DATED ELECTRONICALLY

DATE PREPARED 7/2/2020

ROUTE	STATE
J	MO
DISTRICT	SHEET NO.
BR	5

COUNTY: GASCONADE
JOB NO.: J5S3176
CONTRACT ID.:
PROJECT NO.:
BRIDGE NO.: A8880

DATE	DESCRIPTION

MISSOURI HIGHWAYS AND TRANSPORTATION COMMISSION
105 WEST CAPITOL
JEFFERSON CITY, MO 65102
1-888-ASK-MODOT (1-888-275-6636)

LOCHNER
16105 W. 113th Street | Suite 107 | Lenexa, KS 66219
Certificate of Authority #F00727076

REV.

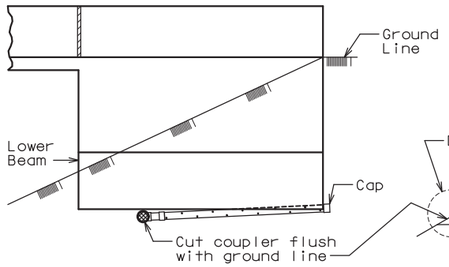

ELEVATION OF WING

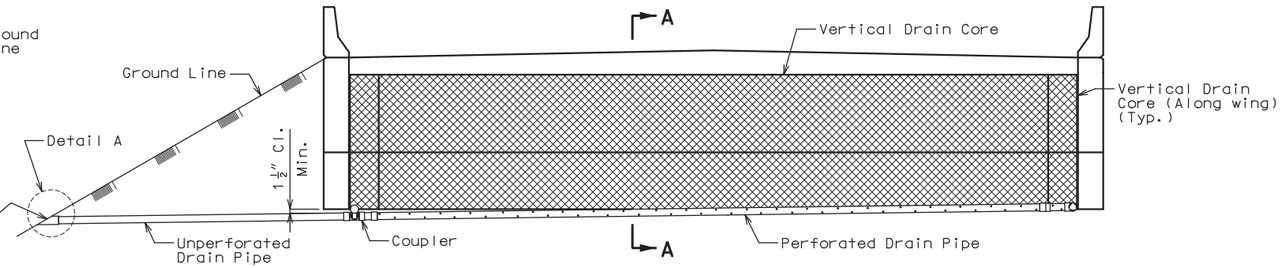

ELEVATION OF END BENT

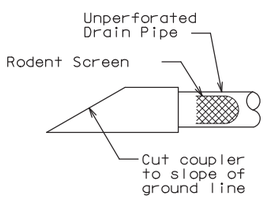

DETAIL A

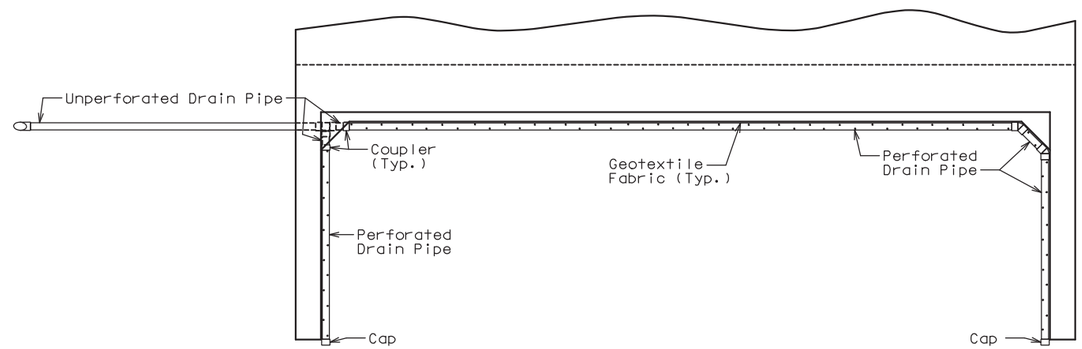

PLAN OF END BENT

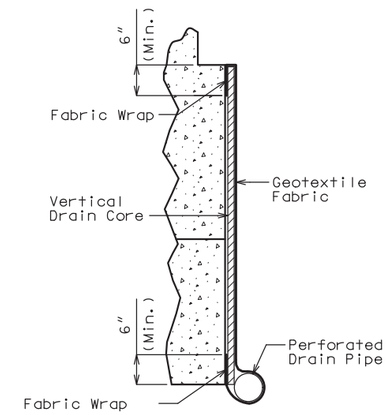

PART SECTION A-A
(Section thru wing similar)

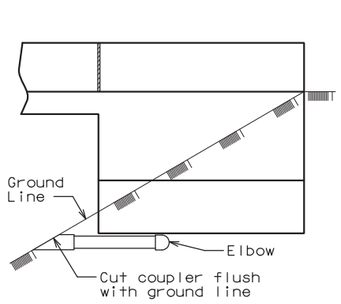

ELEVATION OF WING

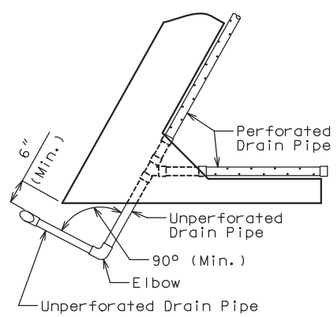

PART PLAN

OPTIONAL TURNED DRAIN
(Use only when straight drain is not practical)

General Notes:

All drain pipe shall be sloped 1 to 2 percent.

Drain pipe may be either 6-inch diameter corrugated metallic-coated steel pipe underdrain, 4-inch diameter corrugated polyvinyl chloride (PVC) drain pipe, or 4-inch diameter corrugated polyethylene (PE) drain pipe.

Drain pipe shall be placed at fill face of end bent and inside face of wings. The pipe shall slope to lowest grade of ground line, also missing the lower beam of end bent by a minimum of 1 1/2 inches.

Perforated pipe shall be placed at fill face side and inside face of wings at the bottom of end bent and plain pipe shall be used where the vertical drain ends to the exit at ground line.

VERTICAL DRAIN AT END BENTS
(Squared end bent shown, skewed end bent similar)

DESIGNED BY:	KLW	3/2020
DETAILED BY:	JTC	3/2020
CHECKED BY:	JCG	5/2020

Note: This drawing is not to scale. Follow dimensions.

STATE OF MISSOURI
KEITH LAWRENCE WETTER
NUMBER E-25019
REGISTERED PROFESSIONAL ENGINEER

THIS SHEET HAS BEEN SIGNED, SEALED AND DATED ELECTRONICALLY

DATE PREPARED 7/2/2020

ROUTE	STATE
J	MO
DISTRICT	SHEET NO.
BR	6

COUNTY: GASCONADE
JOB NO.: J5S3176
CONTRACT ID.:
PROJECT NO.:
BRIDGE NO.: A8880

DESCRIPTION	DATE

MISSOURI HIGHWAYS AND TRANSPORTATION COMMISSION
105 WEST CAPITOL
JEFFERSON CITY, MO 65102
1-888-ASK-MODOT (1-888-275-6636)

LOCHNER
16105 W. 113th Street | Suite 107 | Lenexa, KS 66219
Certificate of Authority #F00727076

REV.

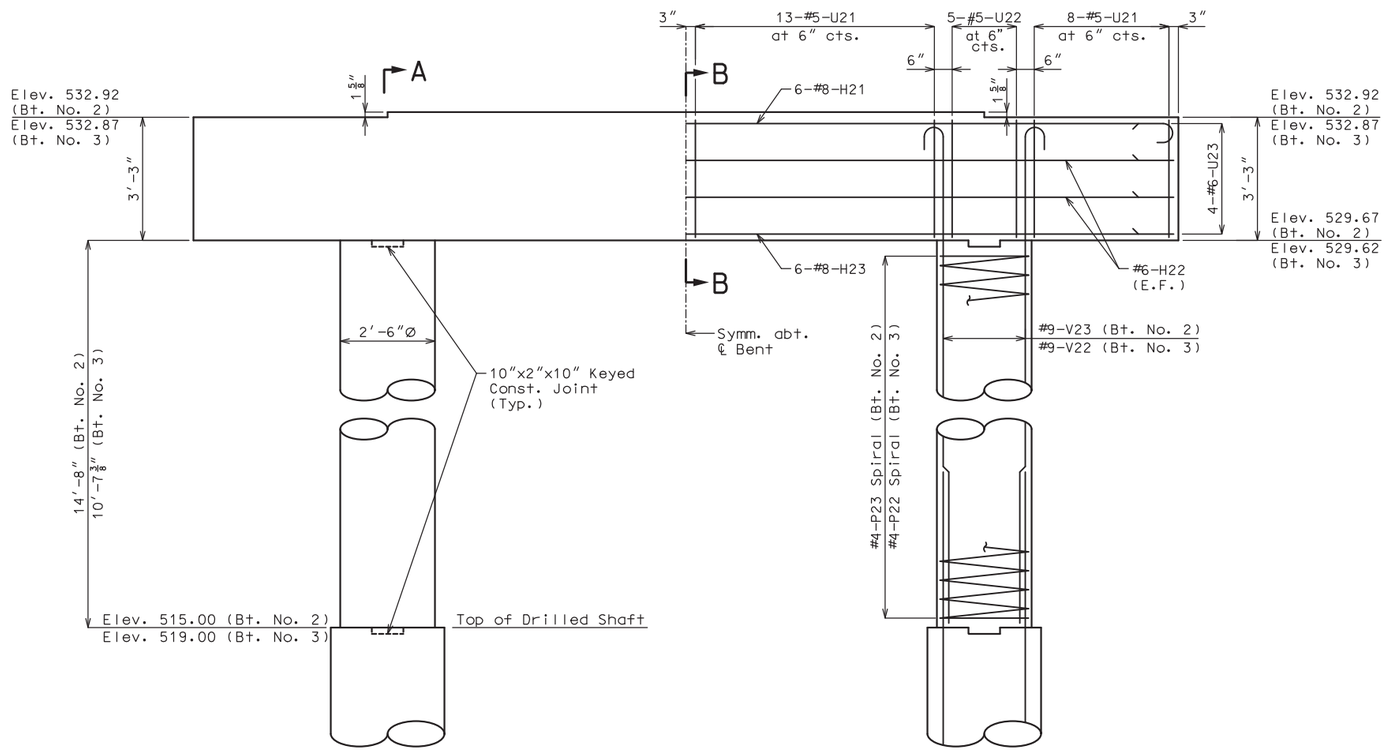

ELEVATION

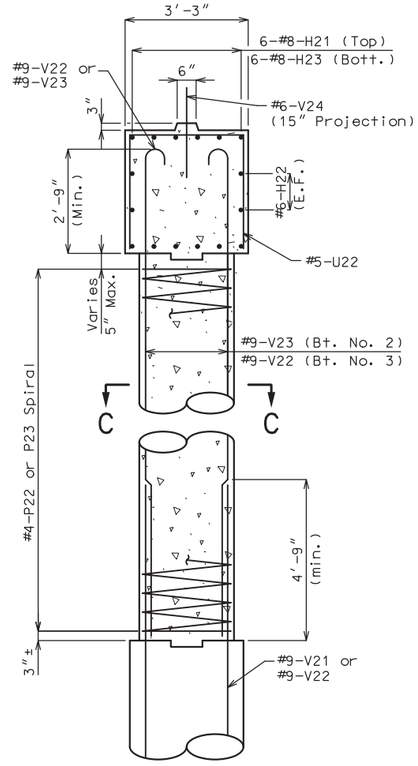

SECTION A-A

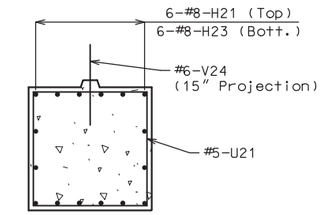

SECTION B-B

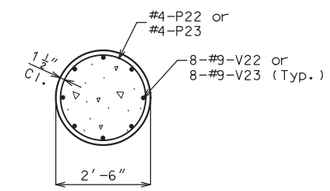

SECTION C-C

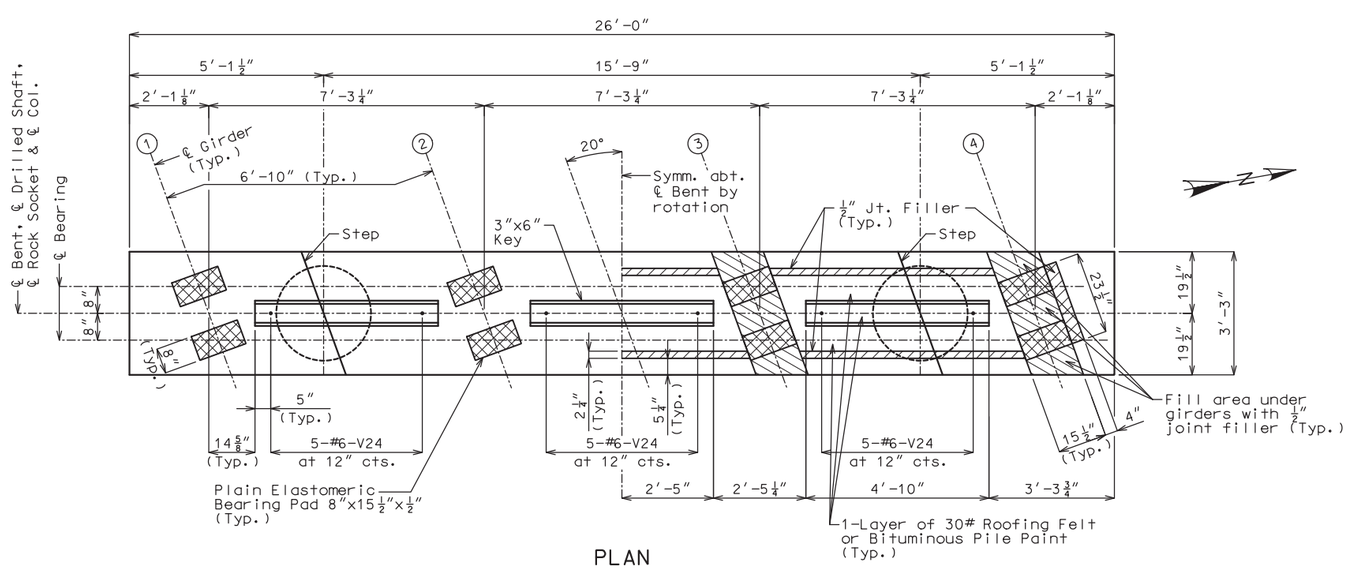

PLAN

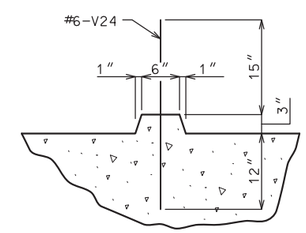

DETAIL OF KEY

Notes:
For details of Drilled Shaft, see Sheet No. 8.

At the Contractor's option, the hooks of V-bars embedded in the beam cap may be oriented inward or outward for Seismic Category A.

LEGEND
(E.F.) = Each Face

DETAILS OF INTERMEDIATE BENT NOS. 2 AND 3
(SHEET 1 OF 2)

DESIGNED BY:	KLW	5/2020
DETAILED BY:	JTC	5/2020
CHECKED BY:	DMA	6/2020

Note: This drawing is not to scale. Follow dimensions.

STATE OF MISSOURI
KEITH LAWRENCE WETTER
NUMBER E-25019
REGISTERED PROFESSIONAL ENGINEER

THIS SHEET HAS BEEN SIGNED, SEALED AND DATED ELECTRONICALLY

DATE PREPARED 7/2/2020

ROUTE	STATE
J	MO
DISTRICT	SHEET NO.
BR	7

COUNTY: GASCONADE
JOB NO.: J5S3176
CONTRACT ID.:
PROJECT NO.:
BRIDGE NO.: A8880

DESCRIPTION
DATE

MISSOURI HIGHWAYS AND TRANSPORTATION COMMISSION
105 WEST CAPITOL
JEFFERSON CITY, MO 65102
1-888-ASK-MODOT (1-888-275-6636)

LOCHNER
16105 W. 113th Street | Suite 107 | Lenexa, KS 66219
Certificate of Authority #F00727076

REV.

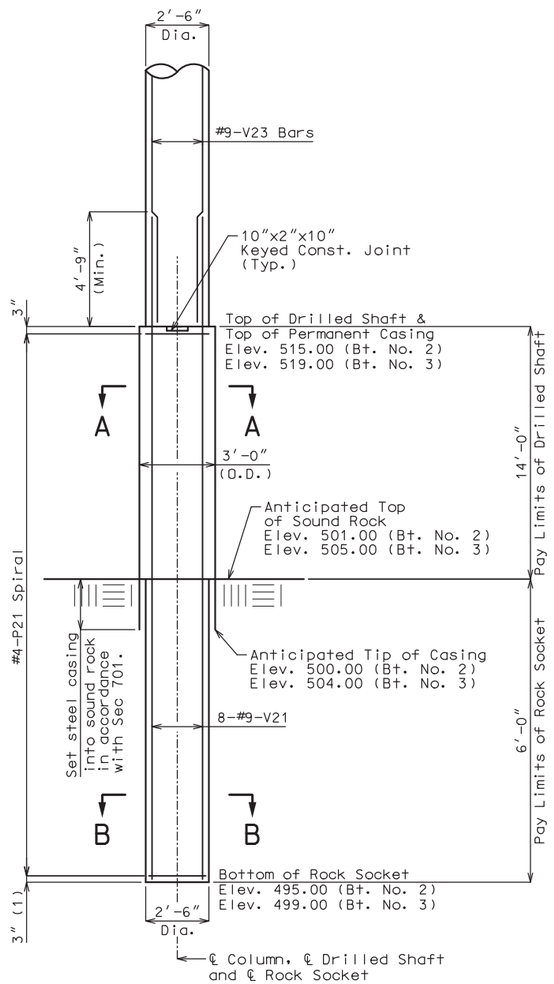

ELEVATION OF DRILLED SHAFTS AND ROCK SOCKETS

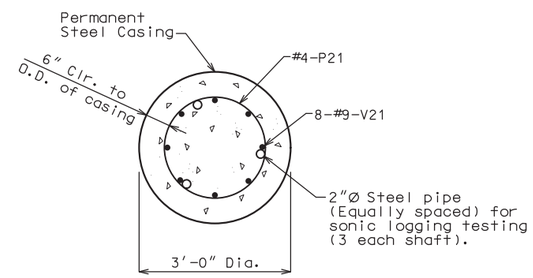

SECTION A-A

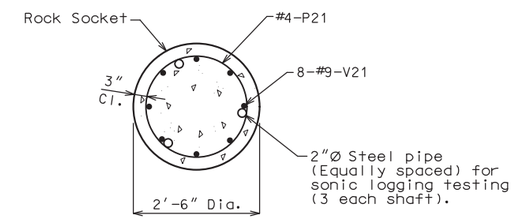

SECTION B-B

(1) For possible increase in drilled shaft or rock socket depth, 4-#4-P24 hoops have been added for placing at 12" cts. (Max.) below the P21 or P22 spiral at the bottom of rock socket.

Estimated Quantities

Item		Quantity Bent No. 2	Quantity Bent No. 3
Drilled Shafts (3 ft. 0 in. Dia.)	linear foot	28.0	28.0
Rock Sockets (2 ft. 6 in. Dia.)	linear foot	12.0	12.0
Video Camera Inspection	each	2	2
Foundation Inspection Holes	linear foot	32.0	32.0
Sonic Logging Testing	each	2	2
Class B Concrete (Substructure)	cu. yard	15.8	14.3
Reinforcing Steel (Bridges)	pounds	4,710	4,450

Notes:
These quantities are included in the estimated quantities table on Sheet No. 2.
All Drilled Shaft and Rock Socket reinforcements are included in substructure quantities.

DETAILS OF INTERMEDIATE BENT NOS. 2 AND 3
(SHEET 2 OF 2)

DESIGNED BY:	KLW	5/2020
DETAILED BY:	JTC	5/2020
CHECKED BY:	DMA	6/2020

Note: This drawing is not to scale. Follow dimensions.

STATE OF MISSOURI
KEITH LAWRENCE WETTER
NUMBER E-25019
REGISTERED PROFESSIONAL ENGINEER

THIS SHEET HAS BEEN SIGNED, SEALED AND DATED ELECTRONICALLY

DATE PREPARED 7/2/2020

ROUTE	STATE
J	MO
DISTRICT	SHEET NO.
BR	8

COUNTY: GASCONADE
JOB NO. J5S3176
CONTRACT ID.
PROJECT NO.
BRIDGE NO. A8880

DESCRIPTION | DATE

MISSOURI HIGHWAYS AND TRANSPORTATION COMMISSION
105 WEST CAPITOL
JEFFERSON CITY, MO 65102
1-888-ASK-MODOT (1-888-275-6636)

LOCHNER
16105 W. 113th Street | Suite 107 | Lenexa, KS 66219
Certificate of Authority #F00727076

REV.

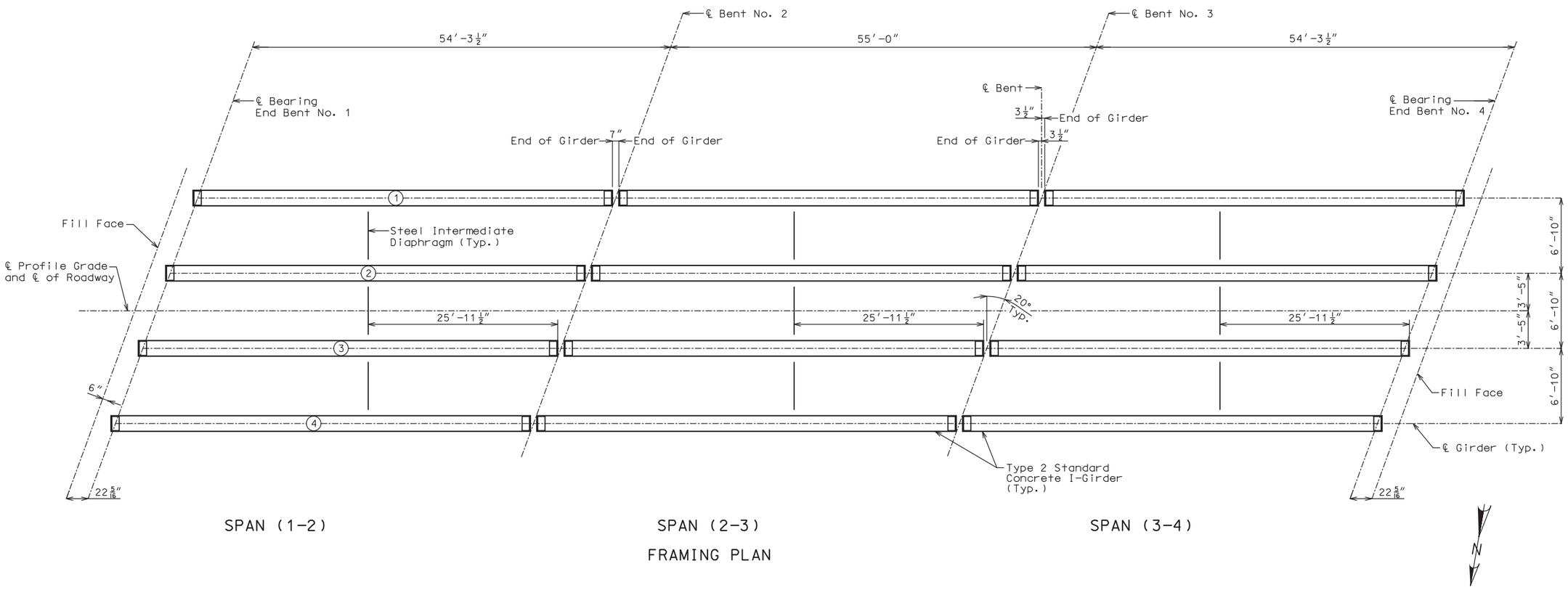

FRAMING PLAN

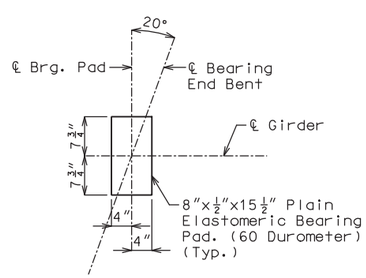

END BENT BEARING PAD LAYOUT

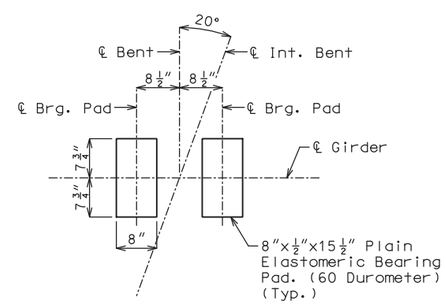

INTERMEDIATE BENT BEARING PAD LAYOUT

Note:

All layout dimensions are horizontal.

For details of Steel Intermediate Diaphragm, See Sheet No. 11.

LEGEND

① - Girder Line

GIRDER FRAMING PLAN

DESIGNED BY:	KLW	5/2020
DETAILED BY:	RCL	5/2020
CHECKED BY:	DMA	5/2020

Note: This drawing is not to scale. Follow dimensions.

STATE OF MISSOURI
KEITH LAWRENCE WETTER
NUMBER E-25019
REGISTERED PROFESSIONAL ENGINEER

THIS SHEET HAS BEEN SIGNED, SEALED AND DATED ELECTRONICALLY

DATE PREPARED	
7/2/2020	
ROUTE: J	STATE: MO
DISTRICT: BR	SHEET NO.: 9
COUNTY: GASCONADE	
JOB NO.: J5S3176	
CONTRACT ID.	
PROJECT NO.	
BRIDGE NO.: A8880	

DESCRIPTION

DATE

MISSOURI HIGHWAYS AND TRANSPORTATION COMMISSION
105 WEST CAPITOL
JEFFERSON CITY, MO 65102
1-888-ASK-MODOT (1-888-275-6636)

LOCHNER
16105 W. 113th Street | Suite 107 | Lenexa, KS 66219
Certificate of Authority #F00727076

REV.

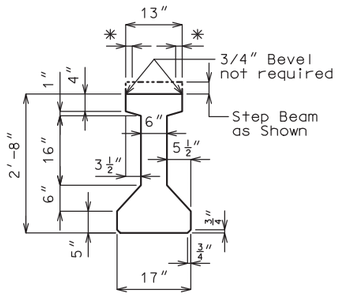

GIRDER DIMENSIONS

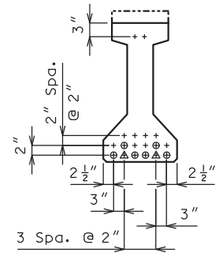

⊕ Cut and Shop bend with 2′-6″ projection
△ Strands debonded for 8′-0″ from end of girder.

STRAND ARRANGEMENT

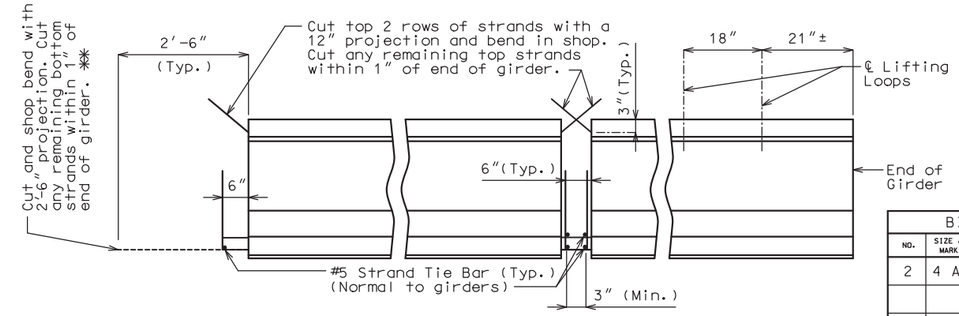

END BENT — INTERMEDIATE BENT

STRAND DETAILS AT GIRDER ENDS

LOCATION OF LIFTING LOOPS

Fabricator shall be responsible for location and design of lifting devices.

Concrete for prestressed girders shall be Class A-1 with f′c = 8000 psi and f′ci = 6500 psi.

(+) indicates prestressing strand.

Use 18 strands with an initial prestress force of 791.0 kips.

Prestressing tendons shall be uncoated, seven-wire, low-relaxation strands, 0.6 inch diameter in accordance with AASHTO M 203, Grade 270. Pretensioned members shall be in accordance with Sec 1029.

✱ At contractor's option a 1 1/2″ to 1 3/4″ smooth finish strip is permitted to facilitate placement of preformed fiber expansion joint material or expanded or extruded polystyrene bedding material for the prestressed panels.

✱✱ At the contractor's option the location for bent-up strands may be varied from that shown for fully bonded strands only. The total number of bent-up strands shall not be changed. One strand tie bar is required for each layer of bent-up strands except at end bents which require one bar on the bottom layer of strands only. No additional payment will be made if additional strand tie bars are required.

BILL OF REINFORCING STEEL - EACH GIRDER

NO.	SIZE & MARK	ACTUAL LENGTH	SHAPE	BENDING DIAGRAM
2	4 A1	54′-2″	20	
150	5 B1	4′-1″	11	
16	6 B2	3′-5″	11	
83	4 C1	13″	10	
166	4 D1	2′-3″	9	

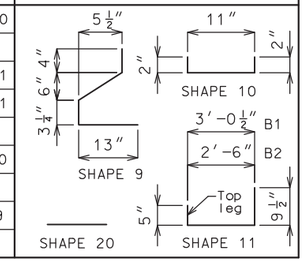

All dimensions are out to out.

Hooks and bends shall be in accordance with the CRSI Manual of Standard Practice for Detailing Reinforced Concrete Structures, Stirrup and Tie Dimensions.

Actual lengths are measured along centerline of bar to the nearest inch.

Minimum clearance to reinforcing shall be 1″.

All reinforcement shall be Grade 60.

The two D1 bars may be furnished as one bar at the fabricator's option.

All B1 bars shall be epoxy coated.

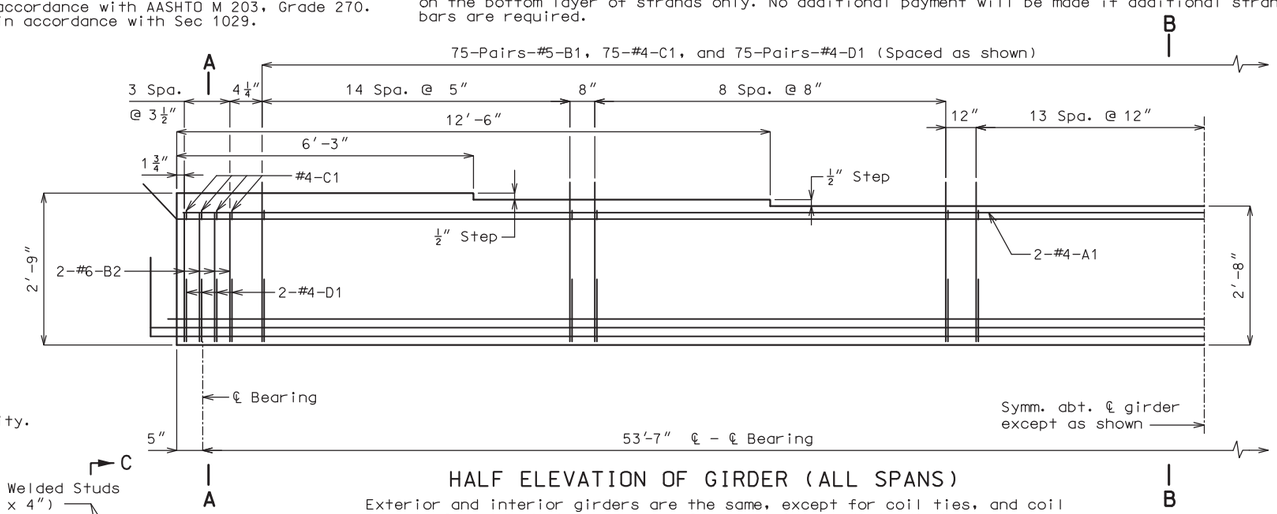

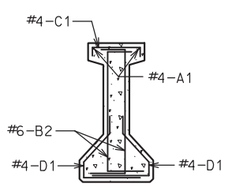

SECTION A-A

Strands not shown for clarity.

HALF ELEVATION OF GIRDER (ALL SPANS)

Exterior and interior girders are the same, except for coil ties, and coil inserts for slab drains and holes for steel intermediate diaphragms.

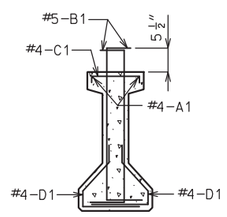

SECTION B-B

Strands not shown for clarity.

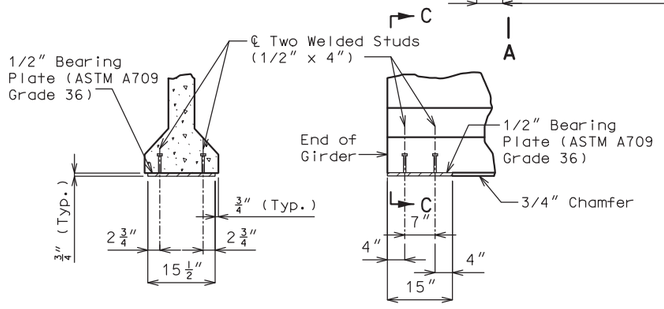

SECTION C-C — PART ELEVATION AT END OF GIRDER

BEARING PLATE DETAILS

Galvanize the 1/2″ bearing plate (ASTM A709 Grade 36) in accordance with ASTM A123.

Cost of furnishing, galvanizing, and installing the 1/2″ bearing plate (ASTM A709 Grade 36) and welded studs in the prestressed girder will be considered completely covered by the contract unit price for Prestressed Concrete I-Girder.

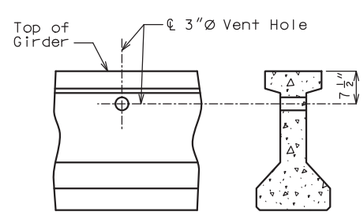

PART ELEVATION OF GIRDER — PART SECTION NEAR VENT HOLE

DETAILS OF VENT HOLE

Place vent holes at or near upgrade 1/3 point of girders and clear reinforcing steel or strands by 1 1/2″ minimum and steel intermediate diaphragm bolt connections by 6″ minimum.

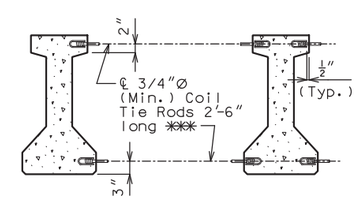

EXTERIOR GIRDERS AT INT. BENTS — EXTERIOR GIRDERS AT END BENTS, INTERIOR GIRDERS AT ALL BENTS

DETAILS OF COIL TIES

✱✱✱ Length of coil tie rods at exterior face of exterior girders at end bents = 2′-4″.

Cost of 3/4″Ø coil tie rods placed in diaphragms will be considered completely covered by the contract unit price for Prestressed Concrete I-Girder.

Coil ties shall be held in place in the forms by slotted wire-setting-studs projecting through forms. Studs are to be left in place or replaced with temporary plugs until girders are erected, then replaced by coil tie rods.

For location of coil inserts at slab drains, see Sheet No. 14.

For location of coil ties at concrete bent diaphragms, see Sheet Nos. 4 & 12.

The 1 1/2″Ø holes shall be cast in the web for steel intermediate diaphragms. Drilling is not allowed. For location of holes and details of steel intermediate diaphragms, see Sheet No. 11.

For Girder Camber Diagram, see Sheet No. 15.

DESIGNED BY:	KLW	5/2020
DETAILED BY:	RCL	5/2020
CHECKED BY:	JCG	5/2020

Note: This drawing is not to scale. Follow dimensions.

STATE OF MISSOURI — KEITH LAWRENCE WETTER — NUMBER E-25019 — REGISTERED PROFESSIONAL ENGINEER

THIS SHEET HAS BEEN SIGNED, SEALED AND DATED ELECTRONICALLY

DATE PREPARED 7/2/2020

ROUTE	STATE
J	MO
DISTRICT	SHEET NO.
BR	10

COUNTY: GASCONADE

JOB NO. J5S3176

CONTRACT ID.

PROJECT NO.

BRIDGE NO. A8880

REV.	DESCRIPTION	DATE

MISSOURI HIGHWAYS AND TRANSPORTATION COMMISSION — 105 WEST CAPITOL, JEFFERSON CITY, MO 65102 — 1-888-ASK-MODOT (1-888-275-6636)

LOCHNER — 16105 W. 113th Street | Suite 107 | Lenexa, KS 66219 — Certificate of Authority #F00727076

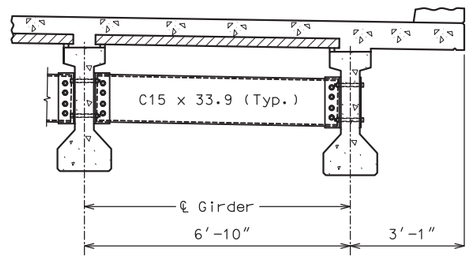

PART SECTION SHOWING
INTERMEDIATE DIAPHRAGMS

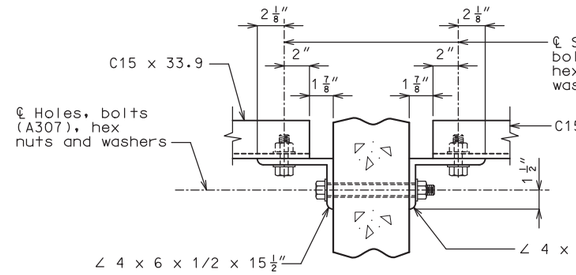

SECTION C-C

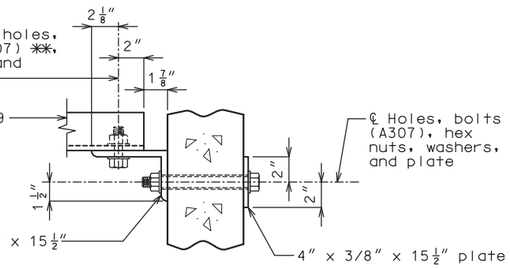

SECTION D-D

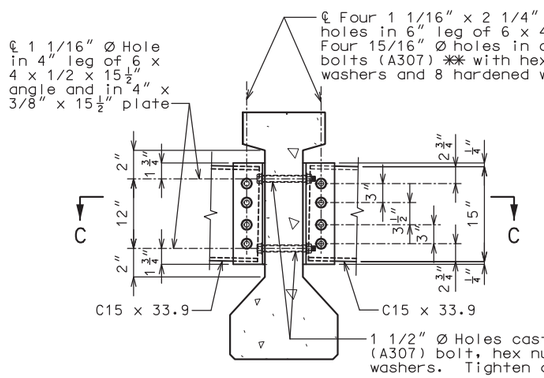

SECTION THRU INT. GIRDER
AT DIAPHRAGM

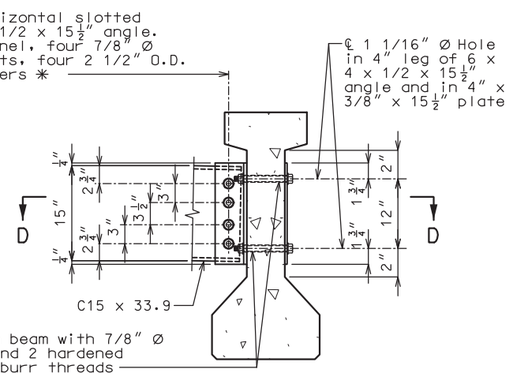

SECTION THRU EXT. GIRDER
AT DIAPHRAGM

STEEL DIAPHRAGM NOTES:

✱ In lieu of 2 1/2" outside diameter washers, contractor may substitute a 3/16" (Min. thickness) plate with four 15/16" Ø holes and one hardened washer per bolt.

✱✱ Bolts shall be tightened to provide a tension of one-half that specified in Sec 712 for high strength bolt installation. A325 bolts may be substituted for and installed in accordance with the requirements for the specified A307 bolts.

All diaphragm materials including bolts, nuts, and washers shall be galvanized.

Fabricated structural steel shall be ASTM A709 Grade 36 except as noted.

Payment for furnishing and installing steel intermediate diaphragms will be considered completely covered by the contract unit price for Steel Intermediate Diaphragm for P/S Concrete Girders.

Shop drawings will not be required for steel intermediate diaphragms and angle connections.

For location of intermediate diaphragms, see Sheet No. 9.

STEEL INTERMEDIATE DIAPHRAGM DETAILS

DESIGNED BY:	KLW	5/2020
DETAILED BY:	RCL	5/2020
CHECKED BY:	JCG	5/2020

Note: This drawing is not to scale. Follow dimensions.

STATE OF MISSOURI
KEITH LAWRENCE WETTER
NUMBER E-25019
REGISTERED PROFESSIONAL ENGINEER

THIS SHEET HAS BEEN SIGNED, SEALED AND DATED ELECTRONICALLY

DATE PREPARED 7/2/2020

ROUTE	STATE
J	MO
DISTRICT	SHEET NO.
BR	11

COUNTY: GASCONADE
JOB NO.: J5S3176
CONTRACT ID.:
PROJECT NO.:
BRIDGE NO.: A8880

DESCRIPTION	DATE

MISSOURI HIGHWAYS AND TRANSPORTATION COMMISSION
105 WEST CAPITOL
JEFFERSON CITY, MO 65102
1-888-ASK-MODOT (1-888-275-6636)

LOCHNER
16105 W. 113th Street | Suite 107 | Lenexa, KS 66219
Certificate of Authority #F00727076

REV.

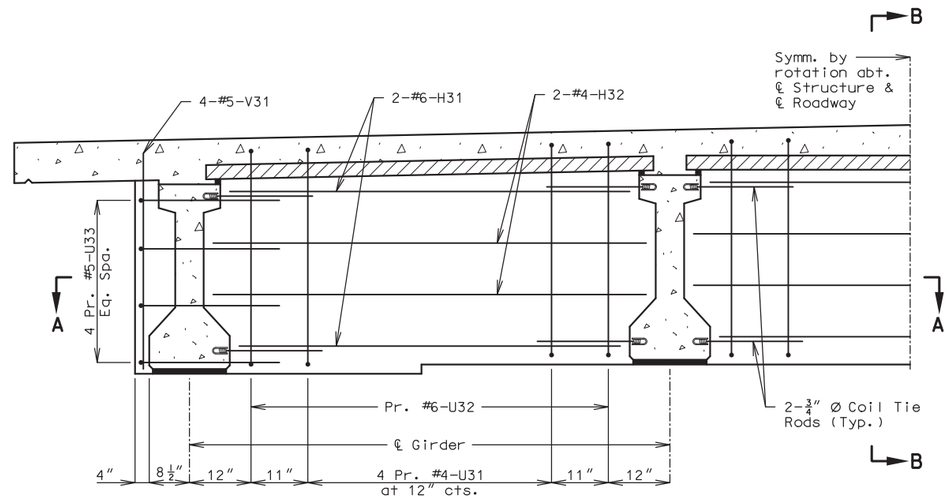

HALF SECTION NEAR INT. BENTS

(Normal to ℄ Structure)

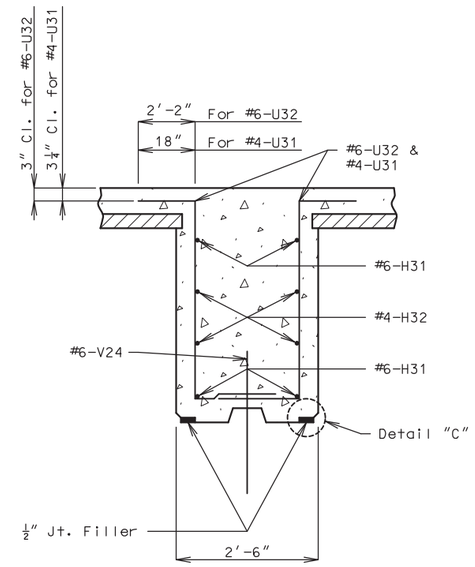

SECTION B-B

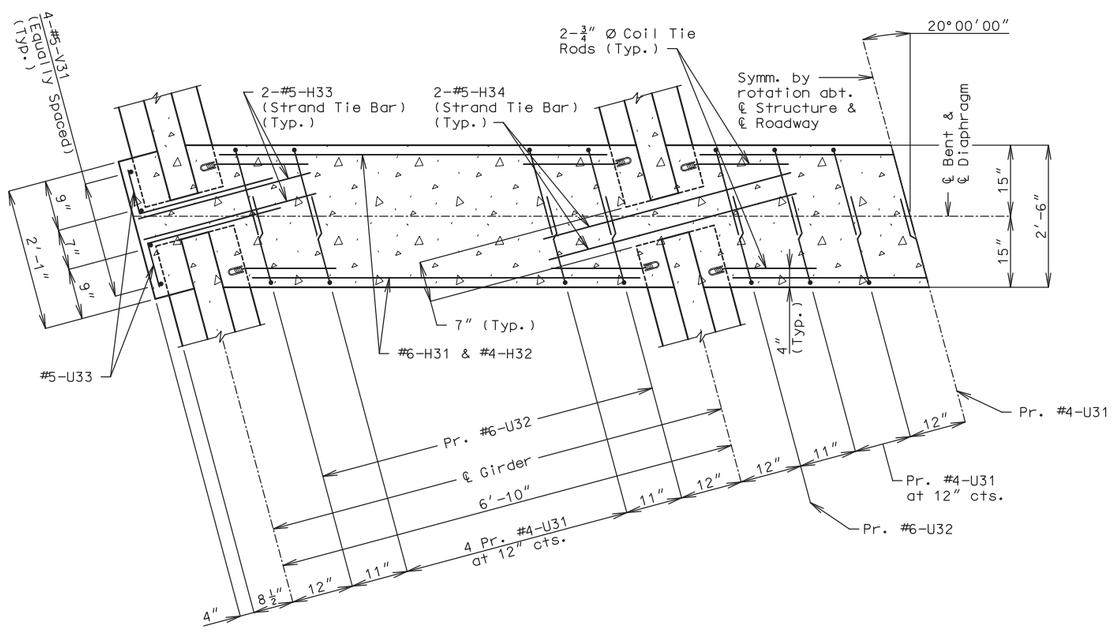

SECTION A-A

Notes:

Diaphragms at intermediate bents shall be built vertical.

For location of #5-H33 & #5-H34 (Strand tie bars) and coil tie rods, see Sheet No. 10.

All U-bars in diaphragm are to be placed parallel to ℄ Roadway.

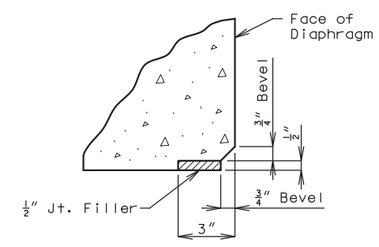

DETAIL "C"

DETAILS OF DIAPHRAGMS AT INTERMEDIATE BENTS

DESIGNED BY:	KLW	5/2020
DETAILED BY:	JTC	5/2020
CHECKED BY:	JCG	5/2020

Note: This drawing is not to scale. Follow dimensions.

STATE OF MISSOURI
KEITH LAWRENCE WETTER
NUMBER E-25019
REGISTERED PROFESSIONAL ENGINEER

THIS SHEET HAS BEEN SIGNED, SEALED AND DATED ELECTRONICALLY

DATE PREPARED 7/2/2020

ROUTE	STATE
J	MO
DISTRICT	SHEET NO.
BR	12

COUNTY: GASCONADE

JOB NO. J5S3176

CONTRACT ID.

PROJECT NO.

BRIDGE NO. A8880

DESCRIPTION

DATE

MISSOURI HIGHWAYS AND TRANSPORTATION COMMISSION
105 WEST CAPITOL
JEFFERSON CITY, MO 65102
1-888-ASK-MODOT (1-888-275-6636)

LOCHNER
16105 W. 113th Street | Suite 107 | Lenexa, KS 66219
Certificate of Authority #F00727076

REV.

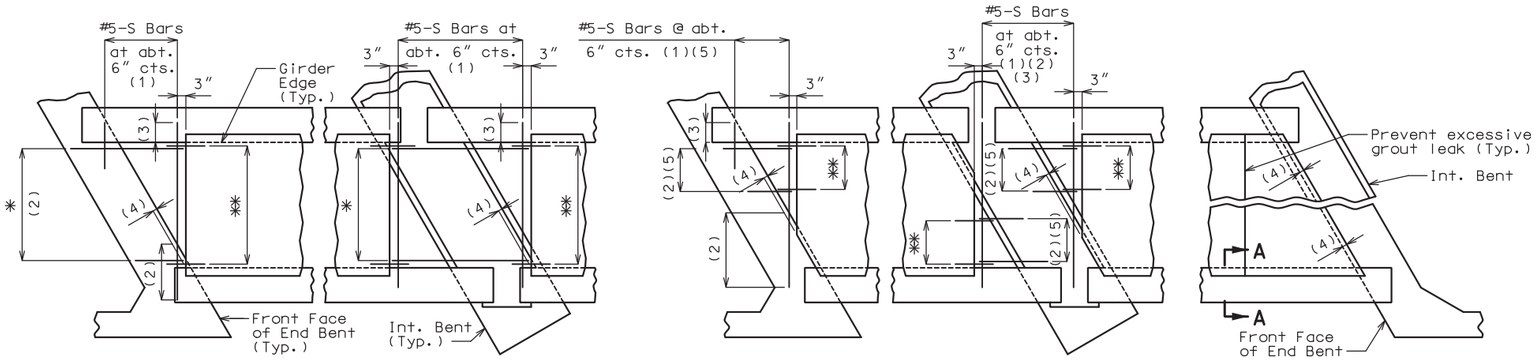

SQUARED END PANELS OR TRUNCATED END PANELS

SKEWED END PANELS

PLAN SHOWING PANELS PLACEMENT

✱ #5-S Bars at abt. 9" cts. (1)
✱✱ #3-P1 at 12" cts. (End panels only)

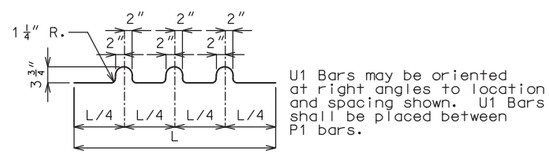

BENDING DIAGRAM FOR U1 BAR

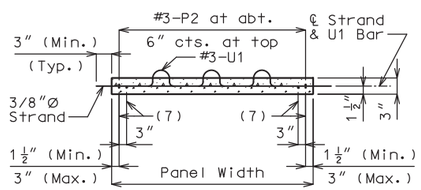

SECTION B-B

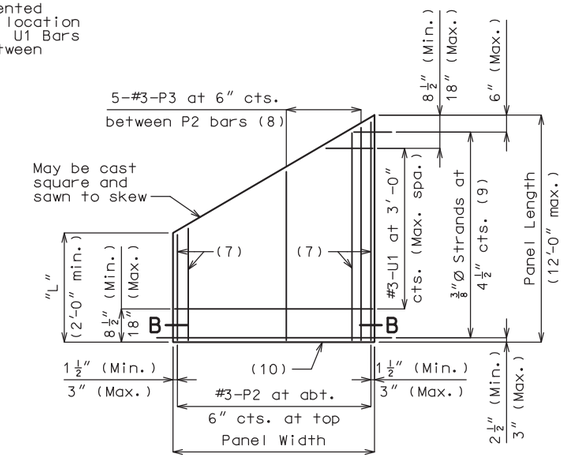

PLAN OF OPTIONAL SKEWED END PANEL

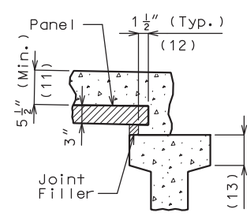

SECTION A-A

Joint Filler Dimensions		
Width	Height	
	Min.	Max.
1 1/2"	1"	2"

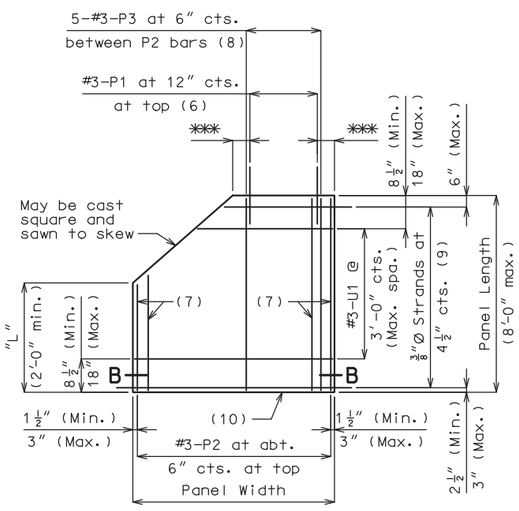

PLAN OF OPTIONAL TRUNCATED END PANEL

✱✱✱ 3" (Min.), 6" (Max.)

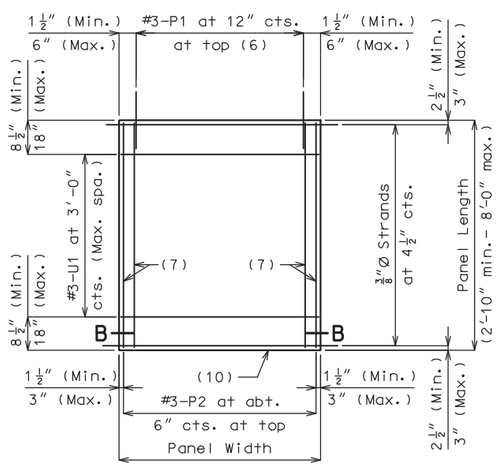

PLAN OF SQUARED PANEL

DETAILS OF PRESTRESSED PANELS

Reference Notes:

Plan of Panels Placement:

(1) S-bars shown are bottom steel in slab between panels and used with squared and truncated end panels only.

(2) Extend S-bars 18 inches beyond the front face of end bents and int. bents for squared and truncated end panels only.

(3) Extend S-bars 9 inches beyond edge of girder (Typ.).

(4) End panels shall be dimensioned 1/2" min. to 1 1/2" max. from the inside face of diaphragm.

(5) For truncated end panels, use a min. of #5-S bars at 6" crossings in openings, or min. 4x4-W7xW7.

Plans of Panels:

(6) For end panels only, P1 bars shall be 2'-0" in length and embedded 12". P1 bars will not be required for panels at squared integral end bents.

(7) #3-P2 bars near edge of panel at bottom (under strands).

(8) Use #3-P3 bars if panel is skewed 45° or greater.

(9) Any strand 2'-0" or shorter shall have a #4 reinforcing bar on each side of it, centered between strands. Strands 2'-0", or shorter may then be debonded at the fabricator's option.

(10) Optional 1/2" x 45° Chamfer one or both sides at bottom.

Section A-A:

(11) Slab thickness over prestressed panels varies due to girder camber. In order to maintain minimum slab thickness, it may be necessary to raise the grade uniformly throughout the structure. No payment will be made for additional labor or materials required for necessary grade adjustment.

(12) Contractor shall ensure proper consolidation under and between panels.

(13) At the contractor's option, the variation in slab thickness over prestressed panels may be eliminated or reduced by increasing and varying the girder top flange thickness. Dimensions shall be shown on the shop drawings.

General Notes:

Prestressed Panels:

Concrete for prestressed panels shall be Class A-1 with f'c = 6,000 psi, f'ci = 4,000 psi.

The top surface of all panels shall receive a scored finish with a depth of scoring of 1/8" perpendicular to the prestressing strands in the panels.

Prestressing tendons shall be high-tensile strength, uncoated, seven-wire, low-relaxation strands for prestressed concrete in accordance with AASHTO M 203 Grade 270, with nominal diameter of strand = 3/8" and nominal area = 0.085 sq.in. and minimum ultimate strength = 22.95 kips (270 ksi). Larger strands may be used with the same spacing and initial tension.

Initial prestressing force = 17.2 kips/strand.

The method and sequence of releasing the strands shall be shown on the shop drawings.

Suitable anchorage devices for lifting panels may be cast in panels, provided the devices are shown on the shop drawings and approved by the engineer. Panel lengths shall be determined by the contractor and shown on the shop drawings.

When squared end panels are used at skewed bents, the skewed portion shall be cast full depth. No separate payment will be made for additional concrete and reinforcing required.

Support from diaphragm forms is required under the optional skewed end until cast-in-place concrete has reached 3,000 psi compressive strength.

Prestressed panels shall be brought to saturated surface-dry (SSD) condition just prior to the deck pour. There shall be no free standing water on the panels or in the area to be cast.

The prestressed panel quantities are not included in the table of estimated quantities for the slab.

Reinforcing Steel:

All dimensions are out to out.

Hooks and bends shall be in accordance with the CRSI Manual of Standard Practice for Detailing Reinforced Concrete Structures, Stirrup and Tie Dimensions.

Minimum clearance to reinforcing steel shall be 1 1/2", unless otherwise shown.

If U1 bars interfere with placement of slab steel, U1 loops may be bent over, as necessary, to clear slab steel.

Deformed welded wire reinforcement (WWR) providing a minimum area of reinforcing perpendicular to strands of 0.22 sq in./ft, with spacing parallel to strands sufficient to ensure proper handling, may be used in lieu of the #3-P2 bars shown. Wire diameter shall not be larger than 0.375 inch. The above alternative reinforcement criteria may be used in lieu of the #3-P3 bars, when required, and placed over a width not less than 2 feet.

The following reinforcing steel shall be tied securely to the strands with the following maximum spacing in each direction:
#3-P2 bars at 16 inches.
WWR at 24 inches.

The #3-U1 bars shall be tied securely to #3-P2 bars, to WWR or to strands (when placed between P1 bars) at about 3-foot centers.

Minimum reinforcement steel length shall be 2'-0".

All reinforcement other than prestressing strands shall be epoxy coated.

Precast panels may be in contact with stirrup reinforcing in diaphragms.

S-bars are not listed in the bill of reinforcing.

Cost of S-bars will be considered completely covered by the contract unit price for the slab.

Joint Filler:

Joint filler shall be preformed fiber expansion joint material in accordance with Sec 1057 or expanded or extruded polystyrene bedding material in accordance with Sec 1073.

Use Slab Haunching Diagram on Sheet No. 15 for determining thickness of joint filler within the limits noted in the table of Joint Filler Dimensions.

Thicker material may be used on one or both sides of the girder to reduce cast-in-place concrete thickness to within tolerances.

The same thickness of preformed fiber expansion joint material shall be used under any one edge of any panel except at locations where top flange thickness may be stepped. The maximum change in thickness between adjacent panels shall be 1/4 inch. The polystyrene bedding material may be cut with a transition to match haunch height above top of flange.

Joint filler shall be glued to the girder. When thickness exceeds 1 1/2 inches, the joint filler shall be glued top and bottom. The glue used shall be the type recommended by the joint filler manufacturer.

Edges of panels shall be uniformly seated on the joint filler before slab reinforcement is placed.

Sheet No. 13 of 25

DESIGNED BY:	KLW	3/2020
DETAILED BY:	JTC	3/2020
CHECKED BY:	JCG	5/2020

Note: This drawing is not to scale. Follow dimensions.

STATE OF MISSOURI — KEITH LAWRENCE WETTER — NUMBER E-25019 — REGISTERED PROFESSIONAL ENGINEER

THIS SHEET HAS BEEN SIGNED, SEALED AND DATED ELECTRONICALLY

DATE PREPARED: 7/2/2020

ROUTE	STATE
J	MO
DISTRICT	SHEET NO.
BR	13

COUNTY: GASCONADE

JOB NO. J5S3176

CONTRACT ID.

PROJECT NO.

BRIDGE NO. A8880

DATE	DESCRIPTION

MISSOURI HIGHWAYS AND TRANSPORTATION COMMISSION
105 WEST CAPITOL
JEFFERSON CITY, MO 65102
1-888-ASK-MODOT (1-888-275-6636)

LOCHNER
16105 W. 113th Street | Suite 107 | Lenexa, KS 66219
Certificate of Authority #F00727076

REV.

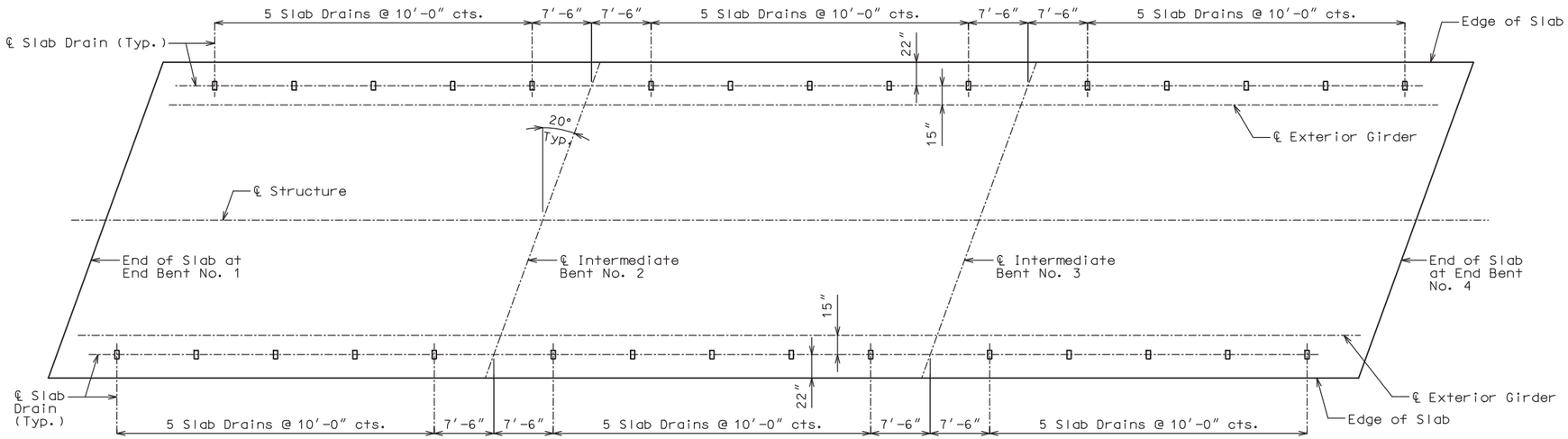

PLAN OF SLAB SHOWING SLAB DRAIN LOCATIONS

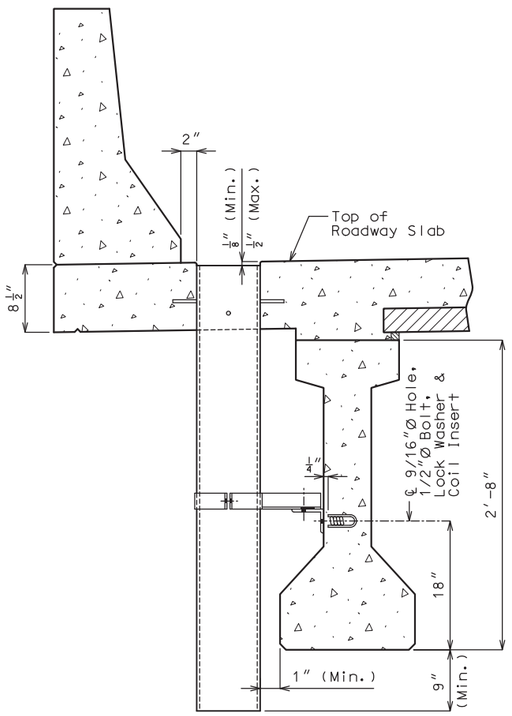

PART SECTION NEAR DRAIN

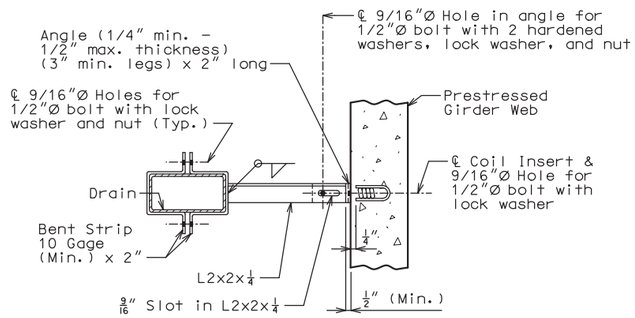

PART SECTION SHOWING BRACKET ASSEMBLY

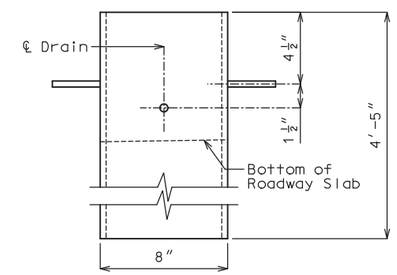

ELEVATION OF DRAIN

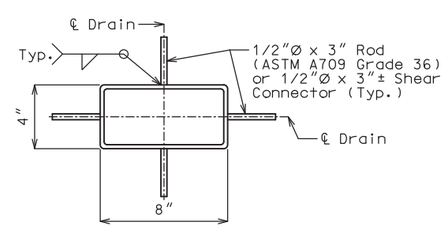

PLAN OF STEEL DRAIN OPTION

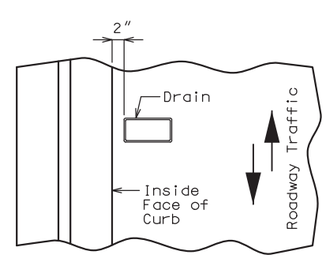

PART PLAN OF SLAB AT DRAIN

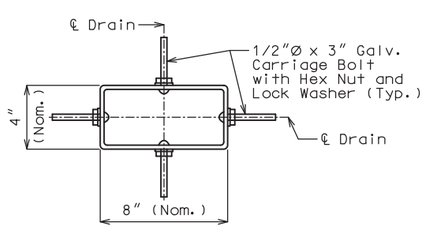

PLAN OF FRP DRAIN OPTION

General Notes:

Contractor shall have the option to construct either steel or FRP slab drains. All drains shall be of same type.

Slab drain bracket assembly shall be ASTM A709 Grade 36 steel.

Locate drains in slab by dimensions shown in Part Section Near Drain.

Reinforcing steel shall be shifted to clear drains.

The coil inserts and bracket assembly shall be galvanized in accordance with ASTM A123.

All bolts, hardened washers, lock washers and nuts shall be galvanized in accordance with ASTM A153.

Shop drawings will not be required for the slab drains and the bracket assembly.

The coil insert required for the bracket assembly attachment shall be located on the prestressed girder shop drawings.

Coil inserts shall have a concrete pull-out strength (ultimate load) of at least 2,500 pounds in 5,000 psi concrete.

The bolt required to attach the slab drain bracket assembly to the prestressed girder web shall be supplied by the prestressed girder fabricator.

Notes for Steel Drain:

Slab drains may be fabricated of either 1/4" welded sheets of ASTM A709 Grade 36 steel or from 1/4" structural steel tubing ASTM A500 or A501.

Outside dimensions of drains are 8" x 4".

The drains shall be galvanized in accordance with ASTM A123.

Notes for FRP Drain:

Drains shall be machine filament-wound thermosetting resin tubing meeting the requirements of ASTM D2996 with the following exceptions:

Shape of drains shall be rectangular with outside nominal dimensions of 8" x 4".

Minimum reinforced wall thickness shall be 1/4 inch.

The resin used shall be ultraviolet (UV) resistant and/or have UV inhibitors mixed throughout. Drains may have an exterior coating for additional UV resistance.

The color of the slab drain shall be gray (Federal Standard 26373). The color shall be uniform throughout the resin and any coating used.

The combination of materials used in the manufacture of the drains shall be tested for UV resistance in accordance with ASTM D4329 Cycle A. The representative material shall withstand at least 500 hours of testing with only minor discoloration and without any physical deterioration. The contractor shall furnish the results of the required ultraviolet testing prior to acceptance of the slab drains.

At the contractor's option, drains may be field cut. The method of cutting FRP slab drain shall be as recommended by the manufacturer to ensure a smooth, chip free cut.

STATE OF MISSOURI
KEITH LAWRENCE WETTER
NUMBER E-25019
REGISTERED PROFESSIONAL ENGINEER

THIS SHEET HAS BEEN SIGNED, SEALED AND DATED ELECTRONICALLY

DATE PREPARED	
7/2/2020	
ROUTE	STATE
J	MO
DISTRICT	SHEET NO.
BR	14
COUNTY	
GASCONADE	
JOB NO.	
J5S3176	
CONTRACT ID.	
PROJECT NO.	
BRIDGE NO.	
A8880	

DESCRIPTION	DATE

MISSOURI HIGHWAYS AND TRANSPORTATION COMMISSION
105 WEST CAPITOL
JEFFERSON CITY, MO 65102
1-888-ASK-MODOT (1-888-275-6636)

LOCHNER
16105 W. 113th Street | Suite 107 | Lenexa, KS 66219
Certificate of Authority #F00727076

DESIGNED BY:	KLW	5/2020
DETAILED BY:	JTC	5/2020
CHECKED BY:	JCG	5/2020

Note: This drawing is not to scale. Follow dimensions.

SLAB DRAIN DETAILS

REV.

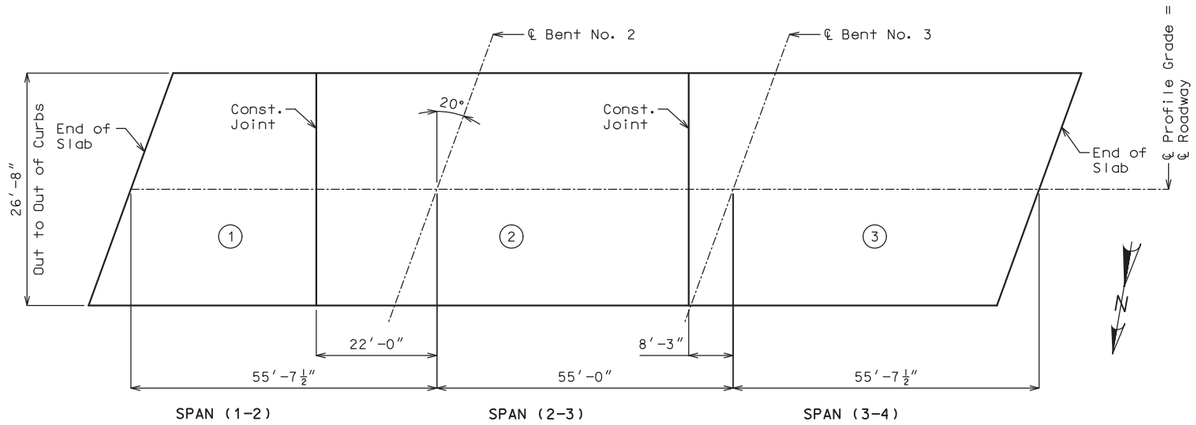

PLAN OF POURING SEQUENCE

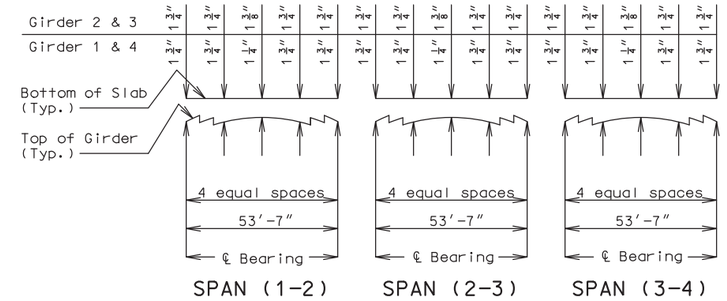

THEORETICAL SLAB HAUNCHING DIAGRAM

	Sequence of Pours			Min. Rate of Pour Cu. Yds./Hr.
	Direction			With Retarder
Basic Sequence	1	2	3	25
	End to 2	1 to 3	2 to End	
Alternate pours to the basic sequence are subject to the approval of the engineer in accordance with Sec 703.				
Alternate A Pours	1 + 2		3	25
	End to 3		2 to End	
Alternate B Pours	1 + 2 + 3			25
	End to End			

The contractor shall furnish an approved retarder to retard the set of the concrete to 2.5 hours, and shall pour and satisfactorily finish the slab pours at the rate given.

The concrete diaphragm at the intermediate bents and integral end bents shall be poured a minimum of 30 minutes and a maximum of 2 hours before the slab is poured.

SLAB POURING SEQUENCE

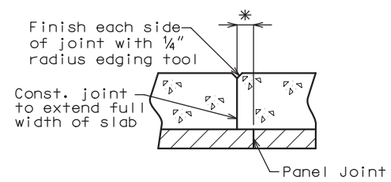

SLAB ON PANELS

✱ Adjust the construction joint to a clearance of 6 inches minimum from the panel joint.

Theoretical Bottom Of Slab Elevations At ℄ Of Girder (Prior To Forming For Slab)(Estimated at 90 days)

Girder Number	Span (1-2)				
	℄ Brg.	.25	.50	.75	℄ Brg.
1	535.90	535.94	535.95	535.92	535.86
2	536.04	536.08	536.09	536.06	536.00
3	536.05	536.08	536.09	536.06	536.00
4	535.91	535.95	535.95	535.92	535.86
	Span (2-3)				
	℄ Brg.	.25	.50	.75	℄ Brg.
1	535.86	535.89	535.90	535.87	535.81
2	535.99	536.03	536.04	536.01	535.95
3	536.00	536.03	536.04	536.01	535.95
4	535.86	535.90	535.90	535.87	535.82
	Span (3-4)				
	℄ Brg.	.25	.50	.75	℄ Brg.
1	535.81	535.84	535.85	535.82	535.76
2	535.95	535.98	535.99	535.96	535.90
3	535.95	535.99	535.99	535.96	535.90
4	535.81	535.85	535.86	535.83	535.77

Elevations are based on a constant slab thickness of 8½″ and include allowance for theoretical dead load deflections due to weight of slab (including precast panel) and barrier.

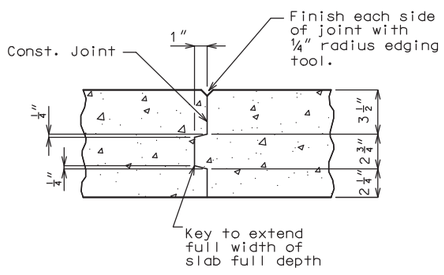

FULL DEPTH SLAB
SLAB CONSTRUCTION
JOINT DETAILS

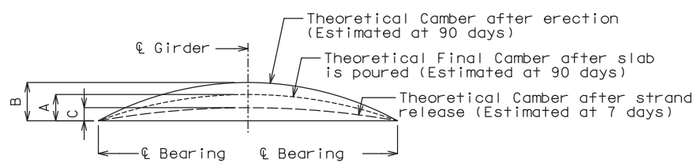

Girder	Span (1-2), (2-3) & (3-4)		
	A	B	C
Exterior	1½″	2¼″	1¼″
Interior	1½″		

GIRDER CAMBER DIAGRAM

Conversion Factors for Girder Camber (Estimated at 90 days):
0.25 pt. = 0.7125 x 0.5 pt.

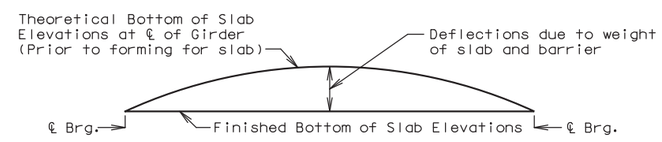

TYPICAL SLAB ELEVATIONS DIAGRAM

Notes:

If Girder camber is different from that shown in the camber diagram, in order to maintain minimum slab thickness, adjustment of the slab haunches, an increase in slab thickness or a raise in grade uniformly throughout the structure shall be necessary. No payment will be made for additional labor or materials required for variation in haunching, slab thickness or grade adjustment.

Concrete in the slab haunches is included in the Estimated Quantities for Slab on Concrete I-Girder.

For plan of slab showing reinforcement, see Sheet No. 16.

For details and reinforcement of barriers not shown, see Sheets No. 17 & 18.

SLAB HAUNCH AND POURING SEQUENCE

DESIGNED BY:	JCG	5/2020
DETAILED BY:	JTC	5/2020
CHECKED BY:	DMA	5/2020

Note: This drawing is not to scale. Follow dimensions.

STATE OF MISSOURI
KEITH LAWRENCE WETTER
NUMBER E-25019
REGISTERED PROFESSIONAL ENGINEER

THIS SHEET HAS BEEN SIGNED, SEALED AND DATED ELECTRONICALLY

DATE PREPARED 7/2/2020

ROUTE	STATE
J	MO
DISTRICT	SHEET NO.
BR	15

COUNTY: GASCONADE
JOB NO. J5S3176
CONTRACT ID.
PROJECT NO.
BRIDGE NO. A8880

DESCRIPTION | DATE

MISSOURI HIGHWAYS AND TRANSPORTATION COMMISSION
105 WEST CAPITOL
JEFFERSON CITY, MO 65102
1-888-ASK-MODOT (1-888-275-6636)

LOCHNER
16105 W. 113th Street | Suite 107 | Lenexa, KS 66219
Certificate of Authority #F00727076

REV.

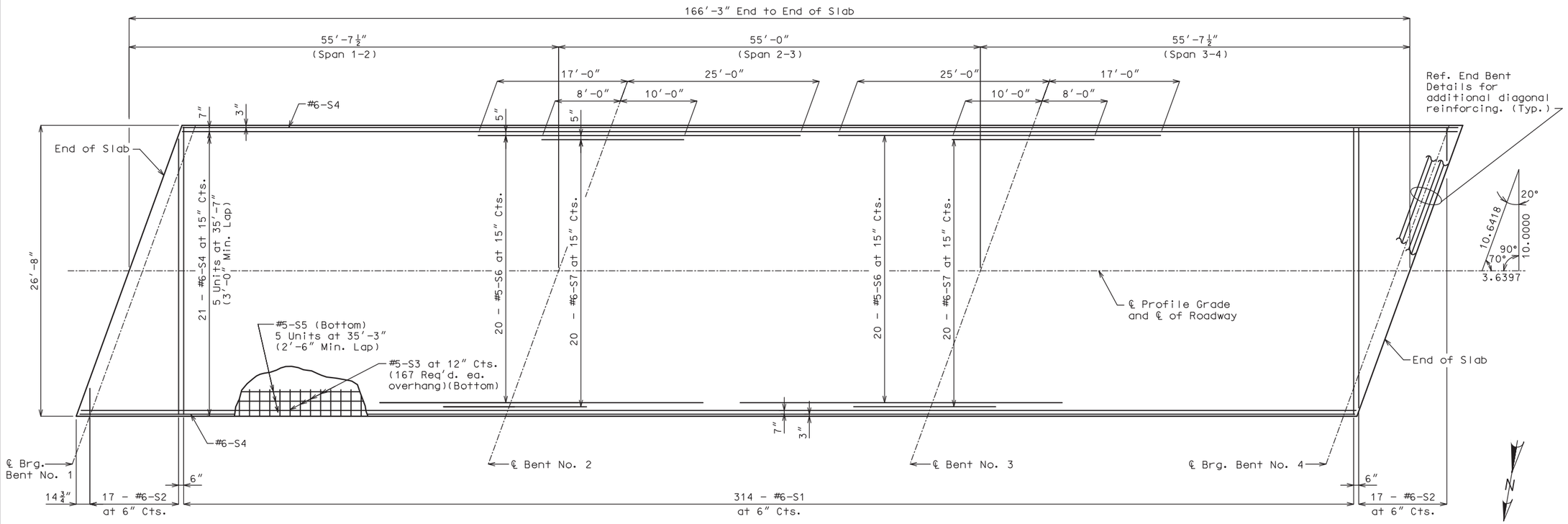

SLAB PLAN
(Top Reinforcement, except as shown)

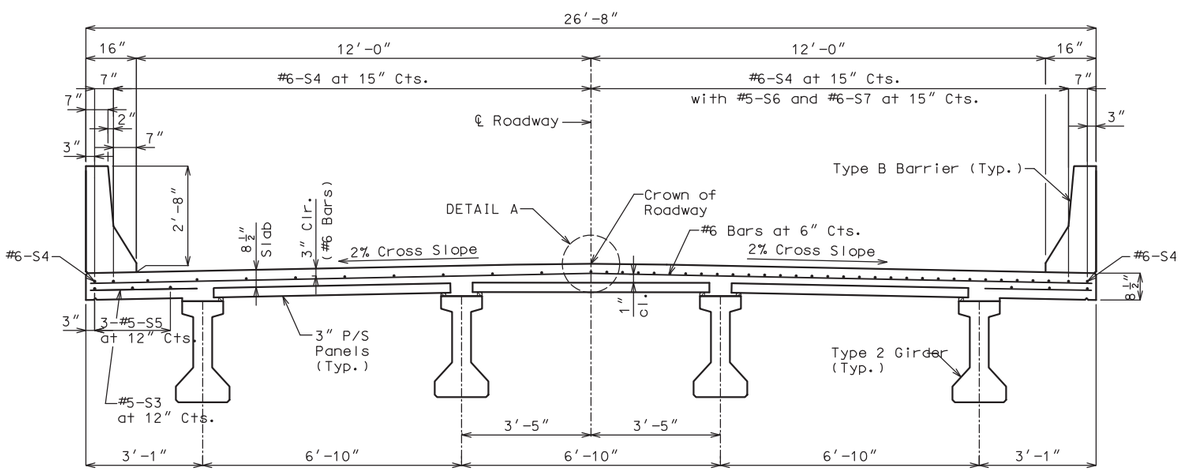

HALF SECTION NEAR MIDSPAN HALF SECTION NEAR INTERMEDIATE BENT

TYPICAL SECTION

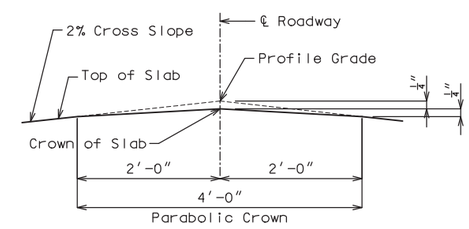

DETAIL A

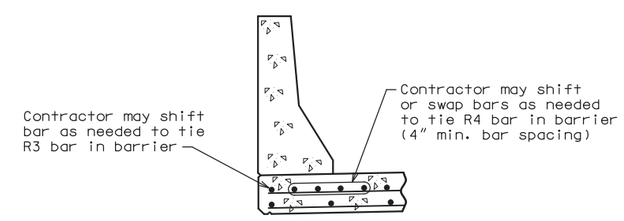

OPTIONAL SHIFTING TOP BARS AT BARRIER

DESIGNED BY:	JCG	5/2020
DETAILED BY:	RCL	5/2020
CHECKED BY:	DMA	5/2020

Note: This drawing is not to scale. Follow dimensions.

Sheet No. 16 of 25

STATE OF MISSOURI
KEITH LAWRENCE WETTER
NUMBER E-25019
REGISTERED PROFESSIONAL ENGINEER

THIS SHEET HAS BEEN SIGNED, SEALED AND DATED ELECTRONICALLY

DATE PREPARED 7/2/2020

ROUTE	STATE
J	MO
DISTRICT	SHEET NO.
BR	16

COUNTY GASCONADE

JOB NO. J5S3176

CONTRACT ID.

PROJECT NO.

BRIDGE NO. A8880

DESCRIPTION

DATE

MISSOURI HIGHWAYS AND TRANSPORTATION COMMISSION
105 WEST CAPITOL
JEFFERSON CITY, MO 65102
1-888-ASK-MODOT (1-888-275-6636)

LOCHNER
16105 W. 113th Street | Suite 107 | Lenexa, KS 66219
Certificate of Authority #F00727076

REV.

B_A8880_016_J5S3176_SLAB PLAN.dgn 11:06:41 AM 7/2/2020

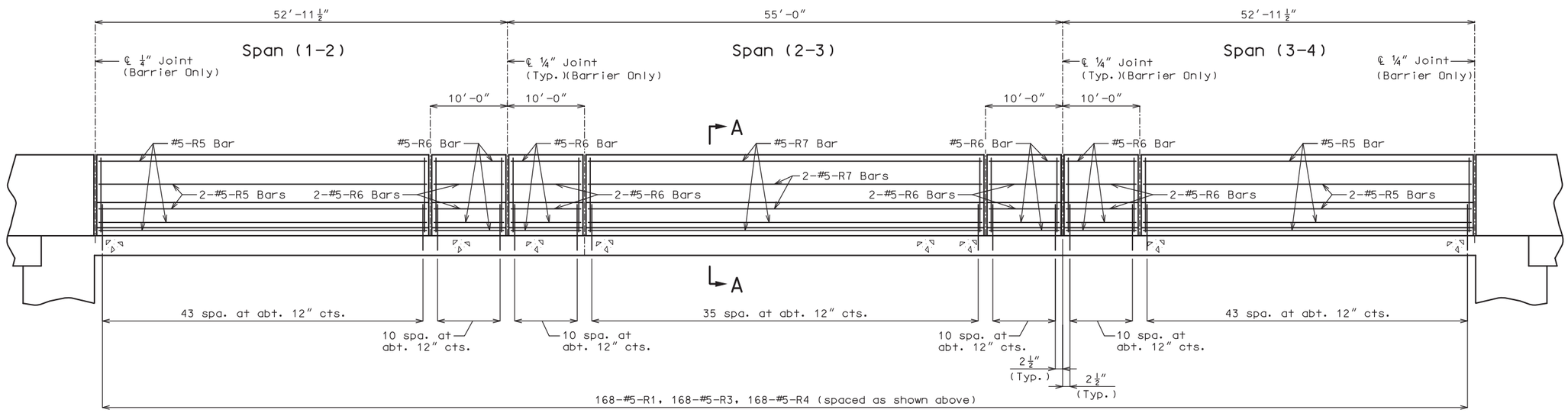

ELEVATION OF BARRIER

(Left barrier curb shown, right barrier curb similar)

Longitudinal dimensions are horizontal.

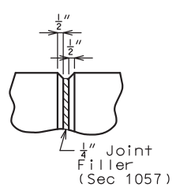

PART ELEVATION AT FORMED JOINT

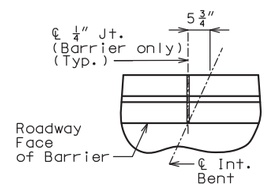

PART PLAN SHOWING JOINT LOCATION

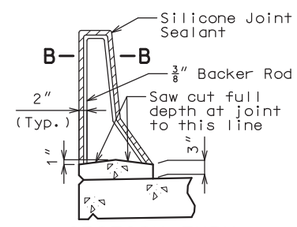

SECTION THRU SAW CUT JOINT

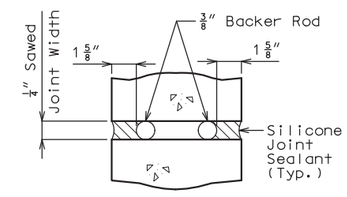

SECTION B-B

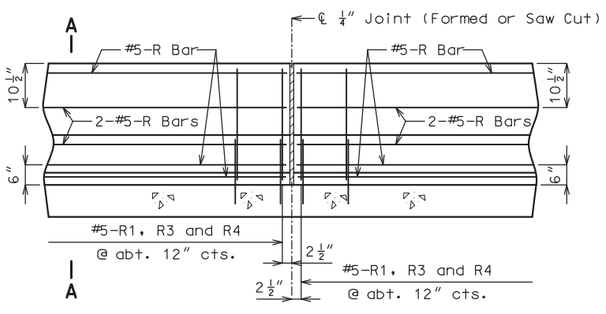

PART ELEVATION OF SAFETY BARRIER CURB

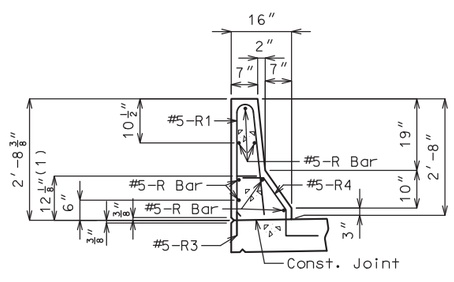

SECTION A-A

Use a minimum lap of 3′-1″ for #5 horizontal safety barrier curb bars.

The cross-sectional area above the slab = 2.27 sq. ft.

(1) To top of bar.

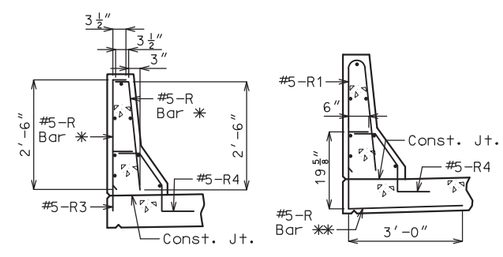

R-BAR PERMISSIBLE ALTERNATE SHAPE

✱ The R1 bar may be separated into two bars as shown, at the contractor's option, only when slip forming is not used. (All dimensions are out to out.)

✱✱ The R3 bar and #5 bottom transverse slab bar in cantilever (P/S panels only) combination may be furnished as one bar as shown, at the contractor's option.

General Notes

Conventional forming or slip forming may be used. Saw Cut Joints may be used with conventional forming. For additional details and reinforcing for slip formed option, see Sheet No. 19.

Top of barrier shall be built parallel to grade with barrier joints (except at end bents) normal to grade.

All exposed edges of barrier shall have either a 1/2-inch radius or a 3/8-inch bevel, unless otherwise noted.

Payment for all concrete and reinforcement, complete in place, will be considered completely covered by the contract unit price for Type B Barrier per linear foot.

Concrete in the barrier shall be Class B-1.

Measurement of barrier is to the nearest linear foot for each structure, measured along the outside top of slab from end of wing to end of wing.

Concrete traffic barrier delineators shall be placed on top of the barrier as shown on Missouri Standard Plans 617.10 and in accordance with Sec 617. Delineators on bridges with two-lane, two-way traffic shall have retroreflective sheeting on both sides. Concrete traffic barrier delineators will be considered completely covered by the contract unit price for Type B Barrier.

Joint sealant and backer rods shall be in accordance with Sec 717 for silicone joint sealant for saw cut and formed joints.

CONVENTIONAL-FORMED TYPE B BARRIER

DESIGNED BY:	DMA	5/2020
DETAILED BY:	JTC	5/2020
CHECKED BY:	KLW	5/2020

Note: This drawing is not to scale. Follow dimensions.

STATE OF MISSOURI
KEITH LAWRENCE WETTER
NUMBER E-25019
REGISTERED PROFESSIONAL ENGINEER

THIS SHEET HAS BEEN SIGNED, SEALED AND DATED ELECTRONICALLY

DATE PREPARED	
7/2/2020	
ROUTE: J	STATE: MO
DISTRICT: BR	SHEET NO.: 17
COUNTY: GASCONADE	
JOB NO.: J5S3176	
CONTRACT ID.	
PROJECT NO.	
BRIDGE NO.: A8880	

DESCRIPTION	DATE

MISSOURI HIGHWAYS AND TRANSPORTATION COMMISSION
105 WEST CAPITOL
JEFFERSON CITY, MO 65102
1-888-ASK-MODOT (1-888-275-6636)

LOCHNER
16105 W. 113th Street | Suite 107 | Lenexa, KS 66219
Certificate of Authority #F00727076

REV.

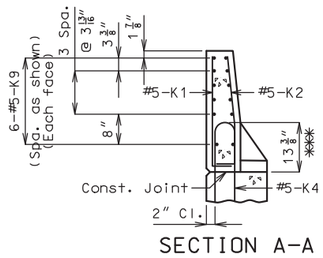

SECTION A-A

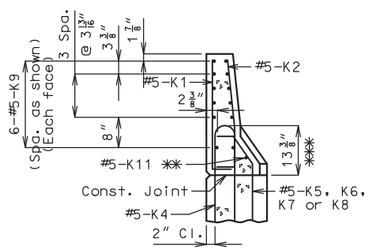

SECTION B-B

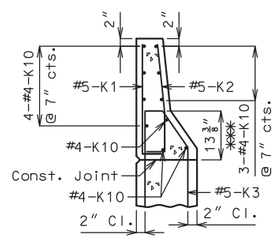

SECTION C-C

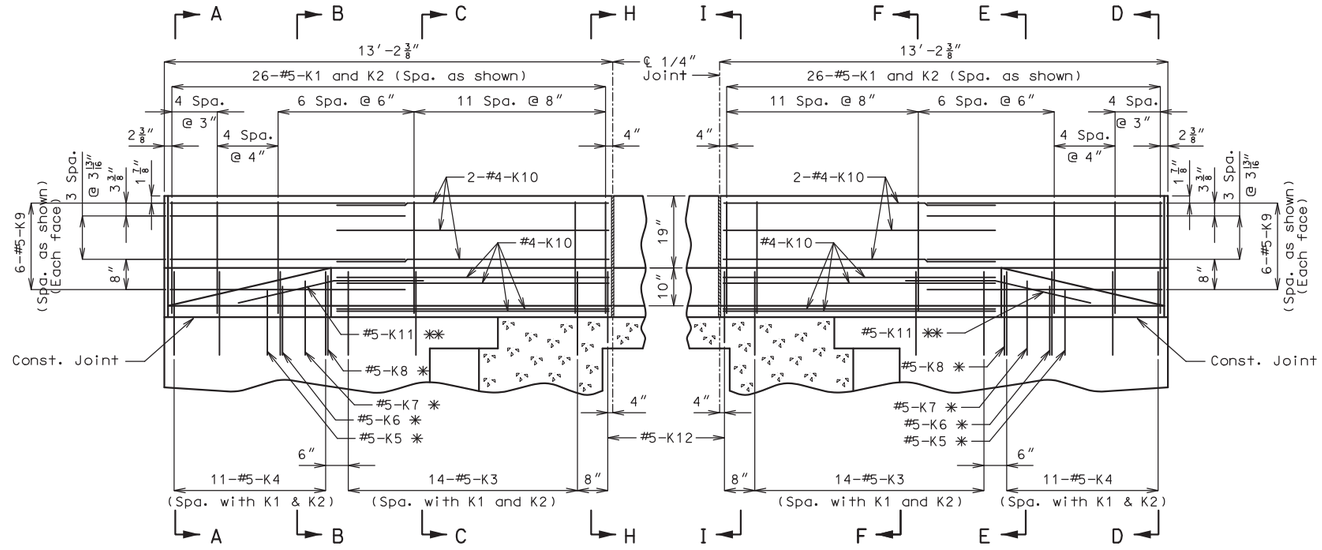

ELEVATION ELEVATION

✱ Spaced with #5-K4 bars and embed 27" into end bent.

✱✱ Fit bar to follow transition face of barrier.

✱✱✱ To top of bar.

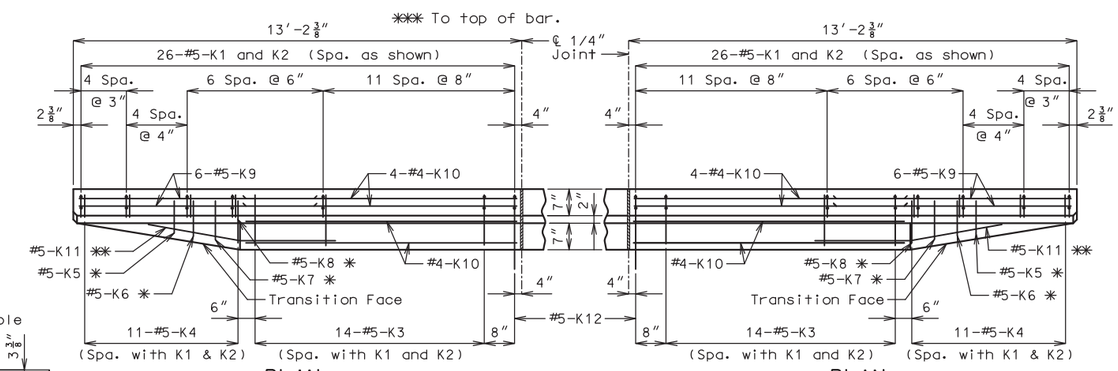

PLAN PLAN

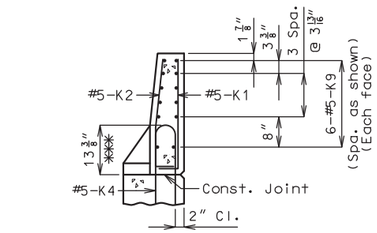

SECTION D-D

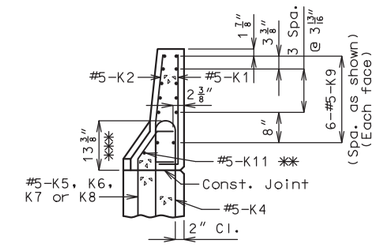

SECTION E-E

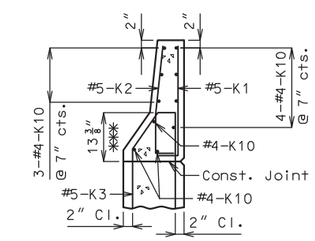

SECTION F-F

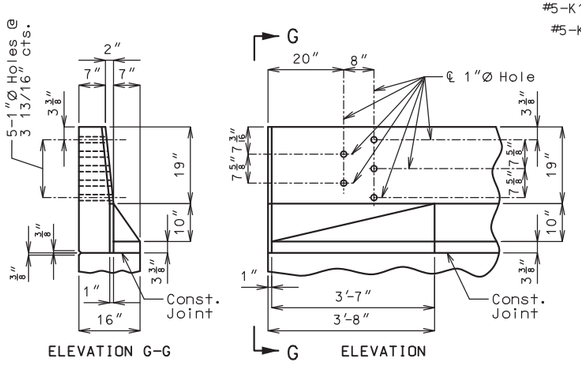

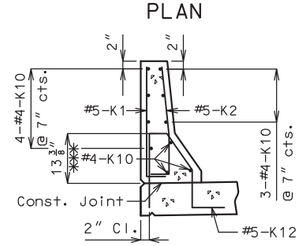

SECTION H-H

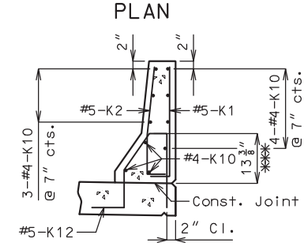

SECTION I-I

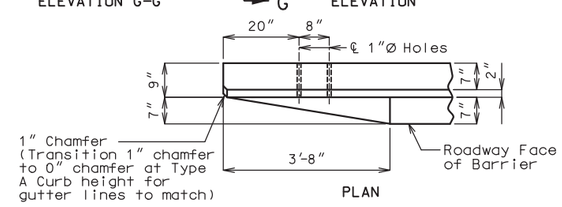

DETAILS OF GUARD RAIL ATTACHMENT

General Notes:

Concrete traffic barrier delineators shall be placed on top of the barrier as shown on Missouri Standard Plans 617.10 and in accordance with Sec 617. Delineators on bridges with two-lane, two way traffic shall have retroreflective sheeting on both sides. Concrete traffic barrier delineators will be considered completely covered by the contract unit price for Type B Barrier.

Reinforcing Steel:

Minimum clearance to reinforcing steel shall be 1 1/2" except as shown for bars embedded into end bent.

Use a minimum lap of 2'-7" between K9 and K10 bars.

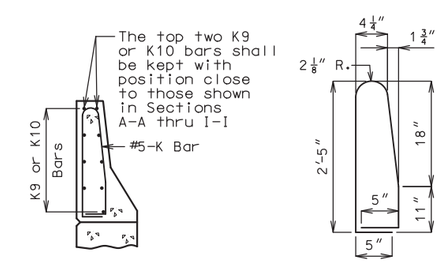

K1-K2 BAR PERMISSIBLE ALTERNATE SHAPE

(K3 or K4 thru K8 bars not shown for clarity)

The K1 and K2 bar combination may be furnished as one bar as shown, at the contractor's option.

CONVENTIONAL-FORMED TYPE B BARRIER AT END BENTS

(Left barrier curb shown, right barrier curb similar)

DESIGNED BY:	DMA	5/2020
DETAILED BY:	JTC	5/2020
CHECKED BY:	KLW	5/2020

Note: This drawing is not to scale. Follow dimensions.

STATE OF MISSOURI
KEITH LAWRENCE WETTER
NUMBER E-25019
REGISTERED PROFESSIONAL ENGINEER

THIS SHEET HAS BEEN SIGNED, SEALED AND DATED ELECTRONICALLY

DATE PREPARED 7/2/2020

ROUTE	STATE
J	MO
DISTRICT	SHEET NO.
BR	18

COUNTY: GASCONADE

JOB NO. J5S3176

CONTRACT ID.

PROJECT NO.

BRIDGE NO. A8880

DESCRIPTION	DATE

MISSOURI HIGHWAYS AND TRANSPORTATION COMMISSION
105 WEST CAPITOL
JEFFERSON CITY, MO 65102
1-888-ASK-MODOT (1-888-275-6636)

LOCHNER
16105 W. 113th Street | Suite 107 | Lenexa, KS 66219
Certificate of Authority #F00727076

REV.

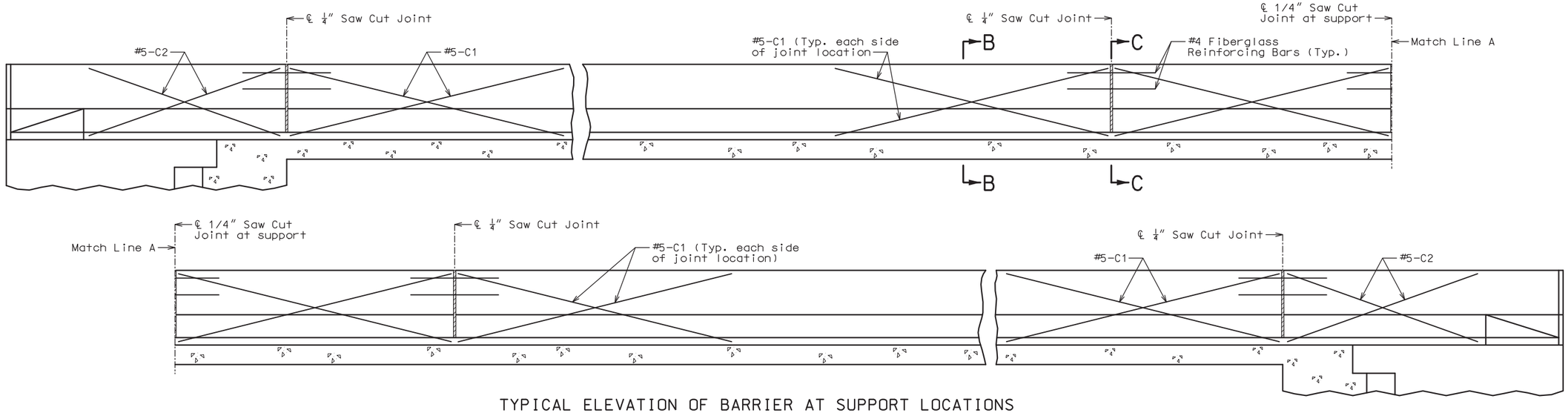

TYPICAL ELEVATION OF BARRIER AT SUPPORT LOCATIONS

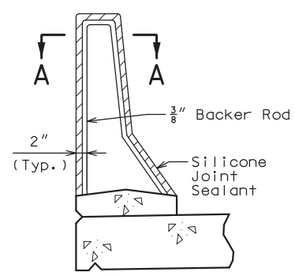

SECTION THRU SAW CUT JOINT

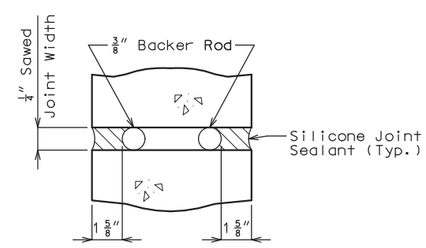

SECTION A-A

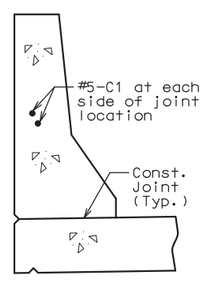

SECTION B-B

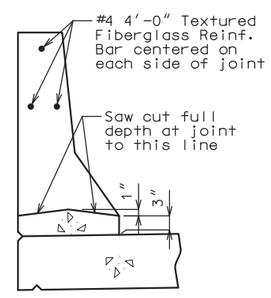

SECTION C-C

OPTIONAL SLIP-FORMED TYPE B BARRIER

Use R bars and K bars similarly as shown for conventional-formed barrier.

General Notes:

Top of barrier shall be built parallel to grade with barrier joints (except at end bents) normal to grade.

All exposed edges of barrier shall have either a 1/2-inch radius or a 3/8-inch bevel, unless otherwise noted.

Payment for all concrete and reinforcement, complete in place, will be considered completely covered by the contract unit price for Type B Barrier per linear foot.

Concrete in the barrier shall be Class B-1.

Measurement of barrier is to the nearest linear foot for each structure, measured along the outside top of slab from end of wing to end of wing.

Concrete traffic barrier delineators shall be placed on top of the barrier as shown on Missouri Standard Plans 617.10 and in accordance with Sec 617. Delineators on bridges with two-lane, two-way traffic shall have retroreflective sheeting on both sides. Concrete traffic barrier delineators will be considered completely covered by the contract unit price for Type B Barrier.

Joint sealant and backer rods shall be in accordance with Sec 717 for silicone joint sealant for saw cut and formed joints.

For slip-formed option, sides of the barrier shall have a vertically broomed finish and the top shall have a transversely broomed finish.

DESIGNED BY:	DMA	5/2020
DETAILED BY:	JTC	5/2020
CHECKED BY:	KLW	5/2020

Note: This drawing is not to scale. Follow dimensions.

STATE OF MISSOURI
KEITH LAWRENCE WETTER
NUMBER E-25019
REGISTERED PROFESSIONAL ENGINEER

THIS SHEET HAS BEEN SIGNED, SEALED AND DATED ELECTRONICALLY

DATE PREPARED	
7/2/2020	
ROUTE: J	STATE: MO
DISTRICT: BR	SHEET NO.: 19
COUNTY: GASCONADE	
JOB NO.: J5S3176	
CONTRACT ID.	
PROJECT NO.	
BRIDGE NO.: A8880	

DESCRIPTION

DATE

MISSOURI HIGHWAYS AND TRANSPORTATION COMMISSION
105 WEST CAPITOL
JEFFERSON CITY, MO 65102
1-888-ASK-MODOT (1-888-275-6636)

LOCHNER
16105 W. 113th Street | Suite 107 | Lenexa, KS 66219
Certificate of Authority #F00727076

REV.

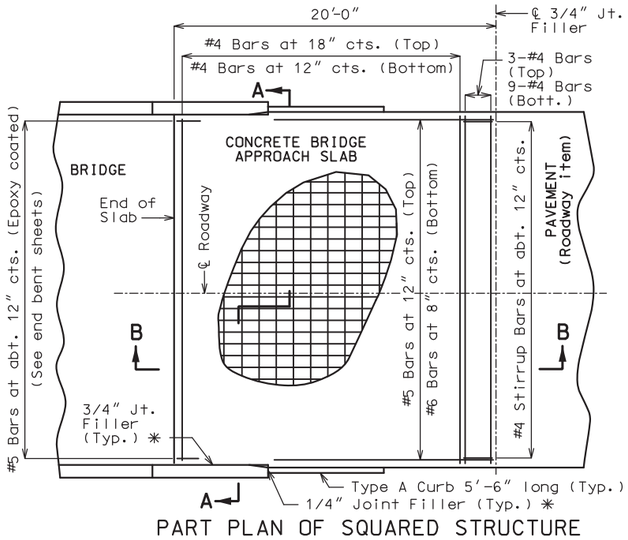

PART PLAN OF SQUARED STRUCTURE

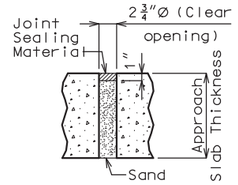

UNDERSEAL ACCESS HOLE DETAIL

(If required)

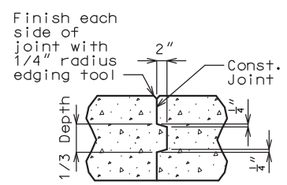

CONSTRUCTION JOINT DETAIL

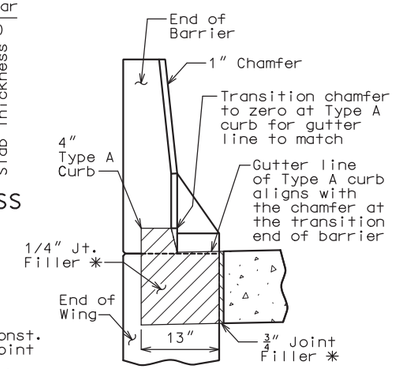

SECTION BETWEEN BARRIER AND CURB

Notes For Concrete Slab Only:

All concrete for the bridge approach slab shall be in accordance with Sec 503 (f'c = 4,000 psi).

The reinforcing steel in the bridge approach slab shall be epoxy coated Grade 60 with fy = 60,000 psi.

Longitudinal construction joints in bridge approach slab shall be aligned with longitudinal construction joints in bridge slab.

Minimum clearance to reinforcing steel shall be 1 1/2", unless otherwise shown.

The reinforcing steel in the bridge approach slab shall be continuous. The transverse reinforcing steel may be made continuous by lap splicing the #4 bars 29" or by mechanical bar splice.

All joint filler shall be in accordance with Sec 1057 for preformed fiber expansion joint filler except as noted.

Payment for furnishing all materials, labor and excavation necessary to construct the concrete bridge approach slab, including the timber header, underdrain, Type 5 aggregate base, joint filler, and all other appurtenances and incidental work as shown on this sheet, complete in place, will be considered completely covered by the contract unit price for Bridge Approach Slab (Minor Road) per square yard.

See Missouri Standard Plan 609.00 for details of Type A curb.

✳ Seal joint between vertical face of approach slab and wing with sealant in accordance with Sec 717 for silicone joint sealant for saw cut and formed joints.

General Notes:

Contractor shall have the option to construct either slab except as noted.

The contractor shall pour and satisfactorily finish the bridge slab before placing the bridge approach slab.

Drain pipe may be either 6" diameter corrugated metallic-coated pipe underdrain, 4" diameter corrugated polyvinyl chloride (PVC) drain pipe, or 4" diameter corrugated polyethylene (PE) drain pipe.

MoDOT Construction personnel will indicate the bridge approach slab used for this structure:

☐ Concrete Bridge Approach Slab
☐ Asphalt Bridge Approach Slab

Notes For Asphalt Slab Only:

Payment for furnishing all materials, labor and excavation necessary to construct the asphalt bridge approach slab, including tack, curb, underdrain and Type 5 aggregate base within the pay limits shown, complete in place, will be considered completely covered by the contract unit price for Bridge Approach Slab (Minor Road) per square yard.

Application of tack is required between lifts per Sec 403.

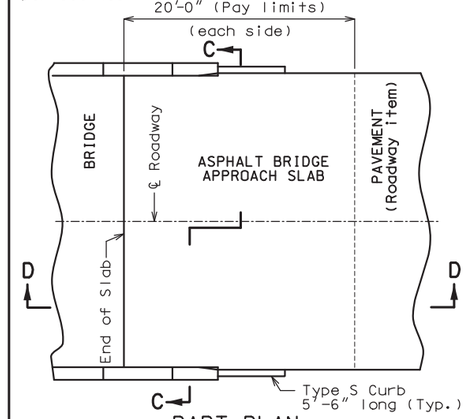

PART PLAN

(Squared structure shown, skewed structure similar)

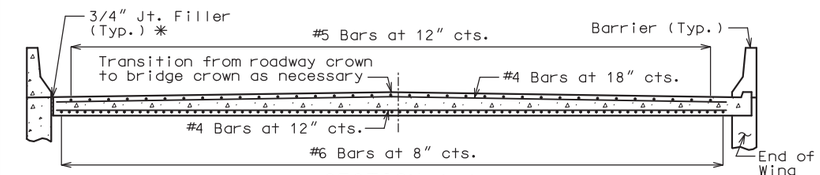

SECTION A-A

With the approval of the engineer, the contractor may crown the bottom of the approach slab to match the crown of the roadway surface.

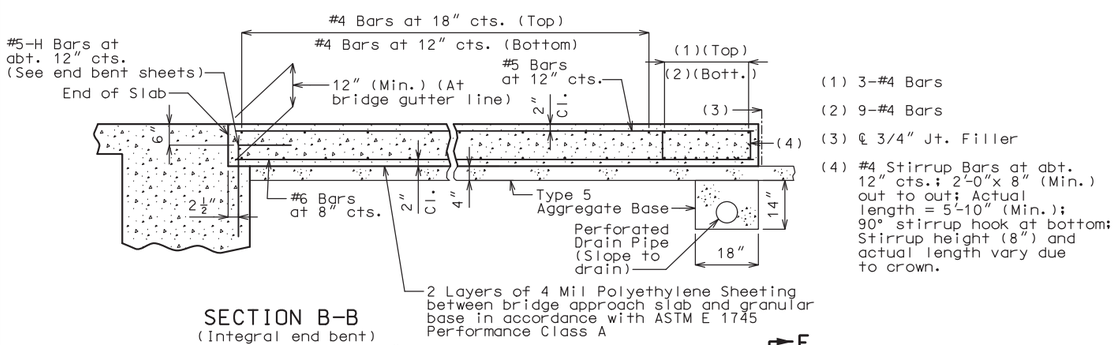

SECTION B-B

(Integral end bent)

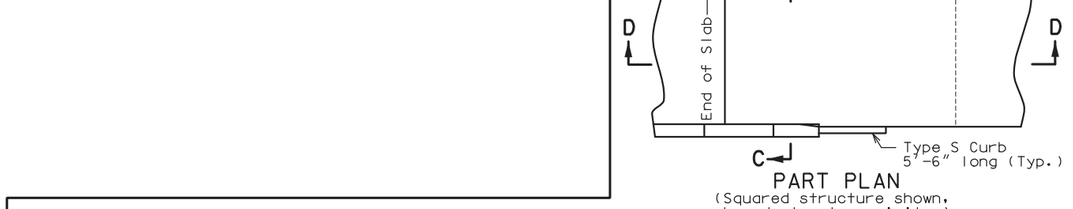

SECTION C-C

Note:
With the approval of the engineer, the contractor may crown the bottom of the approach slab to match the crown of the roadway surface.

4" TYPE S CURB

See Missouri Standard Plan 609.00 for details of Type S curb.

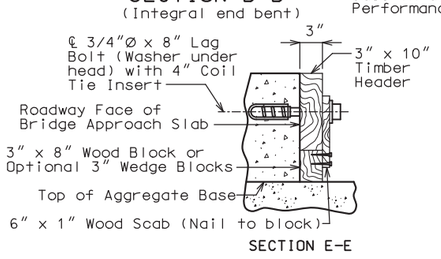

SECTION E-E

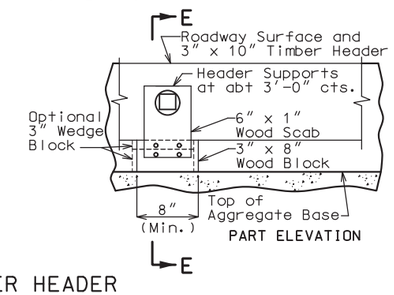

PART ELEVATION

DETAILS OF TIMBER HEADER

Remove timber header when concrete pavement is placed.

OPTIONAL CONCRETE SLAB

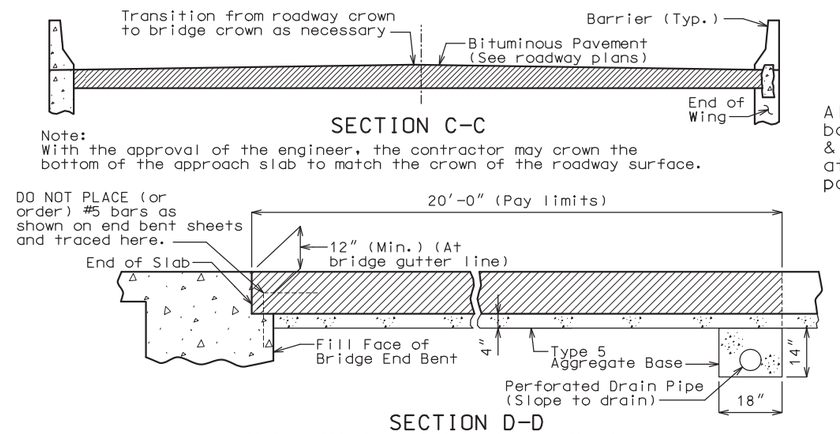

SECTION D-D

OPTIONAL ASPHALT SLAB (NOT ALLOWED WITH CONCRETE PAVEMENT)

BRIDGE APPROACH SLAB (MINOR ROAD)

DESIGNED BY:	KLW	5/2020
DETAILED BY:	JTC	5/2020
CHECKED BY:	DMA	6/2020

Note: This drawing is not to scale. Follow dimensions.

STATE OF MISSOURI
KEITH LAWRENCE WETTER
NUMBER E-25019
REGISTERED PROFESSIONAL ENGINEER

THIS SHEET HAS BEEN SIGNED, SEALED AND DATED ELECTRONICALLY

DATE PREPARED	
7/2/2020	
ROUTE: J	STATE: MO
DISTRICT: BR	SHEET NO.: 20
COUNTY: GASCONADE	
JOB NO.: J5S3176	
CONTRACT ID.	
PROJECT NO.	
BRIDGE NO.: A8880	

REV.	DATE	DESCRIPTION

MISSOURI HIGHWAYS AND TRANSPORTATION COMMISSION
105 WEST CAPITOL
JEFFERSON CITY, MO 65102
1-888-ASK-MODOT (1-888-275-6636)

LOCHNER
16105 W. 113th Street | Suite 107 | Lenexa, KS 66219
Certificate of Authority #F00727076

BILL OF REINFORCING STEEL

NO. REQ'D.	MARK NO. SIZE	MARK NO. MARK	LOCATION	EPOXY (E)	SHAPE NO.	STIRRUP (S)	SUBSTR. (X)	VARIES (V)	NO. EACH	B FT. IN.	C FT. IN.	D FT. IN.	E FT. IN.	F FT. IN.	H FT. IN.	K FT. IN.	NOMINAL LENGTH FT. IN.	ACTUAL LENGTH FT. IN.	WEIGHT LBS.
SUBSTRUCTURE																			
INTERMEDIATE BENTS																			
12	8	H21	Cap		18		X			25 9.000							27 7	27 7	884
8	6	H22	Cap		20		X			25 9.000							25 9	25 9	309
12	8	H23	Cap		20		X			25 9.000							25 9	25 9	825
4	4	P21	Shaft/Socket		35		X			2 0.000	12.000	19 6.000					142 11	140 0	374
2	4	P22	Bt 3 Column		35		X			2 3.000	12.000	10 1.000					93 2	91 6	122
2	4	P23	Bt 2 Column		35		X			2 3.000	12.000	14 1.000					121 9	119 6	160
16	4	P24	Socket Extra		16		X			2 0.000	2 9.000						6 3	6 2	66
84	5	U21	Cap		13	S	X			3 0.000	3 0.000	3 0.000	3 0.000				12 11	12 7	1102
20	5	U22	Cap		10	S	X				3 0.000	3 0.000					9 0	8 9	183
16	6	U23	Cap Ends		10	S	X				12.000	2 10.000					4 10	4 6	108
32	9	V21	Shaft/Socket		20		X			28 6.000							28 6	28 6	3101
16	9	V22	Bt 3 Column		17		X			13 5.000							14 8	14 8	798
16	9	V23	Bt 2 Column		17		X			17 5.000							18 8	18 8	1015
30	6	V24	Cap Dowel		20		X			2 6.000							2 6	2 6	113
SUPERSTRUCTURE																			
END BENTS																			
16	6	F1	Fillet	E	23					2 3.000	3 0.000	2 3.000	22.125	15.500	22.125	15.500	7 6	7 5	178
16	6	F2	Fillet	E	23					2 3.000	4 11.000	2 3.000	15.500	22.125	15.500	22.125	9 5	9 4	224
16	9	H1	Beam	E	20					28 1.000							28 1	28 1	1528
24	6	H2	Beam/Diaphragm	E	20					28 1.000							28 1	28 1	1012
24	6	H3	Diaphragm	E	20					5 5.000							5 5	5 5	195
16	6	H4	Diaphragm	E	20					2 2.000							2 2	2 2	52
72	6	H6	Wing	E	20					11 10.000							11 10	11 10	1280
32	8	H7	Wing	E	20					12 4.000							12 4	12 4	1054
8	6	H8	Diaphragm	E	14						5 0.000	2 9.000			2 7.000	11.250	7 9	7 8	92
8	6	H9	Diaphragm	E	21					2 9.000	5 0.000				2 7.000	11.250	7 9	7 5	89
8	5	H10	Strand Tie Bar	E	20					3 11.000							3 11	3 11	33
42	5	U1	Beam	E	31	S				4 5.000	2 11.000	4 5.000					12 8	12 5	544
24	5	U2	Beam	E	13	S				2 11.000	2 8.000	2 11.000	2 8.000				12 1	11 9	294
12	5	U3	Beam	E	10	S					2 8.000	2 11.000					8 3	8 0	100
50	5	U4	Diaphragm	E	31	S				3 1.000	2 4.000	3 1.000					9 5	9 2	478
50	6	U5	Diaphragm	E	19	S				2 2.000	2 10.000						5 0	4 10	363
70	6	U6	Diaphragm	E	6	S				4 9.000	3 6.000						8 3	8 1	850
52	5	U7	Diaphragm	E	19	S				2 0.000	18.000						3 6	3 5	185
16	5	V1	Beam	E	17					4 5.000							5 0	5 0	83
32	6	V2	Diaphragm	E	20					2 2.000							2 2	2 2	104
88	6	V3	Wing	E	20					6 2.500							6 2	6 2	815
INT. BENT DIAPHRAGM																			
24	6	H31	Diaphgragm	E	20					5 6.000							5 6	5 6	198
24	4	H32	Diaphgragm	E	20					6 5.000							6 5	6 5	103
16	5	H33	Diaph Tie bar	E	20					2 10.000							2 10	2 10	47
16	5	H34	Diaph Tie bar	E	20					3 11.000							3 11	3 11	65
48	4	U31	Diaphgragm	E	28	S					2 2.000	3 2.000	18.000				6 10	6 8	214
24	6	U32	Diaphgragm	E	28	S					2 4.000	3 2.000	2 2.000				7 8	7 4	264
32	5	U33	Diaphgragm	E	6	S				2 8.000	13.000						3 9	3 8	122
16	5	V31	Diaphgragm	E	20					3 2.000							3 2	3 2	53

BILL OF REINFORCING STEEL

NO. REQ'D.	MARK NO. SIZE	MARK NO. MARK	LOCATION	EPOXY (E)	SHAPE NO.	STIRRUP (S)	SUBSTR. (X)	VARIES (V)	NO. EACH	B FT. IN.	C FT. IN.	D FT. IN.	E FT. IN.	F FT. IN.	H FT. IN.	K FT. IN.	NOMINAL LENGTH FT. IN.	ACTUAL LENGTH FT. IN.	WEIGHT LBS.
SLAB																			
314	6	S1	Slab	E	20					25 5.000							25 5	25 5	11987
34	6	S2	Slab	E	20			V	2	2 10.000							2 10	2 10	706
			Incr. = 16.5 in.							24 10.000							24 10	24 10	
334	5	S3	Slab	E	20					3 0.000							3 0	3 0	1045
115	6	S4	Slab	E	20					35 10.000							35 10	35 10	6189
30	5	S5	Slab	E	20					35 3.000							35 3	35 3	1103
40	5	S6	Slab	E	20					42 0.000							42 0	42 0	1752
40	6	S7	Slab	E	20					18 0.000							18 0	18 0	1081
TYPE B BARRIER																			
168	5	R1	Barrier	E	26	S				2 6.000	4.250	2 6.125			2 6.000	3.000	5 3	5 2	905
168	5	R3	Barrier	E	19	S				17.000	6.000						23	22	321
168	5	R4	Barrier	E	27	S					6.000	11.250	7.000	12.000	9.250	6.375	3 0	2 10	496
28	5	R5	Barrier	E	20					42 8.000							42 8	42 8	1246
56	5	R6	Barrier	E	20					9 8.000							9 8	9 8	565
14	5	R7	Barrier	E	20					34 8.000							34 8	34 8	506
104	5	K1	Barrier	E	19	S				2 5.000	5.125						2 10	2 9	298
104	5	K2	Barrier	E	14	S				5.125	11.125	18.000			2.000	17.875	2 10	2 9	298
56	5	K3	Barrier	E	27	S				3 4.500	5.125	12.000	2 6.625		9.875	6.875	7 4	7 2	419
44	5	K4	Barrier	E	7	S				3 4.500	5.500						7 0	6 11	317
4	5	K5	Barrier	E	25	S				2 7.125	6.750	4.375			5.500	4.000	3 6	3 6	15
4	5	K6	Barrier	E	25	S				2 7.375	7.875	4.375			6.500	4.500	3 8	3 7	15
4	5	K7	Barrier	E	25	S				2 7.375	9.625	4.375			7.875	5.500	3 9	3 9	16
4	5	K8	Barrier	E	25	S				2 6.875	11.250	4.375			9.250	6.500	3 11	3 10	16
48	5	K9	Barrier	E	20					6 3.000							6 3	6 3	313
40	4	K10	Barrier	E	20					9 4.000							9 4	9 4	249
4	5	K11	Barrier	E	8					2 2.125					2 2.000	2.375	4 4	4 4	18
4	5	K12	Barrier	E	27	S				19.000	5.125	12.000	8.625	12.000	9.875	6.875	4 9	4 5	18
Slip-Form Option																			
40	5	C1	Barrier	E	20					10 0.000							10 0	10 0	417
8	5	C2	Barrier	E	20					9 6.000							9 6	9 6	79

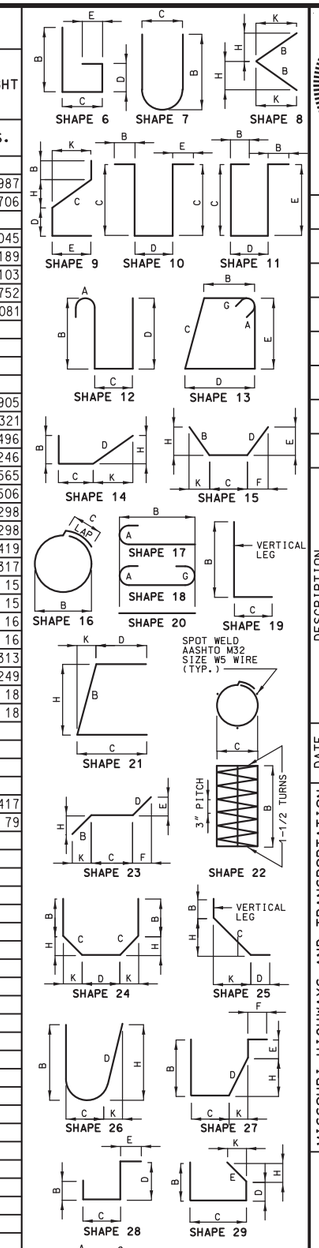

STATE OF MISSOURI
KEITH LAWRENCE WETTER
NUMBER E-25019
REGISTERED PROFESSIONAL ENGINEER

THIS SHEET HAS BEEN SIGNED, SEALED AND DATED ELECTRONICALLY

DATE PREPARED 7/2/2020

ROUTE	STATE
J	MO
DISTRICT	SHEET NO.
BR	21

COUNTY: GASCONADE
JOB NO.: J5S3176
CONTRACT ID.:
PROJECT NO.:
BRIDGE NO.: A8880

DESCRIPTION | DATE

MISSOURI HIGHWAYS AND TRANSPORTATION COMMISSION
105 WEST CAPITOL
JEFFERSON CITY, MO 65102
1-888-ASK-MODOT (1-888-275-6636)

LOCHNER
16105 W. 113th Street | Suite 107 | Lenexa, KS 66219
Certificate of Authority #F0072076

REV.

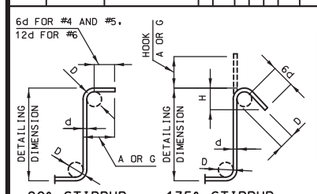

STIRRUP HOOK DIMENSIONS				
GRADES 40 - 50 - 60 KSI				
BAR SIZE	D (IN.)	90° HOOK	135° HOOK	
		HOOK A OR G	HOOK A OR G	APPROX. H
#4	2"	4 1/2"	4 1/2"	3"
#5	2 1/2"	6"	5 1/2"	3 3/4"
#6	4 1/2"	12"	8"	4 1/2"

NOTE: UNLESS OTHERWISE NOTED, DIAMETER "D" IS THE SAME FOR ALL BENDS AND HOOKS ON A BAR.

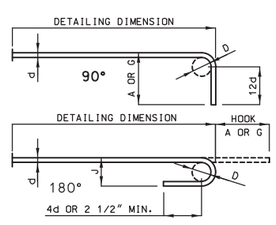

END HOOK DIMENSIONS				
BAR SIZE	D (IN.)	ALL GRADES		
		180° HOOKS		90° HOOKS
		A OR G	J	A OR G
#3	2 1/4"	5"	3"	6"
#4	3"	6"	4"	8"
#5	3 3/4"	7"	5"	10"
#6	4 1/2"	8"	6"	12"
#7	5 1/4"	10"	7"	14"
#8	6"	11"	8"	16"
#9	9 1/2"	15"	11 3/4"	19"
#10	10 3/4"	17"	13 1/4"	22"
#11	12"	19"	14 3/4"	2'-0"
#14	18 1/4"	2'-3"	21 3/4"	2'-7"

NOTE:
ALL STANDARD HOOKS AND BENDS OTHER THAN 180 DEGREE ARE TO BE BENT WITH SAME PROCEDURE AS FOR 90 DEGREE STANDARD HOOKS.
HOOKS AND BENDS SHALL BE IN ACCORDANCE WITH THE PROCEDURES AS SHOWN ON THIS SHEET.
E = EPOXY COATED REINFORCEMENT.
S = STIRRUP.
X = BAR IS INCLUDED IN SUBSTRUCTURE QUANTITIES.
V = BAR DIMENSIONS VARY IN EQUAL INCREMENTS BETWEEN DIMENSIONS SHOWN ON THIS LINE AND THE FOLLOWING LINE.
NO. EA. = NUMBER OF BARS OF EACH LENGTH.
NOMINAL LENGTHS ARE BASED ON OUT TO OUT DIMENSIONS SHOWN IN BENDING DIAGRAMS AND ARE LISTED FOR FABRICATORS USE. (NEAREST INCH)
ACTUAL LENGTHS ARE MEASURED ALONG CENTERLINE BAR TO THE NEAREST INCH.
PAYWEIGHTS ARE BASED ON ACTUAL LENGTHS.
FOUR ANGLE OR CHANNEL SPACERS ARE REQUIRED FOR EACH COLUMN SPIRAL. SPACERS ARE TO BE PLACED ON INSIDE OF SPIRALS. LENGTH AND WEIGHT OF COLUMN SPIRALS DO NOT INCLUDE SPLICES OR SPACERS.
REINFORCING STEEL (GRADE 60) FY = 60,000 PSI.

DESIGNED BY:	JTC	6/2020
DETAILED BY:	JTC	6/2020
CHECKED BY:	KLW	6/2020

Note: This drawing is not to scale. Follow dimensions.

BILL OF REINFORCING STEEL

NO. REQ'D.	MARK NO. SIZE	MARK NO. MARK	LOCATION	EPOXY (E)	SHAPE NO.	STIRRUP (S)	SUBSTR. (X)	VARIES (V)	NO. EACH	B FT.	B IN.	C FT.	C IN.	D FT.	D IN.	E FT.	E IN.	F FT.	F IN.	H FT.	H IN.	K FT.	K IN.	NOMINAL LENGTH FT.	NOMINAL LENGTH IN.	ACTUAL LENGTH FT.	ACTUAL LENGTH IN.	WEIGHT LBS.
TOTALS																												
	4																											722
	4			E																								566
	5																											1285
	5			E																								12182
	6																											530
	6			E																								25679
	8																											1709
	8			E																								1054
	9																											4914
	9			E																								1528
			TOTAL																									9160
			TOTAL (E)																									41009
SLAB ON CONC I-GIRDER																												
	4			E																								317
	5			E																								5904
	6			E																								25679
	8			E																								1054
	9			E																								1528
			TOTAL (E)																									34482
REINFORCING STEEL (BRIDGES)																												
	4																											722
	5																											1285
	6																											530
	8																											1709
	9																											4914
			TOTAL																									9160
BARRIER																												
	4			E																								249
	5			E																								5782
			TOTAL (E)																									6031
SLIPFORM OPTION																												
	5			E																								496
			TOTAL (E)																									496

BILL OF REINFORCING STEEL

NO. REQ'D.	MARK NO. SIZE	MARK NO. MARK	LOCATION	EPOXY (E)	SHAPE NO.	STIRRUP (S)	SUBSTR. (X)	VARIES (V)	NO. EACH	B FT.	B IN.	C FT.	C IN.	D FT.	D IN.	E FT.	E IN.	F FT.	F IN.	H FT.	H IN.	K FT.	K IN.	NOMINAL LENGTH FT.	NOMINAL LENGTH IN.	ACTUAL LENGTH FT.	ACTUAL LENGTH IN.	WEIGHT LBS.

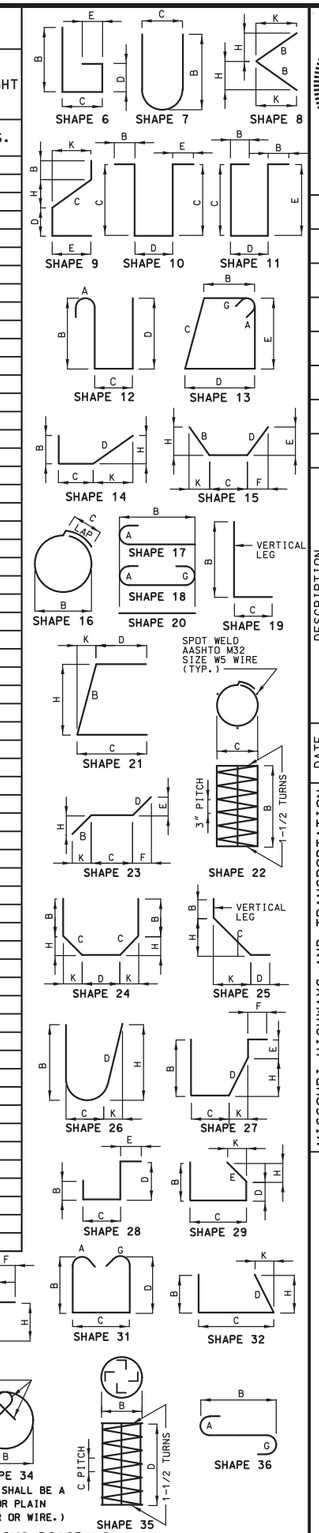

BENDING DIAGRAMS

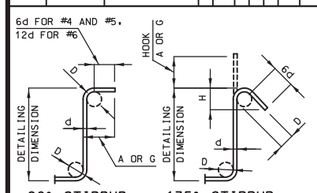

STIRRUP HOOK DIMENSIONS				
GRADES 40 - 50 - 60 KSI				
BAR SIZE	D (IN.)	90° HOOK	135° HOOK	
		HOOK A OR G	HOOK A OR G	APPROX. H
#4	2"	4 1/2"	4 1/2"	3"
#5	2 1/2"	6"	5 1/2"	3 3/4"
#6	4 1/2"	12"	8"	4 1/2"

NOTE: UNLESS OTHERWISE NOTED, DIAMETER "D" IS THE SAME FOR ALL BENDS AND HOOKS ON A BAR.

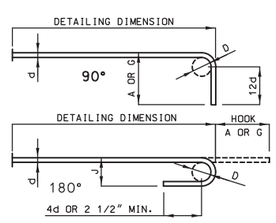

END HOOK DIMENSIONS				
BAR SIZE	D (IN.)	ALL GRADES		
		180° HOOKS		90° HOOKS
		A OR G	J	A OR G
#3	2 1/4"	5"	3"	6"
#4	3"	6"	4"	8"
#5	3 3/4"	7"	5"	10"
#6	4 1/2"	8"	6"	12"
#7	5 1/4"	10"	7"	14"
#8	6"	11"	8"	16"
#9	9 1/2"	15"	11 3/4"	19"
#10	10 3/4"	17"	13 1/4"	22"
#11	12"	19"	14 3/4"	2'-0"
#14	18 1/4"	2'-3"	21 3/4"	2'-7"

NOTE:
ALL STANDARD HOOKS AND BENDS OTHER THAN 180 DEGREE ARE TO BE BENT WITH SAME PROCEDURE AS FOR 90 DEGREE STANDARD HOOKS.
HOOKS AND BENDS SHALL BE IN ACCORDANCE WITH THE PROCEDURES AS SHOWN ON THIS SHEET.
E = EPOXY COATED REINFORCEMENT.
S = STIRRUP.
X = BAR IS INCLUDED IN SUBSTRUCTURE QUANTITIES.
V = BAR DIMENSIONS VARY IN EQUAL INCREMENTS BETWEEN DIMENSIONS SHOWN ON THIS LINE AND THE FOLLOWING LINE.
NO. EA. = NUMBER OF BARS OF EACH LENGTH.
NOMINAL LENGTHS ARE BASED ON OUT TO OUT DIMENSIONS SHOWN IN BENDING DIAGRAMS AND ARE LISTED FOR FABRICATORS USE. (NEAREST INCH)
ACTUAL LENGTHS ARE MEASURED ALONG CENTERLINE BAR TO THE NEAREST INCH.
PAYWEIGHTS ARE BASED ON ACTUAL LENGTHS.
FOUR ANGLE OR CHANNEL SPACERS ARE REQUIRED FOR EACH COLUMN SPIRAL. SPACERS ARE TO BE PLACED ON INSIDE OF SPIRALS. LENGTH AND WEIGHT OF COLUMN SPIRALS DO NOT INCLUDE SPLICES OR SPACERS.
REINFORCING STEEL (GRADE 60) FY = 60,000 PSI.

DESIGNED BY:	JTC	6/2020
DETAILED BY:	JTC	6/2020
CHECKED BY:	KLW	6/2020

Note: This drawing is not to scale. Follow dimensions.

STATE OF MISSOURI
KEITH LAWRENCE WETTER
NUMBER E-25019
REGISTERED PROFESSIONAL ENGINEER

THIS SHEET HAS BEEN SIGNED, SEALED AND DATED ELECTRONICALLY

DATE PREPARED	7/2/2020
ROUTE	J
STATE	MO
DISTRICT	BR
SHEET NO.	22
COUNTY	GASCONADE
JOB NO.	J5S3176
CONTRACT ID.	
PROJECT NO.	
BRIDGE NO.	A8880

DESCRIPTION	DATE

MISSOURI HIGHWAYS AND TRANSPORTATION COMMISSION
105 WEST CAPITOL
JEFFERSON CITY, MO 65102
1-888-ASK-MODOT (1-888-275-6636)

LOCHNER
16105 W. 113th Street | Suite 107 | Lenexa, KS 66219
Certificate of Authority #F0072076

REV.

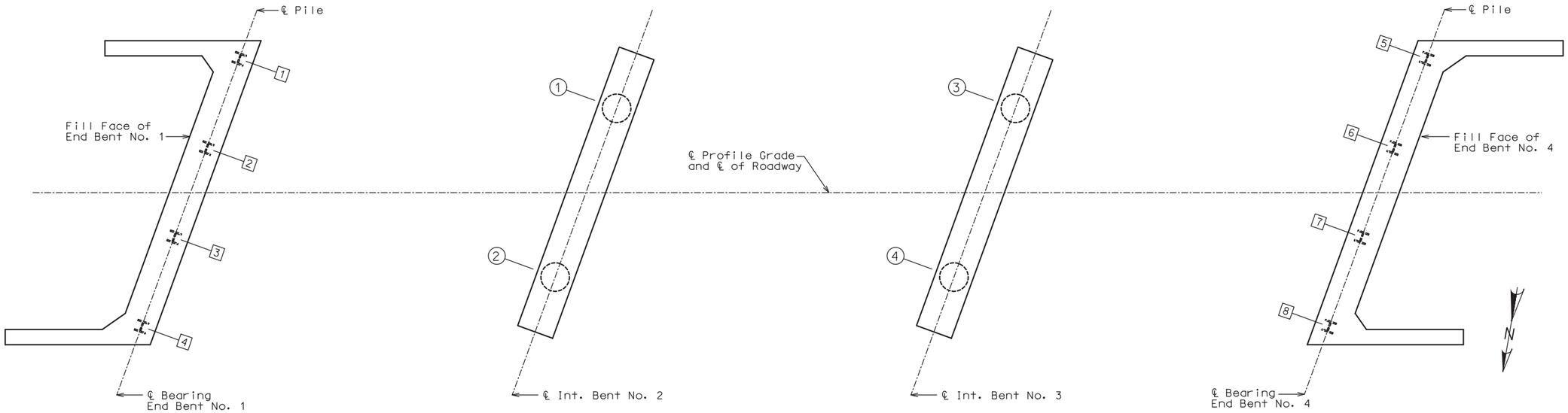

PART PLAN SHOWING PILE AND DRILLED SHAFT NUMBERING
FOR RECORDING AS-BUILT PILE AND DRILLED SHAFT DATA

LEGEND

[1] - Pile No.

(4) - Drilled Shaft No.

As-Built Pile Data

Pile No.	Length in Place (ft)	Computed Nominal Axial Compressive Resistance (kips)	Remarks
End Bent No. 1			
1			
2			
3			
4			

As-Built Drilled Shaft Data

Shaft No.	Top of Sound Rock (Elev.)	Tip of Casing (Elev.)	Bottom of Rock Socket (Elev.)	Remarks
Int. Bent No. 2				
1				
2				
Int. Bent No. 3				
3				
4				

As-Built Pile Data

Pile No.	Length in Place (ft)	Computed Nominal Axial Compressive Resistance (kips)	Remarks
End Bent No. 4			
5			
6			
7			
8			

Note:
Indicate in remarks column:
A. Pile type and grade
B. Batter
C. Driven to practical refusal

This sheet to be completed by MoDOT construction personnel.

DESIGNED BY:	KLW	5/2020
DETAILED BY:	JTC	5/2020
CHECKED BY:	DMA	6/2020

Note: This drawing is not to scale. Follow dimensions.

AS-BUILT PILE AND DRILLED SHAFT DATA

STATE OF MISSOURI
KEITH LAWRENCE WETTER
NUMBER E-25019
REGISTERED PROFESSIONAL ENGINEER

THIS SHEET HAS BEEN SIGNED, SEALED AND DATED ELECTRONICALLY

DATE PREPARED 7/2/2020

ROUTE	STATE
J	MO
DISTRICT	SHEET NO.
BR	23

COUNTY GASCONADE

JOB NO. J5S3176

CONTRACT ID.

PROJECT NO.

BRIDGE NO. A8880

DESCRIPTION	DATE

MISSOURI HIGHWAYS AND TRANSPORTATION COMMISSION
105 WEST CAPITOL
JEFFERSON CITY, MO 65102
1-888-ASK-MODOT (1-888-275-6636)

LOCHNER
16105 W. 113th Street | Suite 107 | Lenexa, KS 66219
Certificate of Authority #F00727076

REV.

Missouri Department of Transportation
Construction and Materials

BORING NO. O-20-01 (101)
Page 1 of 1

Job No.: J5S3176 **County:** Gasconade **Route:** J
Design: A8880 **Skew:** 20.0 deg LA **Location:** Hermann
Bent: 1 **Logged By:** Ricardo Todd **Operator:** Casey Williams
Station: 338+05.0 **Northing:** 1022321.1 **Date of Work:** 01/06/20-01/06/20
Offset: 20.0 L **Easting:** 529575.5 **Depth to Water:** 8.2
Elevation: 536.0 **Requested Northing:** **Depth Hole Open:** 11.1
Requested Station: **Requested Easting:** **Time Change:** 10 hours
Requested Offset: **Equipment:** Acker Soil XLS ,Split-Spoon Sampler, NQ
Requested Elevation: **Location Note:** Over First Creek
Drill No.: G-9462 **Hammer Efficiency:** 71% **Drilling Method:** Hollow Stem Auger

Depth (ft)	Description	Elevation (ft)	Sample Type	REC % (RQD %)	Blow Counts (N_{60})	Shear Data	Field Tests	Index Tests
0	0.0-1.2' Gray, GRAVELLY FAT CLAY, stiff, moist							
	1.2-10.6' Brownish gray, SILTY LEAN CLAY trace sand, very soft to stiff, moist to wet	530		67	0-0-0 (0)		PP = 0.15 tsf	MC = 26.0% γ_{sat} = 124 pcf[1] LL = 25 PL = 20
10	10.6-11.3' Gray, SILTY LEAN CLAY trace organics, stiff, wet			67	2-8-11 (22)		PP = 2.00 tsf	MC = 24.2% γ_{sat} = 126 pcf[1] LL = 22 PL = 16
	11.3-12.9' Brown, GRAVELLY SAND, medium dense, wet, fine grained	520		67	6-10-8 (21)			Sieve Analysis Sieve # % Passing 1½" 100.0 1" 93.6 3/4" 93.6 3/8" 78.3 #4 67.2 #10 54.7 #16 48.5 #40 38.6 #50 31.8 #100 19.3 #200 16.0
20	12.9-20.5' Brown, SAND scattered gravel, very loose to medium dense, wet, fine grained			67	1-1-2 (4)		PP = 0.25 tsf	
	20.5-27.8' Gray, LEAN CLAY scattered sand, soft to hard, wet	510		67	6-15-20 (41)		PP = 3.75 tsf	
30	27.8-32.5' Dolomite, highly weathered			80	10-13-43/0.3'			MC = 29.8% γ_{sat} = 121 pcf[1] LL = 25 PL = 17
	32.5-47.5' Cherty Dolomite, gray, thin bedded, medium hard to moderately hard, slightly weathered, fine grained	500		100 (20)		Qu Test Results UCS = 1190 ksf MC = 0% γ_{moist} = 160.4 pcf		
40				86 (26)		Qu Test Results UCS = 1040 ksf MC = 0% γ_{moist} = 157.2 pcf		
		490		98 (72)		Qu Test Results UCS = 519 ksf MC = 0% γ_{moist} = 154.3 pcf		
	Bottom of borehole at 47.5 feet.							

N_{60} = (Em/60)Nm N_{60} - Corrected N value for standard 60% SPT efficiency; Em - Measured hammer efficiency in percent; Nm - Observed N-value
(1) = Assumed, (2) = Actual

Coordinate System: Modified U.S. State Plane 1983 **Coordinate Zone:** Missouri East **Coordinate Proj. Factor:**
Coordinate Datum: NAD 83 (CONUS) **Coordinate Units:** U.S. Survey Feet

* Persons using this information are cautioned that the materials shown are determined by the equipment noted and accuracy of the "log of materials" is limited thereby and by judgement of the operator. THIS INFORMATION IS FOR DESIGN PURPOSES ONLY.

LETTER BOREHOLE - MODOT 20150728.GDT - 3/19/20 14:39 - Z:\SGI\GINTPROJECT FILES\J5S3176-A8880.GPJ

Missouri Department of Transportation
Construction and Materials

BORING NO. O-20-02 (202)
Page 1 of 1

Job No.: J5S3176 **County:** Gasconade **Route:** J
Design: A8880 **Skew:** 20.0 deg LA **Location:** Hermann
Bent: 2 **Logged By:** Ricardo Todd **Operator:** Casey Williams
Station: 338+60.0 **Northing:** 1022348.9 **Date of Work:** 01/07/20-01/08/20
Offset: 10.0 R **Easting:** 529537.8 **Depth to Water:** 5.2
Elevation: 523.4 **Requested Northing:** **Depth Hole Open:** 7.3
Requested Station: **Requested Easting:** **Time Change:** End of Drilling
Requested Offset: **Equipment:** Acker Soil XLS ,Split-Spoon Sampler, NQ
Requested Elevation: **Location Note:** Over First Creek
Drill No.: G-9462 **Hammer Efficiency:** 71% **Drilling Method:** Hollow Stem Auger

Depth (ft)	Description	Elevation (ft)	Sample Type	REC % (RQD %)	Blow Counts (N_{60})	Shear Data	Field Tests	Index Tests
0	0.0-4.6' BOULDERS with cobbles	520						
	4.6-10.1' Brown, SAND with gravel, medium dense, moist, coarse grained			67	1-3-8 (13)			
10	9.3' Hit Water							
	10.1-12.9' Gray, GRAVELLY SAND, very loose, wet, fine grained	510		67	4-1-1 (2)			
	12.9-21.5' Whitish gray, SAND with silt, dense, wet, fine grained			67	28-37-30 (79)			Sieve Analysis Sieve # % Passing 1½" 100.0 1" 93.5 3/4" 90.5 3/8" 76.9 #4 66.2 #10 58.0 #16 54.1 #40 46.9 #50 41.2 #100 19.8 #200 13.4
20	21.5-22.8' Dolomite, highly weathered			67	16-10-13 (27)			
	22.8-54.9' Cherty Dolomite, gray, thin bedded to medium bedded, medium hard to moderately hard, slightly weathered, fine grained, Vuggy	500		90 (0)				
30				90 (22)		Qu Test Results UCS = 1000 ksf MC = 0% γ_{moist} = 162 pcf		
		490		100 (40)		Qu Test Results UCS = 1480 ksf MC = 0% γ_{moist} = 160.6 pcf		Sieve Analysis Sieve # % Passing 1½" 100.0 1" 95.3 3/4" 88.7 3/8" 81.2 #4 68.3 #10 59.7 #16 54.3 #40 46.2 #50 42.4 #100 39.1 #200 36.0
40				100 (72)		Qu Test Results UCS = 909 ksf MC = 0% γ_{moist} = 165.5 pcf		
		480		100 (62)		Qu Test Results UCS = 869 ksf MC = 0% γ_{moist} = 160.7 pcf		
50				100 (80)		Qu Test Results UCS = 661 ksf MC = 0% γ_{moist} = 161.3 pcf		
		470		96 (72)		Qu Test Results UCS = 638 ksf MC = 0% γ_{moist} = 161 pcf		
	Bottom of borehole at 54.9 feet.							

N_{60} = (Em/60)Nm N_{60} - Corrected N value for standard 60% SPT efficiency; Em - Measured hammer efficiency in percent; Nm - Observed N-value
(1) = Assumed, (2) = Actual

Coordinate System: Modified U.S. State Plane 1983 **Coordinate Zone:** Missouri East **Coordinate Proj. Factor:**
Coordinate Datum: NAD 83 (CONUS) **Coordinate Units:** U.S. Survey Feet

* Persons using this information are cautioned that the materials shown are determined by the equipment noted and accuracy of the "log of materials" is limited thereby and by judgement of the operator. THIS INFORMATION IS FOR DESIGN PURPOSES ONLY.

LETTER BOREHOLE - MODOT 20150728.GDT - 3/19/20 14:39 - Z:\SGI\GINTPROJECT FILES\J5S3176-A8880.GPJ

BORING DATA

Note: For locations of borings, see Sheet No. 1.
Data provided by MoDOT Materials Geotechnical Section in Report dated March 23, 2020.

DESIGNED BY:	KLW	5/2020
DETAILED BY:	JTC	5/2020
CHECKED BY:	DMA	5/2020

Note: This drawing is not to scale. Follow dimensions.

STATE OF MISSOURI
KEITH LAWRENCE WETTER
NUMBER E-25019
REGISTERED PROFESSIONAL ENGINEER

THIS SHEET HAS BEEN SIGNED, SEALED AND DATED ELECTRONICALLY

DATE PREPARED 7/2/2020

ROUTE	STATE
J	MO
DISTRICT	SHEET NO.
BR	24

COUNTY: GASCONADE
JOB NO.: J5S3176
CONTRACT ID.:
PROJECT NO.:
BRIDGE NO.: A8880

DESCRIPTION | DATE

MISSOURI HIGHWAYS AND TRANSPORTATION COMMISSION
105 WEST CAPITOL
JEFFERSON CITY, MO 65102
1-888-ASK-MODOT (1-888-275-6636)

LOCHNER
16105 W. 113th Street | Suite 107 | Lenexa, KS 66219
Certificate of Authority #F0072076

REV.

B_A8880_024_J5S3176_BORING LOG_01.dgn 11:11:45 AM 7/2/2020

Missouri Department of Transportation
Construction and Materials

BORING NO. O-20-03 (302)
Page 1 of 1

Job No.: J5S3176 **County:** Gasconade **Route:** J
Design: A8880 **Skew:** 20.0 deg LA **Location:** Hermann
Bent: 3 **Logged By:** Ricardo Todd **Operator:** Casey Williams
Station: 339+15.0 **Northing:** 1022340.6 **Date of Work:** 01/08/20-01/09/20
Offset: 20.0 R **Easting:** 529474 **Depth to Water:** 3.0
Elevation: 520.3 **Requested Northing:** **Depth Hole Open:** 4.1
Requested Station: **Requested Easting:** **Time Change:** End of Driling
Requested Offset: **Equipment:** Acker Soil XLS ,Grab Sample, Split-Spoon Sampler, NQ
Requested Elevation: **Location Note:** Over First Creek
Drill No.: G-9462 **Hammer Efficiency:** 71% **Drilling Method:** Hollow Stem Auger

Depth (ft)	Graphic	Description	Elevation (ft)	Sample Type	REC % (RQD %)	Blow Counts (N_{60})	Shear Data	Field Tests	Index Tests
0		0.0-8.6' Whitish tan, SAND, loose, moist to wet, fine grained	520						
		4.7' Hit Water			67	3-2-2 (5)			Sieve Analysis Sieve # % Passing #10 100.0 #16 99.4 #40 71.4 #50 40.6 #100 9.0 #200 5.0
10		8.6-15.6' Gray, GRAVELLY SAND, dense, wet, coarse grained	510		67	12-18-14 (38)			
		15.6-15.7' Dolomite, highly weathered			133	35-43/0.3'			
20		15.7-45.7' Cherty Dolomite, gray, thin bedded to medium bedded, medium hard to moderately hard, slightly weathered, fine grained, Vuggy	500		100 (22)		Qu Test Results UCS = 1410 ksf MC = 0% γ_{moist} = 163.5 pcf		
					100 (42)		Qu Test Results UCS = 1400 ksf MC = 0% γ_{moist} = 159.2 pcf		
30			490		100 (22)		Qu Test Results UCS = 931 ksf MC = 0% γ_{moist} = 149 pcf		
					100 (80)		Qu Test Results UCS = 992 ksf MC = 0% γ_{moist} = 158.1 pcf		
40			480		100 (40)		Qu Test Results UCS = 702 ksf MC = 0% γ_{moist} = 161.1 pcf		
		Bottom of borehole at 45.7 feet.			100 (74)		Qu Test Results UCS = 404 ksf MC = 0% γ_{moist} = 161.6 pcf		

N_{60} = (Em/60)Nm N_{60} - Corrected N value for standard 60% SPT efficiency; Em - Measured hammer efficiency in percent; Nm - Observed N-value
(1) = Assumed, (2) = Actual

Coordinate System: Modified U.S. State Plane 1983 **Coordinate Zone:** Missouri East **Coordinate Proj. Factor:**
Coordinate Datum: NAD 83 (CONUS) **Coordinate Units:** U.S. Survey Feet

* Persons using this information are cautioned that the materials shown are determined by the equipment noted and accuracy of the "log of materials" is limited thereby and by judgement of the operator. THIS INFORMATION IS FOR DESIGN PURPOSES ONLY.

LETTER BOREHOLE - MODOT 20150728.GDT - 3/19/20 14:39 - Z:\SGG\GINT\PROJECT FILES\J5S3176-A8880.GPJ

Missouri Department of Transportation
Construction and Materials

BORING NO. O-20-04 (401)
Page 1 of 1

Job No.: J5S3176 **County:** Gasconade **Route:** J
Design: A8880 **Skew:** 20.0 deg LA **Location:** Hermann
Bent: 4 **Logged By:** Ricardo Todd **Operator:** Casey Williams
Station: 339+70.0 **Northing:** 1022291.2 **Date of Work:** 01/09/20-01/09/20
Offset: 20.0 L **Easting:** 529413.2 **Depth to Water:** 10.2
Elevation: 526.5 **Requested Northing:** **Depth Hole Open:** 13.7
Requested Station: **Requested Easting:** **Time Change:** End of Drilling
Requested Offset: **Equipment:** Acker Soil XLS ,Split-Spoon Sampler, NQ
Requested Elevation: **Location Note:** Over First Creek
Drill No.: G-9462 **Hammer Efficiency:** 71% **Drilling Method:** Hollow Stem Auger

Depth (ft)	Graphic	Description	Elevation (ft)	Sample Type	REC % (RQD %)	Blow Counts (N_{60})	Shear Data	Field Tests	Index Tests
0		0.0-2.1' Dark gray, LEAN CLAY trace sand, stiff, moist							
		2.1-6.1' BOULDERS with cobbles, loose	520		67	9-5-2 (8)			
10		6.1-12.1' Gray, SAND with silt, loose, moist to wet, fine grained			67	1-2-2 (5)			Sieve Analysis Sieve # % Passing 3/4" 100.0 3/8" 98.6 #4 96.5 #10 94.8 #16 92.7 #40 77.1 #50 57.7 #100 29.7 #200 26.7
		12.1-21.5' Gray, GRAVELLY SAND with silt, dense, wet, fine to coarse grained							
		15.0' Hit Water	510		67	2-12-17 (34)			
20		20.0' Sand Heave			67	17-24-8 (38)			
		21.5-31.5' Cherty Dolomite, gray, thin bedded to medium bedded, medium hard, slightly weathered, fine grained, Vuggy	500		68 (0)				Sieve Analysis Sieve # % Passing 1½" 100.0 1" 95.6 3/4" 95.6 3/8" 85.4 #4 76.4 #10 64.9 #16 57.4 #40 37.5 #50 22.2 #100 10.6 #200 8.6
30					86 (60)		Qu Test Results UCS = 1000 ksf MC = 0% γ_{moist} = 158.3 pcf		
		Bottom of borehole at 31.5 feet.							

N_{60} = (Em/60)Nm N_{60} - Corrected N value for standard 60% SPT efficiency; Em - Measured hammer efficiency in percent; Nm - Observed N-value
(1) = Assumed, (2) = Actual

Coordinate System: Modified U.S. State Plane 1983 **Coordinate Zone:** Missouri East **Coordinate Proj. Factor:**
Coordinate Datum: NAD 83 (CONUS) **Coordinate Units:** U.S. Survey Feet

* Persons using this information are cautioned that the materials shown are determined by the equipment noted and accuracy of the "log of materials" is limited thereby and by judgement of the operator. THIS INFORMATION IS FOR DESIGN PURPOSES ONLY.

LETTER BOREHOLE - MODOT 20150728.GDT - 3/19/20 14:39 - Z:\SGG\GINT\PROJECT FILES\J5S3176-A8880.GPJ

BORING DATA

Note: For locations of borings, see Sheet No. 1.
Data provided by MoDOT Materials Geotechnical Section in Report dated March 23, 2020.

DESIGNED BY:	KLW	5/2020
DETAILED BY:	JTC	5/2020
CHECKED BY:	DMA	5/2020

Note: This drawing is not to scale. Follow dimensions.

Sheet No. 25 of 25

STATE OF MISSOURI
KEITH LAWRENCE WETTER
NUMBER E-25019
REGISTERED PROFESSIONAL ENGINEER

THIS SHEET HAS BEEN SIGNED, SEALED AND DATED ELECTRONICALLY

DATE PREPARED 7/2/2020

ROUTE	STATE
J	MO
DISTRICT	SHEET NO.
BR	25

COUNTY GASCONADE
JOB NO. J5S3176
CONTRACT ID.
PROJECT NO.
BRIDGE NO. A8880

DESCRIPTION
DATE

MISSOURI HIGHWAYS AND TRANSPORTATION COMMISSION
105 WEST CAPITOL
JEFFERSON CITY, MO 65102
1-888-ASK-MODOT (1-888-275-6636)

LOCHNER
16105 W. 113th Street | Suite 107 | Lenexa, KS 66219
Certificate of Authority #F00727076

REV.

B_A8880_025_J5S3176_BORING LOG_02.dgn 11:08:42 AM 7/2/2020