MISSOURI HIGHWAYS AND TRANSPORTATION COMMISSION
PLANS FOR PROPOSED
STATE HIGHWAY
VERNON COUNTY

DESIGN DESIGNATION

FUNCTIONAL CLASSIFICATION - INTERSTATE

A.A.D.T. - 2021 = 11,164
A.A.D.T. - 2041 = 12,335
D.H.V. = 7.4%
T = 43%
V = 70 M.P.H.
D = 50.5%

FULLY CONTROLLED ACCESS HIGHWAY
NO NEW RIGHT-OF-WAY

CONVENTIONAL SYMBOLS
(USED IN PLANS)

	EXISTING	NEW
BUILDINGS AND STRUCTURES		
GUARD RAIL		
CONCRETE RIGHT-OF-WAY MARKER		
STEEL RIGHT-OF-WAY MARKER		
LOCATION SURVEY MARKER		
UTILITIES		
UNDERGROUND CABLE TV	CATV	CATV
FIBER OPTICS	FO	FO
OVERHEAD TELEPHONE		
UNDERGROUND TELEPHONE	T	T
OVERHEAD POWER		
UNDERGROUND POWER	P	P
GAS	G	G
WATER	W	W
MANHOLE	SAN	
FIRE HYDRANT	HYD	
WATER VALVE	WV	
WATER METER	WM	
DROP INLET	DI	
DITCH BLOCK		
GROUND MOUNTED SIGN	SIGN	
LIGHT POLE		
H-FRAME POWER POLE		
TELEPHONE PEDESTAL	PED	
FENCE		
CHAIN LINK	V	
WOVEN WIRE	X	
GATE POST		
BENCHMARK	BM	

NOTE: DASHED OR OPEN SYMBOLS INDICATE EXISTING FEATURES

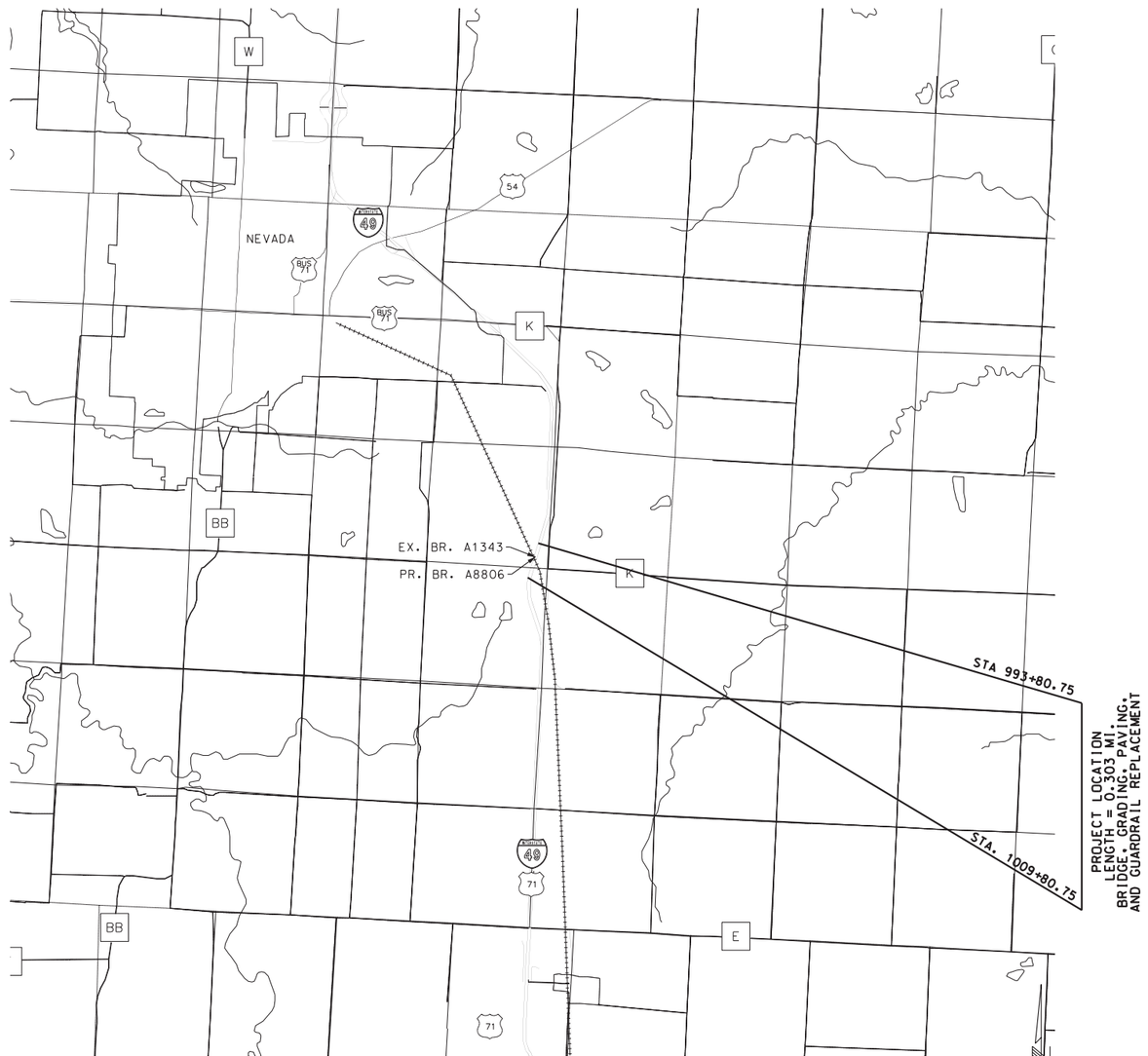

NOT TO SCALE

UTILITY INFORMATION NOTE: THE EXISTENCE AND APPROXIMATE LOCATION OF UTILITY FACILITIES KNOWN TO EXIST, AS SHOWN ON THE PLANS, ARE BASED ON THE BEST INFORMATION AVAILABLE TO THE COMMISSION AT THIS TIME. THIS INFORMATION IS PROVIDED BY THE COMMISSION "AS-IS" AND THE COMMISSION EXPRESSLY DISCLAIMS ANY REPRESENTATION OR WARRANTY AS TO THE COMPLETENESS, ACCURACY, OR SUITABILITY OF THE INFORMATION FOR ANY USE. RELIANCE UPON THIS INFORMATION IS DONE AT THE RISK AND PERIL OF THE USER, AND THE COMMISSION SHALL NOT BE LIABLE FOR ANY DAMAGES THAT MAY ARISE FROM ANY ERROR IN THE INFORMATION. IT IS, THEREFORE, THE RESPONSIBILITY OF THE CONTRACTOR TO VERIFY THE EXISTENCE, LOCATION, AND STATUS OF ANY FACILITY. SUCH VERIFICATION INCLUDES DIRECT CONTACT WITH THE LISTED UTILITIES.

INDEX OF SHEETS

DESCRIPTION	SHEET NUMBER
TITLE SHEET	1
TYPICAL SECTIONS (TS) (2 SHEETS)	2
QUANTITIES (QU) (4 SHEETS)	3
PLAN-PROFILE (PP)	4-5
RIGHT OF WAY PLAN (RW)	6
TRAFFIC CONTROL SHEETS (TC)	7-22
EROSION CONTROL (EC)	23
PAVEMENT MARKING (PM)	24-26
CROSS SECTIONS (XS)	1-10
BRIDGE DRAWINGS (B)	1-31

LENGTH OF PROJECT

I-49:

BEGINNING OF PROJECT	STA 993+80.75
END OF PROJECT	STA. 1009+80.75
APPARENT LENGTH	1,600.00 FEET

EQUATIONS AND EXCEPTIONS

NONE

TOTAL CORRECTIONS	0.00	FEET
NET LENGTH OF PROJECT	1,600.00	FEET
STATE LENGTH	0.303	MILES

STATE OF MISSOURI
EARL HARRISON, JR.
NUMBER
2003019813
REGISTERED PROFESSIONAL ENGINEER

THIS SHEET HAS BEEN SIGNED, SEALED AND DATED ELECTRONICALLY.

DATE PREPARED: 8/3/2020

ROUTE	STATE
I-49	MO

DISTRICT	SHEET NO.
SW	1

COUNTY: VERNON

JOB NO.: J7I3363

CONTRACT ID.

PROJECT NO.

BRIDGE NO.

DESCRIPTION	DATE

MISSOURI HIGHWAYS AND TRANSPORTATION COMMISSION
105 WEST CAPITOL
JEFFERSON CITY, MO 65102
1-888-ASK-MODOT (1-888-275-6636)

Hg Consult inc engineers planners

Hg CONSULT, INC.
PRO. ENGINEER 2010005873

EARL HARRISON, JR.
PROFESSIONAL ENGINEER
E-2003019813

REV.

G:\My Drive\Hg Projects\2018\18.077 Vernon County Bridge (HW LOCHNER)\Civil\Sheet_Files\Title\001_TITLE_J7I3363_I1_I49.dgn 1:21:26 PM 8/3/2020

I-49 OPTIONAL PAVEMENT
8" NON-REINFORCED PCCP
4" TYPE 5 AGGREGATE BASE

OR

7 1/4" BITUMINOUS BASE (64-22)
TOPPED WITH 1 3/4" BP1 (64-22)
4" TYPE 5 AGGREGATE BASE

EXTEND FULL DEPTH PAVEMENT
MIN. 2' BEYOND TRAVELWAY

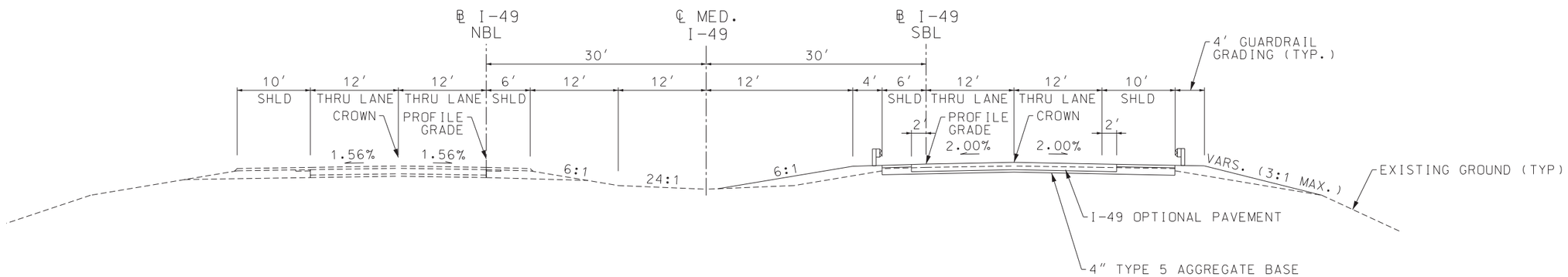

PROPOSED SECTION ON TANGENT

TYPICAL SECTION I-49

STA. 993+80.75 TO STA. 1009+80.75
BRIDGE EXCEPTION STA. 1000+21.82 - 1002+85.18
BRIDGE APPROACH SLAB (MAJOR) STA. 1000+02.53 - 1000+22.53
AND STA. 1002+84.47 - 1003+04.47
CONCRETE APPROACH PAVEMENT STA. 999+53.53 - 1002+02.53
AND STA. 1003+04.47 - 1003+25.47

NOTE:
BRIDGE, BRIDGE APPROACH SLAB
AND CONCRETE APPROACH PAVEMENT
STATIONING BASED ON ℄ I-49 SBL.

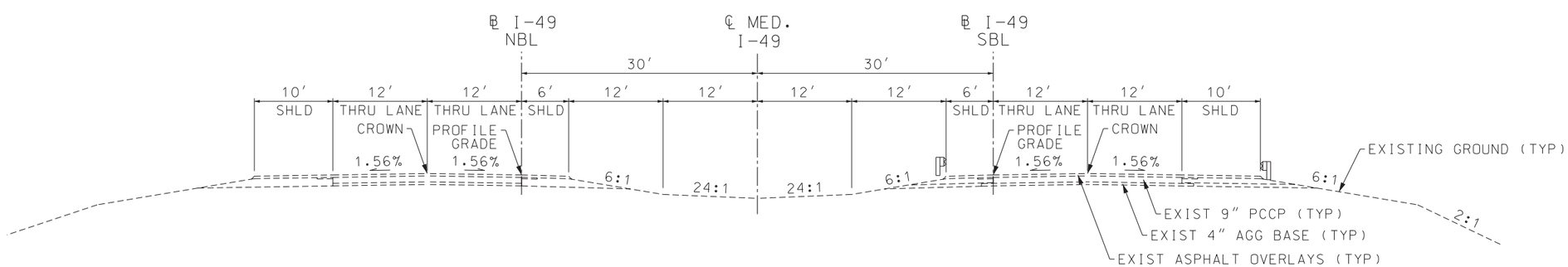

EXISTING SECTION ON TANGENT

TYPICAL SECTION I-49

STA. 993+80.75 TO STA. 1009+80.75
BRIDGE EXCEPTION STA. 1000+43.25 - 1002+34.25

TYPICAL SECTIONS
I-49
SHEET 1 OF 2

STATE OF MISSOURI
EARL HARRISON, JR.
NUMBER
E-2003019813
REGISTERED PROFESSIONAL ENGINEER

THIS SHEET HAS BEEN SIGNED, SEALED AND DATED ELECTRONICALLY.

DATE PREPARED	
8/3/2020	
ROUTE	STATE
I-49	MO
DISTRICT	SHEET NO.
SW	2
COUNTY	
VERNON	
JOB NO.	
J7I3363	
CONTRACT ID.	
PROJECT NO.	
BRIDGE NO.	

DESCRIPTION	DATE

MISSOURI HIGHWAYS AND TRANSPORTATION COMMISSION
105 WEST CAPITOL
JEFFERSON CITY, MO 65102
1-888-ASK-MODOT (1-888-275-6636)

Hg Consult Inc engineers planners

Hg CONSULT, INC.
PRO. ENGINEER 2010005873

EARL HARRISON, JR.
PROFESSIONAL ENGINEER
E-2003019813

REV.

G:\My Drive\Hg Projects\2018\18.077 Vernon County Bridge (HW LOCHNER)\Civil\Sheet_Files\TypicalSections\002_TS_01_J7I3363_i10_I49.dgn 1:21:28 PM 8/3/2020

TEMP. CROSSOVER OPTIONAL PAVEMENT
7.5" JPCP
ROCK BASE

OR

9" BITUMINOUS PAVEMENT
ROCK BASE

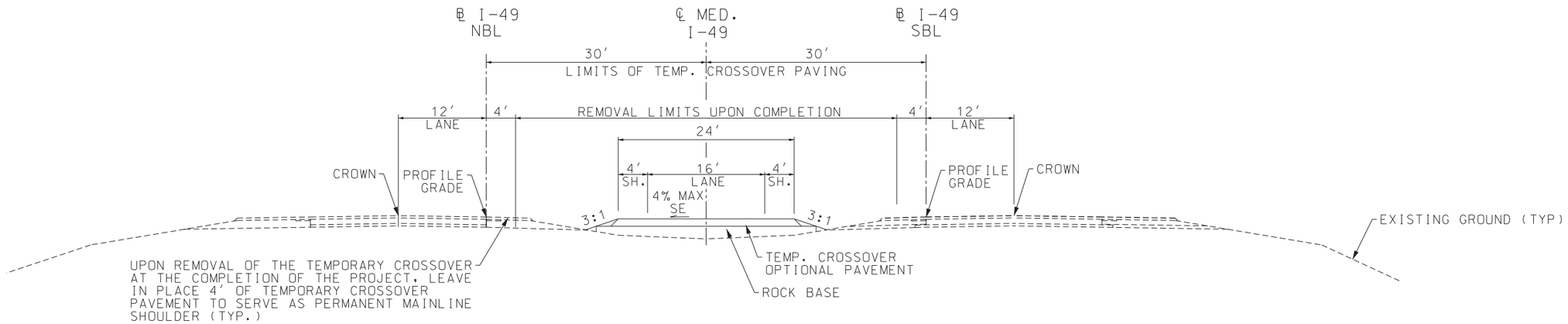

TYPICAL SECTION
PROPOSED TEMPORARY MEDIAN CROSSOVERS
I-49 SB TRAFFIC (ONE LANE)
(SEE PLANS FOR LOCATIONS & ADDITIONAL DETAILS)

TYPICAL SECTIONS
I-49
SHEET 2 OF 2

STATE OF MISSOURI
EARL HARRISON, JR.
NUMBER
E-2003019813
REGISTERED PROFESSIONAL ENGINEER

THIS SHEET HAS BEEN SIGNED, SEALED AND DATED ELECTRONICALLY.

DATE PREPARED	
8/3/2020	
ROUTE	STATE
I-49	MO
DISTRICT	SHEET NO.
SW	2
COUNTY	
VERNON	
JOB NO.	
J7I3363	
CONTRACT ID.	
PROJECT NO.	
BRIDGE NO.	

DESCRIPTION	DATE

MISSOURI HIGHWAYS AND TRANSPORTATION COMMISSION
105 WEST CAPITOL
JEFFERSON CITY, MO 65102
1-888-ASK-MODOT (1-888-275-6636)

Hg Consult Inc engineers planners

Hg CONSULT, INC.
PRO. ENGINEER 2010005873

EARL HARRISON, JR.
PROFESSIONAL
ENGINEER
E-2003019813

REV.

G:\My Drive\Hg Projects\2018\18.077 Vernon County Bridge (HW LOCHNER)\Civil\Sheet_Files\TypicalSections\002_TS_02_J7I3363_I10_I49.dgn 1:21:30 PM 8/3/2020

MISSOURI HIGHWAYS AND TRANSPORTATION COMMISSION

SUMMARY OF QUANTITIES

REMOVAL OF IMPROVEMENTS

FROM STATION	TO STATION	LOCATION	DESCRIPTION	APPROX. QTY.	UNITS	REMARKS
952+52	956+26	I-49 SB MEDIAN	EX. SHOULDER	160	SQ. YD.	FOR CONSTRUCTION OF TEMP. CROSSOVER
957+91	961+60	I-49 NB MEDIAN	EX. SHOULDER	164	SQ. YD.	FOR CONSTRUCTION OF TEMP. CROSSOVER
952+52	961+60	I-49 MEDIAN	TEMP. CROSSOVER PAVEMENT	1135	SQ. YD.	REMOVE UPON COMPLETION OF PROJECT
1055+00	1058+63	I-49 NB MEDIAN	EX. SHOULDER	161	SQ. YD.	FOR CONSTRUCTION OF TEMP. CROSSOVER
1060+41	1064+08	I-49 SB MEDIAN	EX. SHOULDER	163	SQ. YD.	FOR CONSTRUCTION OF TEMP. CROSSOVER
1055+00	1064+08	I-49 MEDIAN	TEMP. CROSSOVER PAVEMENT	1221	SQ. YD.	REMOVE UPON COMPLETION OF PROJECT
993+80.75	1000+54	I-49 SB MEDIAN	EX. SHOULDER	358	SQ. YD.	
993+80.75	1000+30	I-49 SB OUTSIDE	EX. SHOULDER	555	SQ. YD.	
993+80.75	1000+54	I-49 SB	EX. MAINLINE PAVEMENT	1830	SQ. YD.	
1002+49	1009+80.75	I-49 SB MEDIAN	EX. SHOULDER	317	SQ. YD.	
1002+23	1009+80.75	I-49 SB OUTSIDE	EX. SHOULDER	782	SQ. YD.	
1002+23	1009+80.75	I-49 SB	EX. MAINLINE PAVEMENT	2095	SQ. YD.	
992+77	1000+59	I-49 SB MEDIAN	EX. GUARDRAIL	782	LN. FT.	NE BRIDGE A1343 END
996+72	1000+27	I-49 SB OUTSIDE	EX. GUARDRAIL	355	LN. FT.	NW BRIDGE A1343 END
1000+35	1000+55	I-49 SB MEDIAN	EX. TYPE A CURB & CONC.	20	LN. FT.	NE BRIDGE A1343 END
1000+07	1000+27	I-49 SB OUTSIDE	EX. TYPE A CURB & CONC.	20	LN. FT.	NW BRIDGE A1343 END
1002+22	1002+42	I-49 SB MEDIAN	EX. TYPE A CURB & CONC.	20	LN. FT.	SE BRIDGE A1343 END
1002+51	1002+71	I-49 SB OUTSIDE	EX. TYPE A CURB & CONC.	20	LN. FT.	SW BRIDGE A1343 END
			LUMP SUM	1		

MOBILIZATION

LUMP SUM = 1

CONTRACTOR FURNISHED SURVEYING AND STAKING

LUMP SUM = 1

ADDITIONAL MOBIL. FOR SEEDING

1 EACH

TYPE A CURB

FROM STATION	TO STATION	LOCATION	CURB (FT)	REMARKS
999+38.98	999+75.82	I-49 SB LANE	36.83	NW CORNER
999+78.98	1000+15.82	I-49 SB LANE	36.83	NE CORNER
1002+63.18	1003+00.02	I-49 SB LANE	36.83	SW CORNER
1003+03.18	1003+40.02	I-49 SB LANE	36.83	SE CORNER
		SUBTOTAL	147.32	
		TOTAL	148	

SHAPING SLOPES, CLASS III

LOCATION	QUANTITY (STA.)	REMARKS
I-49 SB	1	NW CORNER OF SB BRIDGE MASH END TERMINAL
I-49 SB	1	NE CORNER OF SB BRIDGE MASH END TERMINAL
I-49 NB	1	NW CORNER OF NB BRIDGE MASH END TERMINAL
I-49 NB	1	NE CORNER OF NB BRIDGE MASH END TERMINAL
TOTAL	4	

EARTHWORK

FROM STATION	TO STATION	LOCATION	CLASS A EXCAVATION (CY)	COMPACTING EMBANKMENT (CY)	EXCESS CLASS A (1) (CY)	REMARKS
993+80.75	1009+80.75	I-49 SB	1	2894		BRIDGE EXCEPTION STA. 1000+21.82 TO 1002+85.18
1000+21.82	RR	I-49 SB	2680	152		NORTH BRIDGE END
RR	1002+85.18	I-49 SB	2486	112	1148	SOUTH BRIDGE END
		TOTALS	5167	3158	148	

(1) FOR INFORMATION ONLY

LINEAR GRADING TYPE 2

FROM STATION	TO STATION	LOCATION	QUANTITY (STA)	REMARKS
0+00.00	9+12.26	NORTH TEMP. CROSSOVER	9.1	INSTALL NORTH TEMP. CROSSOVER
0+00.00	9+12.26	NORTH TEMP. CROSSOVER	9.1	REMOVE NORTH TEMP. CROSSOVER
0+00.00	9+11.74	SOUTH TEMP. CROSSOVER	9.1	INSTALL SOUTH TEMP. CROSSOVER
0+00.00	9+11.74	SOUTH TEMP. CROSSOVER	9.1	REMOVE SOUTH TEMP. CROSSOVER
		TOTAL	36.4	

OPTIONAL PAVEMENT AND BASE

			I-49 MAINLINE	TEMPORARY CROSSOVERS		I-49 MAINLINE	TEMP. X-OVERS	
FROM STATION	TO STATION	LOCATION	OPTIONAL PAVEMENT (SQ YD)	OPTIONAL PAVEMENT (SQ YD)	A2 SHOULDER (SQ YD)	4" TYPE 5 AGGREGATE BASE (SQ YD)	ROCK BASE (SQ YD)	REMARKS
993+80.75	999+53.53	I-49 SB LANE	1782		764	2546		
1003+25.47	1009+80.75	I-49 SB LANE	2058		883	2941		
0+00.00	9+12.26	NORTH TEMP. CROSSOVER		1680			1680	
0+00.00	9+11.74	SOUTH TEMP. CROSSOVER		1646			1646	
		SUBTOTAL	3840	3326	1647	✳ 5487	3326	
		TOTAL	3840	3326	1647	✳ 5487	3326	

✳ SUB-TOTAL. SEE CONCRETE APPROACH PAVEMENT TABLE.

CONCRETE APPROACH PAVEMENT

FROM STATION	TO STATION	LENGTH	WIDTH	LOCATION	CONCRETE PAVEMENT APPROACH (SQ YD)	4" TYPE 5 AGGREGATE BASE (SQ YD)	REMARKS
999+53.53	1000+02.53		40.00	BL I-49 SB	156	156	NORTH END BRIDGE A8806
1003+04.47	1003+25.47	21	40.00	BL I-49 SB	156	156	SOUTH END BRIDGE A8806
				TOTAL	312	# 312	

SUB-TOTAL. SEE OPTIONAL PAVEMENT AND BASE TABLE.

CONDUIT

FROM STATION	TO STATION	LOCATION	CONDUIT, 4 IN., TRENCHED (LF)	CONDUIT, 4 IN., PUSHED (LF)	REMARKS
1000+37	1003+12	I-49 MED.	75	200	STUB ENDS ABOVE GROUND AND CAP. COORDINATE WITH CENTRYLINK
		TOTAL	75	200	

SUMMARY OF QUANTITIES
SHEET 1 OF 4

STATE OF MISSOURI
EARL HARRISON, JR.
NUMBER
2003019813
REGISTERED PROFESSIONAL ENGINEER

THIS SHEET HAS BEEN SIGNED, SEALED AND DATED ELECTRONICALLY.

DATE PREPARED: 8/27/2020

ROUTE	STATE
I-49	MO
DISTRICT	**SHEET NO.**
SW	3

COUNTY: VERNON

JOB NO.: J7I3363

CONTRACT ID.

PROJECT NO.

BRIDGE NO.

DESCRIPTION	DATE

MISSOURI HIGHWAYS AND TRANSPORTATION COMMISSION

105 WEST CAPITOL
JEFFERSON CITY, MO 65102
1-888-ASK-MODOT (1-888-275-6636)

Hg Consult Inc engineers planners

Hg CONSULT, INC.
PRO. ENGINEER 2010005873

EARL HARRISON, JR.
PROFESSIONAL
ENGINEER
E-2003019813

REV.

MISSOURI HIGHWAYS AND TRANSPORTATION COMMISSION

SUMMARY OF QUANTITIES

DRAIN BASIN

STATION	LOCATION	OFFSET	2'X4' (EA)	18" DIA (FT)	ROCK LINING (CY)	REMARKS
999+58.99	I-49 SB LANE	31.4' RT	1	77.5	2	NW BRIDGE END
999+93.79	I-49 SB LANE	3.4' LT	1	14.5	2	NE BRIDGE END
1002+85.21	I-49 SB LANE	31.4' RT	1	71.9	2	SW BRIDGE END
1003+20.01	I-49 SB LANE	3.4' LT	1	12.0	2	SE BRIDGE END
	SUBTOTAL		4	175.9	8	
	TOTAL		4	176	8	

TEMPORARY EROSION CONTROL

FROM STATION	TO STATION	LOCATION	OFFSET	ROCK DITCH CHECK (LF)	SILT FENCE (LF)	SEDIMENT REMOVAL (CY)	REMARKS
990+70	999+37	I-49 SB LANE	RT		867	9	NORTH
993+81	999+77	I-49 SB LANE	LT		599	6	NORTH
999+65	999+86	I-49 SB LANE	RT	45		3	NORTH - 3 DITCH CHECKS SPACED 15' APART
1001+81	1001+72	I-49 SB LANE	RT	45		3	SOUTH - 3 DITCH CHECKS SPACED 15' APART
1002+52	1010+52	I-49 SB LANE	RT		833	9	SOUTH
1003+38	1009+81	I-49 SB LANE	LT		645	7	SOUTH
		SUBTOTAL		90	2944	37	
		TOTAL		90	2944	37	

GUARDRAIL

FROM STATION	TO STATION	LOCATION	MGS GUARDRAIL (FT)	TYPE A MASH END TERMINAL (EA)	MGS VERTICAL BARRIER TRANSITION (EA)	MGS END ANCHOR (EA)	REMARKS
990+96	999+72	I-49 SB	787.5	1	1		NW CORNER OF SB BRIDGE
993+89	1000+15	I-49 SB	537.5	1	1		NE CORNER OF SB BRIDGE
1002+64	1010+49	I-49 SB	750		1	1	SW CORNER OF SB BRIDGE
999+95	1000+96	I-49 NB	12.5	1	1		NW CORNER OF NB BRIDGE
1000+30	1001+31	I-49 NB	12.5	1	1		NE CORNER OF NB BRIDGE
		TOTAL	2100	4	5	1	

SEEDING - COOL SEASON MIXTURES

FROM STATION	TO STATION	LOCATION	OFFSET	QUANTITY (AC)	REMARKS
990+70	1001+17	I-49 SB	RT	0.7	NORTH
993+81	1001+76	I-49 SB	LT	0.4	NORTH
1001+25	1010+52	I-49 SB	RT	0.5	SOUTH
1000+65	1009+81	I-49 SB	LT	0.4	SOUTH
952+50	961+61	I-49	MED	0.6	NORTH TEMP. X-OVER
1055+00	1064+08	I-49	MED	0.6	SOUTH TEMP. X-OVER
		TOTAL		3.3	

TYPE 1 DITCH LINER

FROM STATION	TO STATION	LOCATION	FURNISH (CY)	PLACE (CY)	GEOTEXTILE FABRIC (CY)	REMARKS
999+60	1000+27	I-49 SB RT	9	9	43	NORTH END
1001+69	1001+96	I-49 SB RT	7	7	29	SOUTH END
		SUBTOTAL	16	16	72	
		TOTAL	16	16	72	

TYPE 2 ROCK BLANKET

FROM STATION	TO STATION	LOCATION	FURNISH (CY)	PLACE (CY)	GEOTEXTILE FABRIC (SY)	REMARKS
999+71	1000+49	I-49 MEDIAN	218	218	436	
1002+19	1003+18	I-49 MEDIAN	218	218	436	
		SUBTOTAL	436	436	872	
		TOTAL	436	436	872	

SHOULDER RUMBLE STRIP

FROM STATION	TO STATION	LOCATION	QUANTITY (STA.)	REMARKS
952+52	956+26	I-49 SB INSIDE SHOULDER	3.7	INSTALL AFTER CROSSOVER REMOVAL
957+91	961+60	I-49 NB INSIDE SHOULDER	3.7	INSTALL AFTER CROSSOVER REMOVAL
993+81	999+53	I-49 SB INSIDE SHOULDER	5.7	
993+81	999+53	I-49 SB OUTSIDE SHOULDER	5.7	
1003+26	1009+82	I-49 SB INSIDE SHOULDER	6.6	
1003+26	1009+82	I-49 SB OUTSIDE SHOULDER	6.6	
1055+00	1058+63	I-49 NB INSIDE SHOULDER	3.6	INSTALL AFTER CROSSOVER REMOVAL
1060+41	1064+08	I-49 SB INSIDE SHOULDER	3.7	INSTALL AFTER CROSSOVER REMOVAL
PROJECT TOTALS			39.3	

PAVEMENT EDGE TREATMENT

FROM STATION	TO STATION	LOCATION	QUANTITY (L.F.)	REMARKS
952+51	956+27	I-49 SB	376	NORTH X-OVER, SBL
957+90	961+62	I-49 SB	372	NORTH X-OVER, NBL
1055+00	1058+64	I-49 NB	364	SOUTH X-OVER, NBL
1060+40	1064+08	I-49 NB	368	SOUTH X-OVER, SBL
TOTAL			1480	

CHAIN-LINK FENCE (48 IN.)

STATION	LOCATION	LOCATION	QUANTITY (LF)	REMARKS
1001+01	I-49 SB LANE	NORTH TEMP. CROSSOVER	123	3' BEHIND NORTH RET. WALL, EXCEPT BRIDGE COLUMNS
1002+06	I-49 SB LANE	NORTH TEMP. CROSSOVER	103	3' BEHIND SOUTH RET. WALL, EXCEPT BRIDGE COLUMNS
		TOTAL	226	

SUMMARY OF QUANTITIES
SHEET 2 OF 4

STATE OF MISSOURI
EARL HARRISON, JR.
NUMBER
E-2003019813
REGISTERED PROFESSIONAL ENGINEER

THIS SHEET HAS BEEN SIGNED, SEALED AND DATED ELECTRONICALLY.

DATE PREPARED: 8/3/2020

ROUTE	STATE
I-49	MO
DISTRICT	**SHEET NO.**
SW	3

COUNTY: VERNON

JOB NO.: J7I3363

CONTRACT ID.:

PROJECT NO.:

BRIDGE NO.:

DESCRIPTION	DATE

MISSOURI HIGHWAYS AND TRANSPORTATION COMMISSION

MoDOT
105 WEST CAPITOL
JEFFERSON CITY, MO 65102
1-888-ASK-MODOT (1-888-275-6636)

Hg Consult inc engineers planners

Hg CONSULT, INC.
PRO. ENGINEER 2010005873

EARL HARRISON, JR.
PROFESSIONAL
ENGINEER
E-2003019813

REV.

MISSOURI HIGHWAYS AND TRANSPORTATION COMMISSION

SUMMARY OF QUANTITIES

PAVEMENT MARKING REMOVAL							
FROM STATION	TO STATION	LOCATION	4" WHITE SOLID (LF)	4" YELLOW SOLID (LF)	6" WHITE INTERMITTENT (LF)	6" YELLOW SOLID (LF)	REMARKS
EXISTING PAVEMENT MARKING							
939+12	956+26	I-49 SB			430		
952+52	956+26	I-49 SB				374	
950+00	1078+40	I-49 NB			3210		
957+91	1058+63	I-49 NB				10072	
1060+41	1064+08	I-49 SB				367	
TEMPORARY PAVEMENT MARKING							
939+12	957+03	I-49 SB	1791				
953+53	961+61	I-49 SB	808				8" TEMP. X-OVER ON MAINLINE
950+00	960+41	I-49 NB		1041			
952+52	960+41	I-49 NB		789			8" TEMP. X-OVER ON MAINLINE
960+41	1056+06	I-49 NB		9565			
1056+06	1078+40	I-49 NB		2234			
1056+06	1064+08	I-49 NB		802			8" TEMP. X-OVER ON MAINLINE
1055+00	1063+02	I-49 SB	802				8" TEMP. X-OVER ON MAINLINE
SUBTOTAL			3401	14431	3640	10813	
PROJECT TOTALS			32285				

TEMPORARY LIGHTING
LUMP SUM = 1

TEMPORARY PAVEMENT MARKING						
PHASE	FROM STATION	TO STATION	LOCATION	4" WHITE SOLID (LF)	4" YELLOW SOLID (LF)	REMARKS
PHASE 2	939+12	957+03	I-49 SB	1791		
PHASE 2	0+00	8+94	N. TEMP. X-OVER		1788	TEMP. 8" YELLOW
PHASE 2	0+00	9+12	N. TEMP. X-OVER	1824		TEMP. 8" WHITE
PHASE 2	950+00	960+42	I-49 NB		1042	
PHASE 2	960+42	1056+06	I-49 NB CL		19128	DOUBLE SOLID YELLOW
PHASE 2	961+61	1055+00	I-49 NB		9339	RT EDGE LINE FOR SB TRAFFIC
PHASE 2	1056+06	1078+40	I-49 NB		2234	
PHASE 2	1+06	9+12	S. TEMP. X-OVER		1612	TEMP. 8" YELLOW
PHASE 2	0+00	8+06	S. TEMP. X-OVER	1612		TEMP. 8" WHITE
			SUBTOTAL	5,227	35,143	
			PROJECT TOTAL	4,780	23,960	

PERMANENT PAVEMENT MARKING						
FROM STATION	TO STATION	LOCATION	HIGH BUILD WATERBORNE PAVEMENT MARKING PAINT, 6", WHITE, TYPE L BEADS SOLID (LF)	HIGH BUILD WATERBORNE PAVEMENT MARKING PAINT, 6", WHITE, TYPE L BEADS INTERMITTENT (LF)	HIGH BUILD WATERBORNE PAVEMENT MARKING PAINT, 6", YELLOW, TYPE L BEADS SOLID (LF)	REMARKS
939+12	956+26	I-49 SB		430		TEMP. P.M. REPLACEMENT
952+52	956+26	I-49 SB			374	TEMP. P.M. REPLACEMENT
950+00	1078+40	I-49 NB		3210		TEMP. P.M. REPLACEMENT
957+91	1058+63	I-49 NB			10072	TEMP. P.M. REPLACEMENT
993+81	1009+81	I-49 SB	1604	400	1604	
1060+41	1064+08	I-49 SB			367	TEMP. P.M. REPLACEMENT
SUBTOTAL			1604	4040	12417	
PROJECT TOTALS			5644		12417	

SUMMARY OF QUANTITIES
SHEET 3 OF 4

STATE OF MISSOURI
EARL HARRISON, JR.
NUMBER
E-2003019813
REGISTERED PROFESSIONAL ENGINEER

THIS SHEET HAS BEEN SIGNED, SEALED AND DATED ELECTRONICALLY.

DATE PREPARED 8/3/2020

ROUTE	STATE
I-49	MO
DISTRICT	**SHEET NO.**
SW	3

COUNTY: VERNON

JOB NO. J7I3363

CONTRACT ID.

PROJECT NO.

BRIDGE NO.

DESCRIPTION	DATE

MISSOURI HIGHWAYS AND TRANSPORTATION COMMISSION
105 WEST CAPITOL
JEFFERSON CITY, MO 65102
1-888-ASK-MODOT (1-888-275-6636)

Hg Consult Inc engineers planners

Hg CONSULT, INC.
PRO. ENGINEER 2010005873

EARL HARRISON, JR.
PROFESSIONAL
ENGINEER
E-2003019813

REV.

EFFECTIVE: 01-01-2019

SIGN	SIZE IN.	AREA SQ.FT.	QTY EACH	TOTAL AREA SQ.FT.	QTY RELOC EACH	TOTAL RELOC SQ.FT.	SIGN NUM.	DESCRIPTION
WARNING SIGNS								
W01-1L	48X48	16.00						TURN (SYMBOL LEFT ARROW)
W01-1R	48X48	16.00						TURN (SYMBOL RIGHT ARROW)
W01-2L	48X48	16.00						CURVE (SYMBOL LEFT ARROW)
W01-2R	48X48	16.00						CURVE (SYMBOL RIGHT ARROW)
W01-3L	48X48	16.00						REVERSE TURN (SYMBOL LEFT ARROW)
W01-3R	48X48	16.00						REVERSE TURN (SYMBOL RIGHT ARROW)
W01-4L	48X48	16.00	2	32			15	REVERSE CURVE (SYMBOL LEFT ARROW)
W01-4R	48X48	16.00	2	32			15	REVERSE CURVE (SYMBOL RIGHT ARROW)
W01-4bL	48X48	16.00						DOUBLE ARROW REVERSE CURVE (SYMBOL LT ARROWS)
W01-4bR	48X48	16.00						DOUBLE ARROW REVERSE CURVE (SYMBOL RT ARROWS)
W01-4cL	48X48	16.00						TRIPLE ARROW REVERSE CURVE (SYMBOL LT ARROWS)
W01-4cR	48X48	16.00						TRIPLE ARROW REVERSE CURVE (SYMBOL RT ARROWS)
W01-6	60X30	12.50	4	50			16	HORIZONTAL ARROW (SYMBOL)
W01-6a	72X36	18.00						HORIZ. ARROW (SYMBOL ON PERMANENT BARRICADE)
W01-7	60X30	12.50						DOUBLE HEAD HORIZONTAL ARROW (SYMBOL)
W01-7a	72X36	18.00						DOUBLE HEAD HORIZ. ARROW (SYMBOL ON PERM. BARR.)
W01-8	18X24	3.00						CHEVRON (SYMBOL)
W01-8a	30X36	7.50						CHEVRON (SYMBOL FOR DIVIDED HIGHWAYS)
W03-1	48X48	16.00						STOP AHEAD (SYMBOL)
W03-2	48X48	16.00						YIELD AHEAD (SYMBOL)
W03-3	48X48	16.00						SIGNAL AHEAD (SYMBOL)
W03-4	48X48	16.00						BE PREPARED TO STOP
W03-5	48X48	16.00						SPEED LIMIT AHEAD
W04-1L	48X48	16.00						MERGE (SYMBOL FROM LEFT)
W04-1R	48X48	16.00						MERGE (SYMBOL FROM RIGHT)
W04-1aL	48X48	16.00	1	16			6A	MERGE (ARROW SYMBOL)
W04-1aR	48X48	16.00	1	16			6A	MERGE (ARROW SYMBOL)
W05-1	48X48	16.00						ROAD/BRIDGE/RAMP NARROWS
W05-3	48X48	16.00						ONE LANE BRIDGE
W05-5	48X48	16.00						NARROW LANES
W06-1	48X48	16.00						DIVIDED HIGHWAY (SYMBOL)
W06-2	48X48	16.00						DIVIDED HIGHWAY END (SYMBOL)
W06-3	48X48	16.00	7	112			31	TWO WAY TRAFFIC (SYMBOL)
W07-3a	30X24	5.00	4	20			44A	NEXT XX MILES (PLAQUE)
W08-1	48X48	16.00						BUMP
W08-2	48X48	16.00						DIP
W08-3	48X48	16.00						PAVEMENT ENDS
W08-4	48X48	16.00						SOFT SHOULDER
W08-5	48X48	16.00						SLIPPERY WHEN WET (SYMBOL)
W08-6	48X48	16.00						TRUCK CROSSING
W08-6c	48X48	16.00						TRUCK ENTRANCE
W08-7	36X36	9.00						LOOSE GRAVEL
W08-7a	36X36	9.00						FRESH OIL/LOOSE GRAVEL
W08-9	48X48	16.00						LOW SHOULDER
W08-11	48X48	16.00						UNEVEN LANES
W08-12	48X48	16.00						NO CENTER LINE
W08-15	48X48	16.00						GROOVED PAVEMENT
W08-15P	30X24	5.00						MOTORCYCLE (PLAQUE)
W08-17	48X48	16.00						SHOULDER DROP-OFF (SYMBOL)
W08-17P	30X24	5.00						SHOULDER DROP-OFF (PLAQUE)
W10-1	42RND.	9.62						RAILROAD CROSSING
W012-1	36X36	9.00						DOUBLE DOWN ARROW (SYMBOL)
W012-2	48X48	16.00						LOW CLEARANCE (SYMBOL)
W012-2X	24X18	3.00						LOW CLEARANCE (PLAQUE)
W012-2a	84X24	14.00						OVERHEAD LOW CLEARANCE (FEET AND INCHES)
W012-4	120X60	50.00						LOW CLEARANCE XX FT XX IN XX MILES AHEAD
W012-5	120X60	50.00						WIDTH RESTRICTION XX FT XX IN XX MILES AHEAD
W013-1	30X30	6.25	4	24			44	ADVISORY SPEED (PLAQUE)
W016-2	30X24	5.00						XXX FEET (PLAQUE)
W016-3	30X24	5.00						X MILE (PLAQUE)
W020-1	48X48	16.00	6	96			2	ROAD/BRIDGE/RAMP WORK AHEAD
W020-2	48X48	16.00						DETOUR AHEAD
W020-3	48X48	16.00						ROAD CLOSED AHEAD
W020-4	48X48	16.00						ONE LANE ROAD AHEAD
W020-5	48X48	16.00	4	64			5	RIGHT/CENTER/LEFT LANE CLOSED AHEAD
W020-5a	48X48	16.00						2 RIGHT/CENTER/LEFT LANES CLOSED AHEAD
W020-6a	48X48	16.00	2	32			6	RIGHT/CENTER/LEFT LANE CLOSED
W020-7a	48X48	16.00						FLAGGER (SYMBOL) WITH FLAGS
W021-2	36X36	9.00						FRESH OIL
W021-5	48X48	16.00						SHOULDER WORK AHEAD
W024-1R	48X48	16.00						DOUBLE REVERSE CURVE, 1 LANE, RT
W024-1cP	30X30	6.25						ALL LANES
W024-1L	48X48	16.00						DOUBLE REVERSE CURVE, 1 LANE, LT
G022-1	21X15	2.19						WET PAINT (ARROW PIVOTS)

SIGN	SIZE IN.	AREA SQ.FT.	QTY EACH	TOTAL SQ.FT.	QTY RELOC EACH	TOTAL RELOC SQ.FT.	SIGN NUM.	DESCRIPTION
GUIDE SIGNS								
E05-1	36X48	12.00						GORE EXIT
E05-2	48X36	12.00						EXIT OPEN
E05-2a	48X36	12.00						EXIT CLOSED
G020-1	60X24	10.00	4	40			1	ROAD WORK NEXT 3 MILES
G020-2	48X24	8.00	4	32			26	END ROAD WORK
G020-4	36X18	4.50						PILOT CAR FOLLOW ME
G020-4a	42X30	8.75						PLEASE WAIT FOR PILOT CAR
G020-5aP	36X24	6.00	23	138			54	WORK ZONE (PLAQUE)
M04-8a	24X18	3.00						END DETOUR
M04-9L	48X36	12.00						DETOUR (LEFT ARROW)
M04-9R	48X36	12.00						DETOUR (RIGHT ARROW)
M04-9P	48X12	4.00						STREET NAME (PLAQUE)
M04-10L	48X18	6.00						DETOUR (ARROW LEFT)
M04-10R	48X18	6.00						DETOUR (ARROW RIGHT)
REGULATORY SIGNS								
R1-1	48X48	13.25						STOP
R1-2	60TRI.	12.50						YIELD
R1-2a	36X36	9.00						TO ONCOMING TRAFFIC (PLAQUE)
R1-3P	30X12	2.50						ALL WAY (PLAQUE)
R2-1	36X48	12.00	13	156			4/25	SPEED LIMIT (9 @ 60, 4 @ 70)
R3-1	48X48	16.00						NO RIGHT TURN (SYMBOL)
R3-2	48X48	16.00						NO LEFT TURN (SYMBOL)
R3-3	36X36	9.00						NO TURNS
R3-4	48X48	16.00						NO U-TURN (SYMBOL)
R3-7L	30X30	6.25						LEFT LANE MUST TURN LEFT
R3-7R	30X30	6.25						RIGHT LANE MUST TURN RIGHT
R4-1	36X48	12.00	14	168			46	DO NOT PASS
R4-2	36X48	12.00						PASS WITH CARE
R4-8a	36X48	12.00						KEEP LEFT (HORIZONTAL ARROW)
R4-7a	36X48	12.00						KEEP RIGHT (HORIZONTAL ARROW)
R5-1	48X48	16.00	2	32			55	DO NOT ENTER
R5-1a	36X24	6.00						WRONG WAY
R6-1L	54X18	6.75						ONE WAY ARROW (LEFT)
R6-1R	54X18	6.75						ONE WAY ARROW (RIGHT)
R6-2L	24X30	5.00						ONE WAY (LEFT)
R6-2R	24X30	5.00						ONE WAY (RIGHT)
R9-9	24X12	2.00						SIDEWALK CLOSED
R9-11L	24X18	3.00						SIDEWALK CLOSED AHEAD, (ARROW LEFT) CROSS HERE
R9-11R	24X18	3.00						SIDEWALK CLOSED AHEAD, (ARROW RIGHT) CROSS HERE
R10-6	24X36	6.00						STOP HERE ON RED (45° ARROW)
R11-2	48X30	10.00	1	10			29	ROAD CLOSED
R11-3a	60X30	12.50						ROAD CLOSED XX MILES AHEAD LOCAL TRAFFIC ONLY
R11-4	60X30	12.50						ROAD CLOSED TO THRU TRAFFIC
CONST-3A	60X48	20.00						FINE SIGN
CONST-3X	56X12	4.67						SPEEDING/PASSING (PLATE)
MISCELLANEOUS SIGNS								
CONST-5	48X36	12.00						POINT OF PRESENCE
CONST-4	96X48	32.00	2	64				POINT OF PRESENCE
CONST-7	48X24	8.00						RATE OUR WORK ZONE
CONST-7	72X36	18.00	2	36				RATE OUR WORK ZONE
CONST-8	48X36	12.00	4	48				WORK ZONE NO PHONE ZONE

616-10.05 CONSTRUCTION SIGNS	TOTAL	1211
616-10.10 RELOCATED SIGNS	TOTAL	0

ITEM NUMBER	TOTAL QTY	DESCRIPTION
6122008		IMPACT ATTENUATOR 40 MPH (SAND BARRELS)
6122009		IMPACT ATTENUATOR 45 MPH (SAND BARRELS)
6122010		IMPACT ATTENUATOR 50 MPH (SAND BARRELS)
6122012		IMPACT ATTENUATOR 55 MPH (SAND BARRELS)
6122014		IMPACT ATTENUATOR 60 MPH (SAND BARRELS)
6122017		IMPACT ATTENUATOR 65 MPH (SAND BARRELS)
6122019	2	IMPACT ATTENUATOR 70 MPH (SAND BARRELS)
6122020	4	REPLACEMENT SAND BARREL
6122030		IMPACT ATTENUATOR (RELOCATION)
6123000A	2	TRUCK OR TRAILER MOUNTED ATTENUATOR (TMA)
6161007		SPEED LIMIT AND STROBE LIGHT ASSEMBLY
6161008	12	ADVANCED WARNING RAIL SYSTEM
6161009	4	FLAG ASSEMBLY
6161012		BUOYS (BOATS KEEP OUT)
6161013		BUOYS (NO WAKE)
6161014		SPECIAL SIGN ASSEMBLY (BOATS KEEP OUT)
6161024		CHANNELIZER (TRIM LINE) WITH LIGHT
6161025	210	CHANNELIZER (TRIM LINE)
6161030		TYPE III MOVEABLE BARRICADE
6161031	8	TYPE III MOVEABLE BARRICADE WITH LIGHTS
6161033		DIRECTION INDICATOR BARRICADE
6161034	28	DIRECTION INDICATOR BARRICADE, WITH LIGHT
6161040	2	FLASHING ARROW PANEL
6161047		TYPE III OBJECT MARKER
6161052		WARNING LIGHT, TYPE B
6161055	28	SEQUENTIAL FLASHING WARNING LIGHT
6161070	228	TUBULAR MARKER
6161095		RADAR SPEED ADVISORY SYSTEM
6161096		CHANGEABLE MESSAGE SIGN, COMMISSION FURNISHED/RETAINED
6161098A		CHANGEABLE MESSAGE SIGN W/O COMM. INTERFACE, CONTRACTOR FURNISHED/RETAINED
6161099	2	CHANGEABLE MESSAGE SIGN WITH COMM. INTERFACE, CONTRACTOR FURNISHED/RETAINED
6162000A		WORK ZONE TRAFFIC SIGNAL SYSTEM
6162002	8	TEMPORARY LONG-TERM RUMBLE STRIPS
6162004		TEMPORARY SHORT-TERM RUMBLE STRIPS
6173600D	460	TEMPORARY TRAFFIC BARRIER CONTRACTOR FURNISHED/RETAINED
6173602B		TEMPORARY TRAFFIC BARRIER CONTRACTOR FURNISHED/COMMISSION RETAINED
6174000A		TEMP. TRAFFIC BARRIER HEIGHT TRANSITION
6175010A		RELOCATING TEMPORARY TRAFFIC BARRIER
6176000B		TEMPORARY TRAFFIC BARRIER COMMISSION FURNISHED/RETAINED
6173700B		TEMP. TRAFFIC BARRIER HEIGHT TRANSITION COMMISSION FURNISHED/RETAINED
6173700B		TEMPORARY TRAFFIC BARRIER, ANCHORED CONTRACTOR FURNISHED/RETAINED
6175011B		RELOCATING TEMPORARY TRAFFIC BARRIER, ANCHORED
6208064A		TEMPORARY RAISED PAVEMENT MARKER
9029400		TEMPORARY TRAFFIC SIGNALS
9029401		TEMPORARY TRAFFIC SIGNALS AND LIGHTING
6178001		TRAFFIC BARRIER DELINEATOR, WHITE
6178002A		TRAFFIC BARRIER DELINEATOR, YELLOW
6178003A		TRAFFIC BARRIER DELINEATOR, YELLOW/YELL.

SUMMARY OF QUANTITIES
SHEET 4 OF 4

STATE OF MISSOURI
EARL HARRISON, JR.
NUMBER E-2003019813
REGISTERED PROFESSIONAL ENGINEER

THIS SHEET HAS BEEN SIGNED, SEALED AND DATED ELECTRONICALLY.

DATE PREPARED 8/3/2020

ROUTE	STATE
I-49	MO
DISTRICT	SHEET NO.
SW	3

COUNTY: VERNON
JOB NO.: J7I3363
CONTRACT ID.
PROJECT NO.
BRIDGE NO.

DATE	DESCRIPTION

MISSOURI HIGHWAYS AND TRANSPORTATION COMMISSION
105 WEST CAPITOL
JEFFERSON CITY, MO 65102
1-888-ASK-MODOT (1-888-275-6636)

Hg Consult Inc engineers planners

Hg CONSULT, INC.
PRO. ENGINEER 2010005873

EARL HARRISON, JR.
PROFESSIONAL ENGINEER
E-2003019813

REV.

SCALE

0 100 200 300 400 500

NE COR BR. A2817 (I-49 NB)
INSTALL MGS VERTICAL BARRIER TRANSITION,
12.5'TYPE MGS GUARDRAIL WITH
TYPE A MASH CRASHWORTHY END TERMINAL

NW COR BR. A2817 (I-49 NB)
INSTALL MGS VERTICAL BARRIER TRANSITION,
12.5'TYPE MGS GUARDRAIL WITH
TYPE A MASH CRASHWORTHY END TERMINAL

NE COR BR. A8806
INSTALL MGS VERTICAL BARRIER TRANSITION,
537.5'TYPE MGS GUARDRAIL WITH
MASH CRASHWORTHY END TERMINAL

STA. 1000+02.53 - 1000+22.53 ℄ I-49 SBL
BRIDGE A8806 NORTH BRIDGE END
BUILD BRIDGE APPROACH SLAB (MAJOR) (BRIDGE ITEM)

STA. 999+53.53 - 1002+02.53 ℄ I-49 SBL
BRIDGE A8806 NORTH BRIDGE END
BUILD CONCRETE APPROACH PAVEMENT (156 S.Y.)

STA. 999+93.79 ℄ I-49 SBL, 3.40' LT (NE BR.)
BUILD DRAIN BASIN W/
2 C.Y. ROCK LINING

STA. 999+78.98 - 1000+15.82 ℄ I-49 SBL
BUILD 36'-10" 4" TYPE A CURB (NE BR. COR)

STA. 999+86 - 1001+13 ℄ MED. I-49
FURNISH AND PLACE TYPE 2 ROCK BLANKET
(218 C.Y.) W/ GEOTEXTILE FABRIC (436 S.Y.)

STA. 1002+84.47 - 1003+04.47 ℄ I-49 SBL
BRIDGE A8806 SOUTH BRIDGE END
BUILD BRIDGE APPROACH SLAB (MAJOR) (BRIDGE ITEM)

STA. 1003+04.47 - 1003+25.47 ℄ I-49 SBL
BRIDGE A8806 SOUTH BRIDGE END
BUILD CONCRETE APPROACH PAVEMENT (156 S.Y.)

STA. 1003+20.01 ℄ I-49 SBL, 3.40' LT (SE BR.)
BUILD DRAIN BASIN W/
2 C.Y. ROCK LINING

STA. 1003+03.18 - 1003+40.02 ℄ I-49 SBL
BUILD 36'-10" 4" TYPE A CURB (SE BR. COR)

STA. 1001+66 - 1002+93 ℄ MED. I-49
FURNISH AND PLACE TYPE 2 ROCK BLANKET
(218 C.Y. W/ GEOTEXTILE FABRIC (436 S.Y.)

EX. ℄ MED. I-49 SPIRAL
PI 1007+51.36
Ls 300.00'
Ys 7.85'
Xs 299.82'
LT 200.06'
ST 100.06'

EX. ℄ MED. I-49 CURVE
TOTAL PI 1013+12.67
SC 1008+51.29
CS 1017+33.60
TOTAL Δ 35° 28' 00.1" (LT)
D 2° 59' 59.2"
Lc 882.31'
Ls 300.00'
Ts 761.38'
R 1,910.00'
θs 4° 29' 58.8"
Xs 299.82'
Ys 7.85'
S.E. 8% MAX.

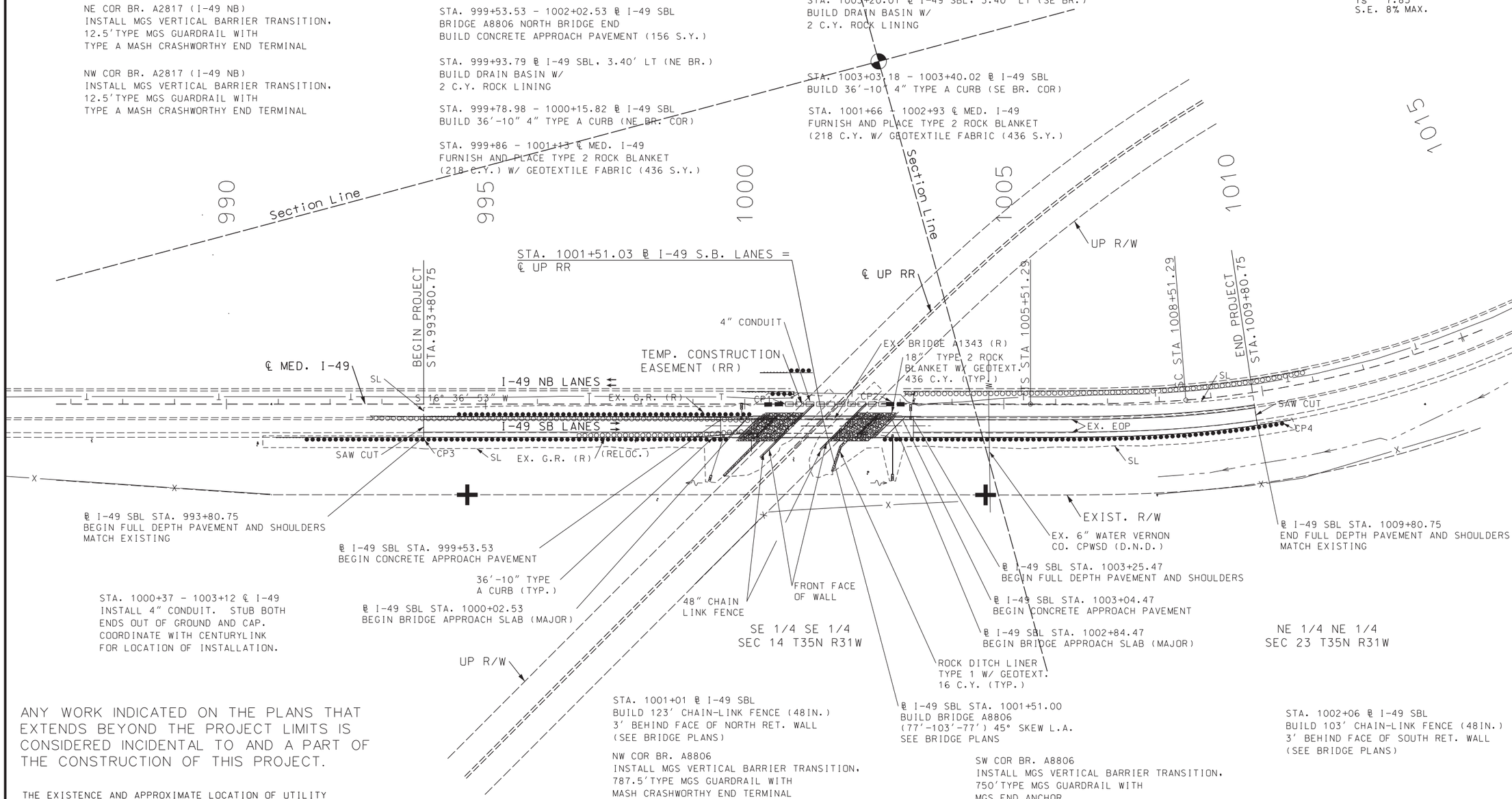

ANY WORK INDICATED ON THE PLANS THAT EXTENDS BEYOND THE PROJECT LIMITS IS CONSIDERED INCIDENTAL TO AND A PART OF THE CONSTRUCTION OF THIS PROJECT.

THE EXISTENCE AND APPROXIMATE LOCATION OF UTILITY FACILITIES KNOWN TO EXIST, AS SHOWN ON THE PLANS, ARE BASED ON THE BEST INFORMATION AVAILABLE TO THE COMMISSION AT THIS TIME. THIS INFORMATION IS PROVIDED BY THE COMMISSION "AS-IS" AND THE COMMISSION EXPRESSLY DISCLAIMS ANY REPRESENTATION OR WARRANTY AS TO THE COMPLETENESS, ACCURACY, OR SUITABILITY OF THE INFORMATION FOR ANY USE. RELIANCE UPON THIS INFORMATION IS DONE AT THE RISK AND PERIL OF THE USER, AND THE COMMISSION SHALL NOT BE LIABLE FOR ANY DAMAGES THAT MAY ARISE FROM ANY ERROR IN THE INFORMATION.

STA. 1001+01 ℄ I-49 SBL
BUILD 123' CHAIN-LINK FENCE (48IN.)
3' BEHIND FACE OF NORTH RET. WALL
(SEE BRIDGE PLANS)

NW COR BR. A8806
INSTALL MGS VERTICAL BARRIER TRANSITION,
787.5'TYPE MGS GUARDRAIL WITH
MASH CRASHWORTHY END TERMINAL

STA. 990+00.00 - 999+03.51 ℄ I-49 SBL
INSTALL OPTIONAL PAVEMENT W/ A2 SHOULDERS

STA. 999+58.99 ℄ I-49 SBL, 31.40' RT (NW BR.)
BUILD DRAIN BASIN W/
2 C.Y. ROCK LINING

STA. 999+38.98 - 999+75.82 ℄ I-49 SBL
BUILD 36'-10" 4" TYPE A CURB (NW BR. COR)

℄ I-49 SBL STA. 1001+51.00
BUILD BRIDGE A8806
(77'-103'-77') 45° SKEW L.A.
SEE BRIDGE PLANS

SW COR BR. A8806
INSTALL MGS VERTICAL BARRIER TRANSITION,
750'TYPE MGS GUARDRAIL WITH
MGS END ANCHOR

STA. 1003+70.77 - 1013+00.00 ℄ I-49 SBL
INSTALL OPTIONAL PAVEMENT W/ A2 SHOULDERS

STA. 1002+85.21 ℄ I-49 SBL, 31.40' RT (SW BR.)
BUILD DRAIN BASIN W/
2 C.Y. ROCK LINING

STA. 1002+63.18 - 1003+00.02 ℄ I-49 SBL
BUILD 36'-10" 4" TYPE A CURB (SW BR. COR)

STA. 1002+06 ℄ I-49 SBL
BUILD 103' CHAIN-LINK FENCE (48IN.)
3' BEHIND FACE OF SOUTH RET. WALL
(SEE BRIDGE PLANS)

PLAN SHEET
I-49
SHEET 1 OF 1

STATE OF MISSOURI
EARL HARRISON, JR.
NUMBER
E-2003019813
REGISTERED PROFESSIONAL ENGINEER

THIS SHEET HAS BEEN SIGNED, SEALED AND DATED ELECTRONICALLY.

DATE PREPARED	
8/3/2020	
ROUTE	STATE
I-49	MO
DISTRICT	SHEET NO.
SW	4
COUNTY	
VERNON	
JOB NO.	
J7I3363	
CONTRACT ID.	
PROJECT NO.	
BRIDGE NO.	

DATE	DESCRIPTION	REV.

MISSOURI HIGHWAYS AND TRANSPORTATION COMMISSION
105 WEST CAPITOL
JEFFERSON CITY, MO 65102
1-888-ASK-MODOT (1-888-275-6636)

Hg Consult inc engineers planners

Hg CONSULT, INC.
PRO. ENGINEER 2010005873

EARL HARRISON, JR.
PROFESSIONAL
ENGINEER
E-2003019813

G:\My Drive\Hg Projects\2018\18.077 Vernon County Bridge (HW LOCHNER)\Civil\Sheet_Files\Plan\004_PL_01_J7I3363_i100_I49.dgn 1:21:52 PM 8/3/2020

BENCH MARKS - NAVD 1988 GEOID 12A

B.M. #1 - 8" SPIKE (CONTROL POINT #1)
℄ MED. I-49 STA. 1000+78.99, 0.34' RT, EL. 923.46

B.M. #2 - 8" SPIKE (CONTROL POINT #2)
℄ MED. I-49 STA. 1002+83.15, 4.67' LT, EL. 922.62

B.M. #3 - 8" SPIKE (CONTROL POINT #3)
℄ MED. I-49 STA. 993+82.13, 68.90' RT, EL. 911.77

B.M. #4 - 8" SPIKE (CONTROL POINT #4)
℄ MED. I-49 STA. 1010+28.94, 67.96' RT, EL. 913.32

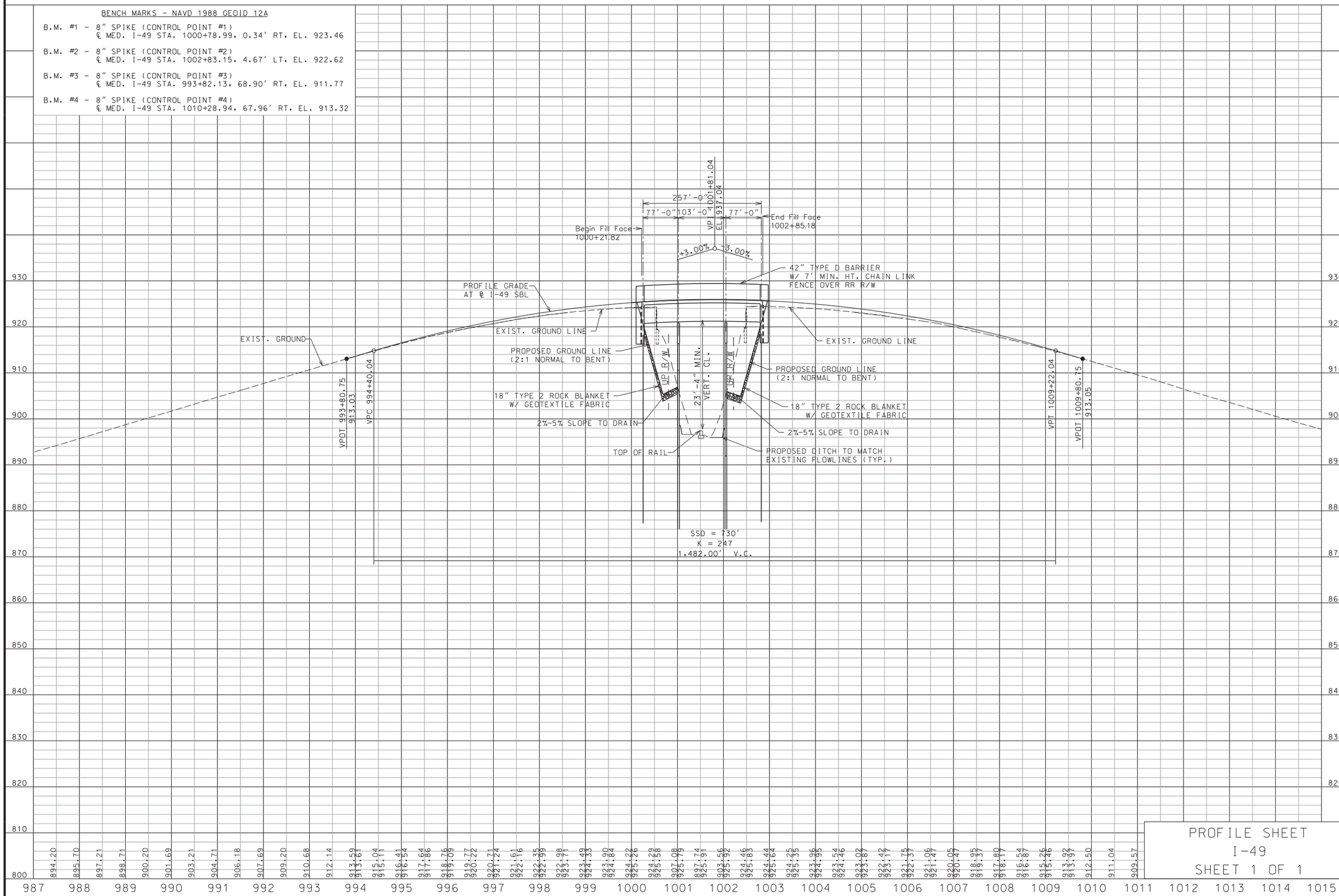

PROFILE SHEET
I-49
SHEET 1 OF 1

STATE OF MISSOURI
EARL HARRISON, JR.
NUMBER
2003019813
REGISTERED PROFESSIONAL ENGINEER

THIS SHEET HAS BEEN SIGNED, SEALED AND DATED ELECTRONICALLY.

DATE PREPARED	
8/3/2020	
ROUTE	STATE
I-49	MO
DISTRICT	SHEET NO.
SW	5
COUNTY	
VERNON	
JOB NO.	
J7I3363	
CONTRACT ID.	
PROJECT NO.	
BRIDGE NO.	

DESCRIPTION	DATE

MISSOURI HIGHWAYS AND TRANSPORTATION COMMISSION
105 WEST CAPITOL
JEFFERSON CITY, MO 65102
1-888-ASK-MODOT (1-888-275-6636)

Hg Consult Inc engineers planners

Hg CONSULT, INC.
PRO. ENGINEER 2010005873

EARL HARRISON, JR.
PROFESSIONAL
ENGINEER
E-2003019813

REV.

G:\My Drive\Hg Projects\2018\18.077 Vernon County Bridge (HW LOCHNER)\Civil\Sheet_Files\Profile\005_PR_01_J7I3363_i100_I49.dgn 1:22:01 PM 8/3/2020

LAND SURVEY MONUMENT
FOUND PK NAIL
SE¼ SE¼ SECTION 14 T35N R31W
DOCUMENT NO. 600-55835

N 597035.221
E 2843414.206

℄ MED. I-49 STA. 1002+58.47
661.24′ LT.
S 88°50′ 00″ E

EX. ℄ MED. I-49 SPIRAL
PI 1007+51.36
Ls 300.00′
Ys 7.85′
Xs 299.82′
LT 200.06′
ST 100.06′

EX. ℄ MED. I-49 CURVE
TOTAL PI 1013+12.67
SC 1008+51.29
CS 1017+33.60
TOTAL Δ 35° 28′ 00.1″ (LT)
D 2° 59′ 59.2″
Lc 882.31′
Ls 300.00′
Ts 761.38′
R 1,910.00′
θs 4° 29′ 58.8″
Xs 299.82′
Ys 7.85′

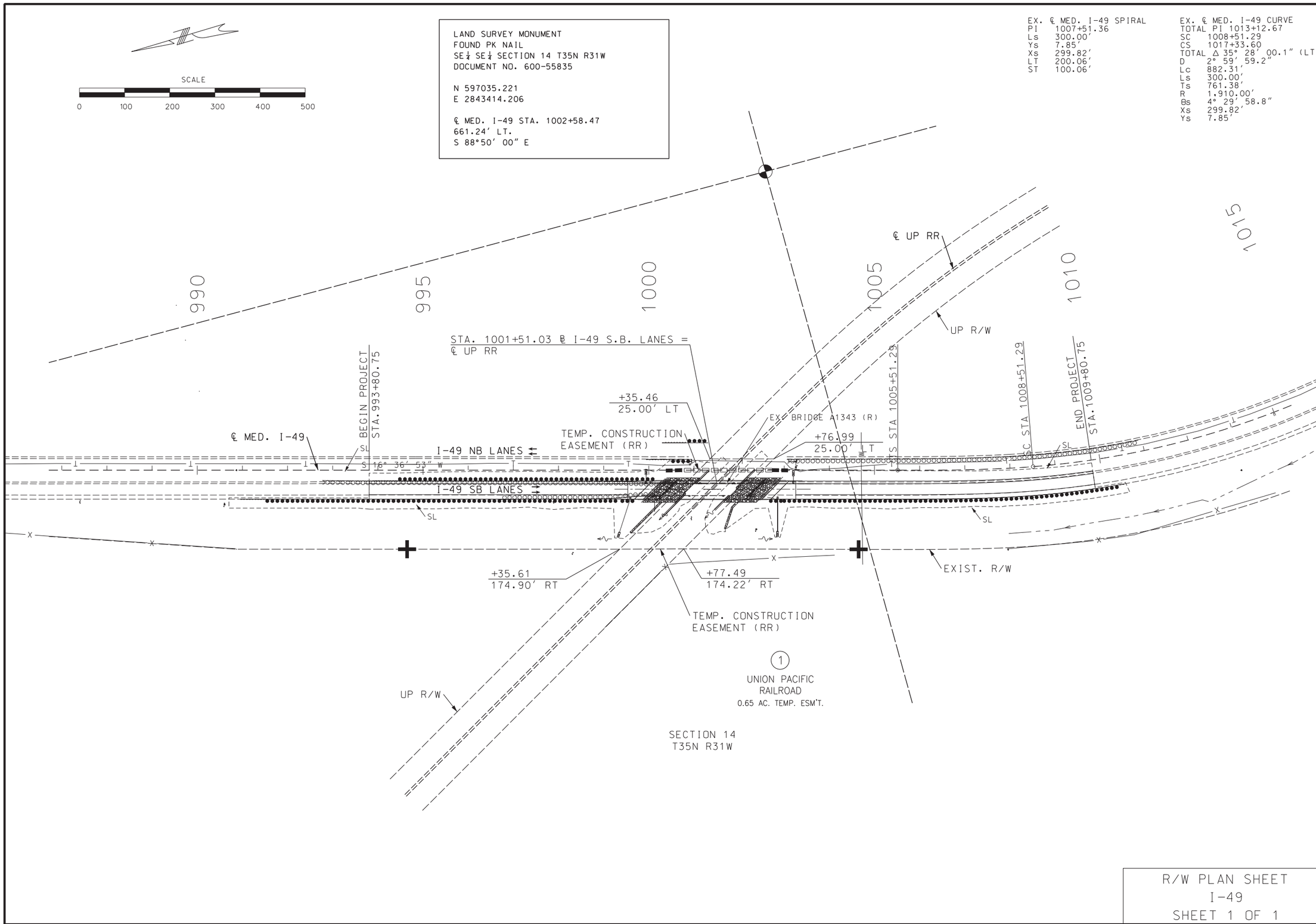

R/W PLAN SHEET
I-49
SHEET 1 OF 1

STATE OF MISSOURI
EARL HARRISON, JR.
NUMBER
E-2003019813
REGISTERED PROFESSIONAL ENGINEER

THIS SHEET HAS BEEN SIGNED, SEALED AND DATED ELECTRONICALLY.

DATE PREPARED	
8/3/2020	
ROUTE	STATE
I-49	MO
DISTRICT	SHEET NO.
SW	6
COUNTY	
VERNON	
JOB NO.	
J7I3363	
CONTRACT ID.	
PROJECT NO.	
BRIDGE NO.	

DATE	DESCRIPTION

MISSOURI HIGHWAYS AND TRANSPORTATION COMMISSION
105 WEST CAPITOL
JEFFERSON CITY, MO 65102
1-888-ASK-MODOT (1-888-275-6636)

Hg Consult Inc engineers planners

Hg CONSULT, INC.
PRO. ENGINEER 2010005873

EARL HARRISON, JR.
PROFESSIONAL
ENGINEER
E-2003019813

REV.

G:\My Drive\Hg Projects\2018\18.077 Vernon County Bridge (HW LOCHNER)\Civil\Sheet_Files\Plan\006_RW_01_J7I3363_i100_I49.dgn 1:22:03 PM 8/3/2020

SPACING AND TAPER LENGTHS FOR WORK ZONE SIGNS, CHANNELIZERS AND CONCRETE BARRIER

SIGN SPACING FOR ADVANCE SIGN SERIES (1) (2)		
PERMANENT POSTED SPEED (MPH)	UNDIVIDED HIGHWAYS (S)	DIVIDED HIGHWAYS (S)
0-35	200′	200′
40-45	350′	500′
50-55	500′	1000′
60-70	1000′	SA - 1000′ SB - 1500′ SC - 2640′

TAPER LENGTHS AND END TREATEMENTS FOR CONCRETE BARRIER				
PERMANENT POSTED SPEED (MPH)	MINIMUM TAPER LENGTH (3)			END TREATMENT (4)
	10′	11′	12′	
> 40	160′	168′	176′	BARRIER HEIGHT TRANSITION
< 40	160′	168′	176′	APPROVED CRASH CUSHION

TAPER LENGTHS AND SPACING FOR CHANNELIZERS							
PERMANENT POSTED SPEED (MPH)	MINIMUM LANE TAPER LENGTH (L)			MINIMUM SHOULDER TAPER LENGTH (5) (T1)	OPTIONAL BUFFER LENGTH (B)	MAXIMUM CHANNELIZER SPACING	
	10′ LANE	11′ LANE	12′ LANE			THROUGH TAPERS	THROUGH BUFFER/ WORK AREAS
0-35	205′	225′	245′	70′	280′	35′	40′
40-45	450′	495′	540′	150′	400′	40′	80′
50-55	550′	605′	660′	185′	560′	50′	80′
60-70	700′	770′	840′	235′	840′	60′	120′

NOTES:

(1) SPACING BETWEEN SIGNS AND SPACING BETWEEN LAST SIGN AND FLAGGER, BEGINNING OF TAPER, OF SIGNED CONDITION.

(2) SPACING MAY BE ADJUSTED AS NECESSARY TO MEET FIELD CONDITIONS.

(3) TAPER LENGTHS SHOWN INCLUDE LENGTH REQUIRED FOR LANE AND 10' SHOULDER.

(4) CONCRETE BARRIER MAY BE INSTALLED AT 8:1 FLARE RATE FROM THE SHOULDER POINT OF THE LIMITS OF THE CLEAR ZONE WHERE THE SIDE SLOPE IS 6:1 OR FLATTER.

(5) SHOULDER TAPER LENGTH BASED ON 10' (STANDARD SHOULDER WIDTH) OFFSET.

TRAFFIC CONTROL
SIGN AND DEVICE
SPACINGS AND TAPERS
SHEET 1 OF 16

STATE OF MISSOURI
EARL HARRISON, JR.
NUMBER
E-2003019813
REGISTERED PROFESSIONAL ENGINEER

THIS SHEET HAS BEEN SIGNED, SEALED AND DATED ELECTRONICALLY.

DATE PREPARED 8/3/2020

ROUTE	STATE
I-49	MO
DISTRICT	SHEET NO.
SW	7

COUNTY VERNON

JOB NO. J7I3363

CONTRACT ID.

PROJECT NO.

BRIDGE NO.

DESCRIPTION	DATE

MISSOURI HIGHWAYS AND TRANSPORTATION COMMISSION
105 WEST CAPITOL
JEFFERSON CITY, MO 65102
1-888-ASK-MODOT (1-888-275-6636)

Hg Consult Inc engineers planners

Hg CONSULT, INC.
PRO. ENGINEER 2010005873

EARL HARRISON, JR.
PROFESSIONAL ENGINEER
E-2003019813

REV.

TRAFFIC CONTROL SIGNS & DEVICES

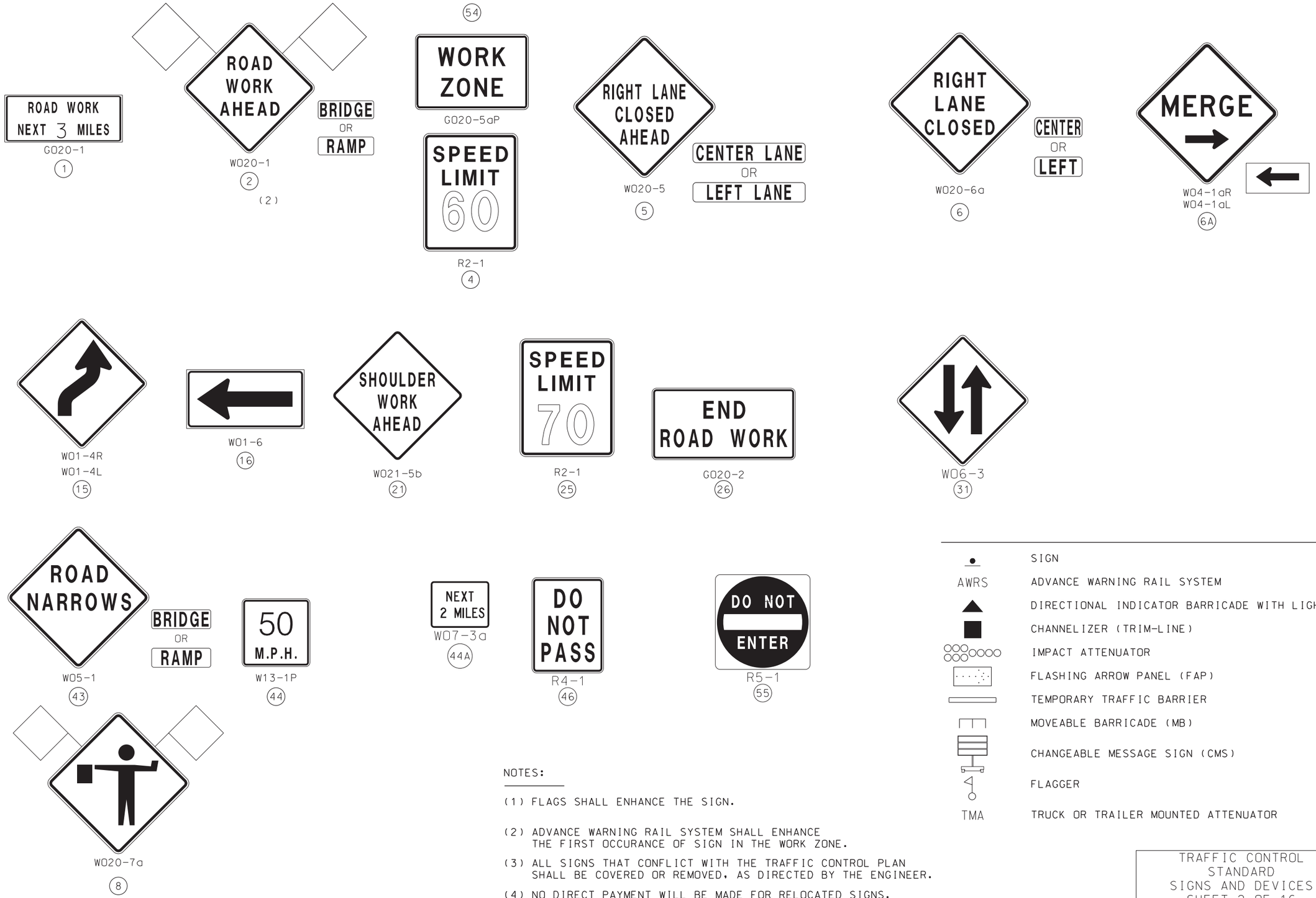

NOTES:

(1) FLAGS SHALL ENHANCE THE SIGN.

(2) ADVANCE WARNING RAIL SYSTEM SHALL ENHANCE THE FIRST OCCURANCE OF SIGN IN THE WORK ZONE.

(3) ALL SIGNS THAT CONFLICT WITH THE TRAFFIC CONTROL PLAN SHALL BE COVERED OR REMOVED, AS DIRECTED BY THE ENGINEER.

(4) NO DIRECT PAYMENT WILL BE MADE FOR RELOCATED SIGNS.

TRAFFIC CONTROL
STANDARD
SIGNS AND DEVICES
SHEET 2 OF 16

STATE OF MISSOURI
EARL HARRISON, JR.
NUMBER E-2003019813
REGISTERED PROFESSIONAL ENGINEER

THIS SHEET HAS BEEN SIGNED, SEALED AND DATED ELECTRONICALLY.

DATE PREPARED	
8/3/2020	
ROUTE I-49	STATE MO
DISTRICT SW	SHEET NO. 8
COUNTY VERNON	
JOB NO. J7I3363	
CONTRACT ID.	
PROJECT NO.	
BRIDGE NO.	

DATE	DESCRIPTION

MISSOURI HIGHWAYS AND TRANSPORTATION COMMISSION
105 WEST CAPITOL
JEFFERSON CITY, MO 65102
1-888-ASK-MODOT (1-888-275-6636)

Hg Consult Inc engineers planners

Hg CONSULT, INC.
PRO. ENGINEER 2010005873

EARL HARRISON, JR.
PROFESSIONAL
ENGINEER
E-2003019813

REV.

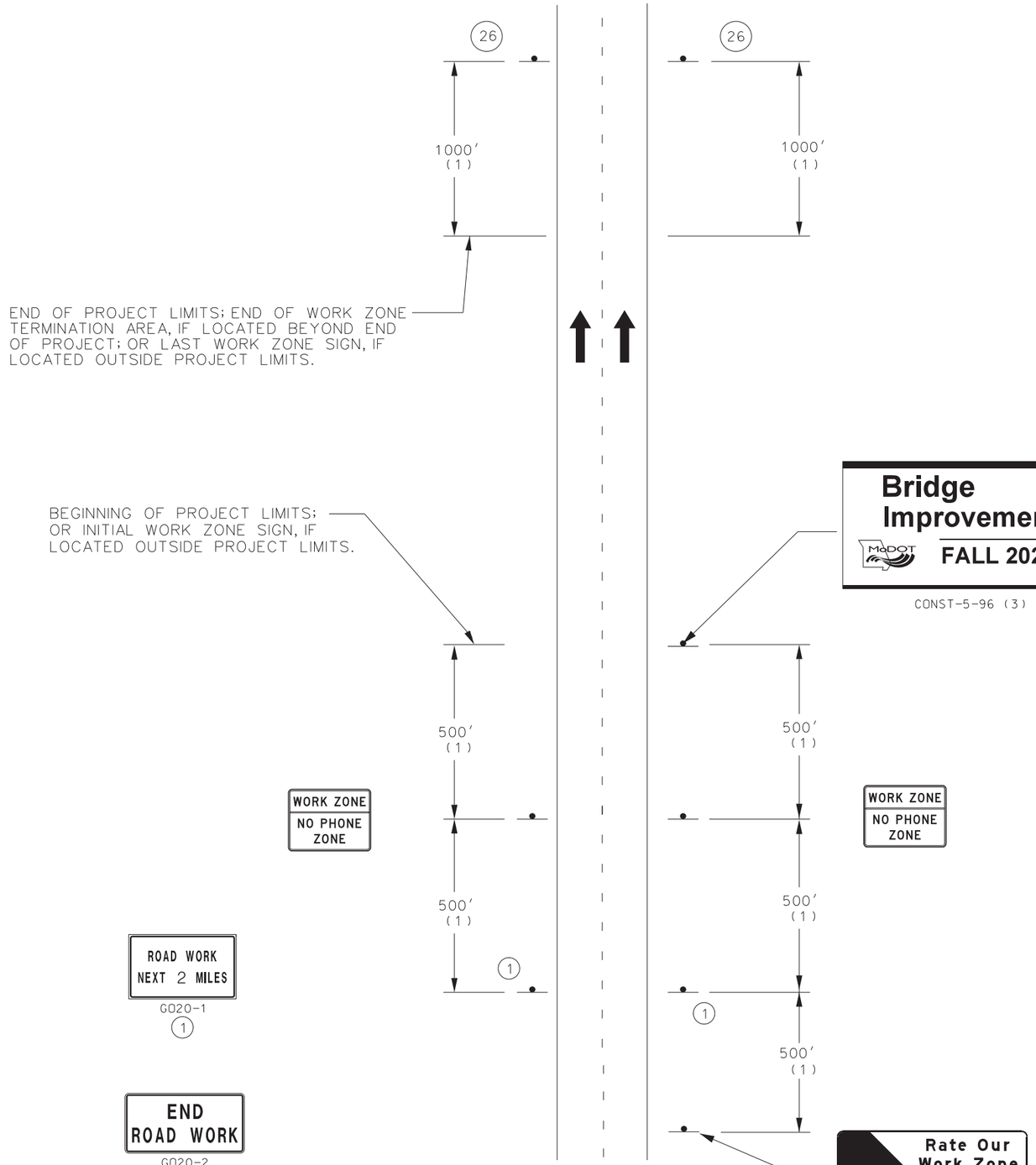

MULTI-LANE DIVIDED
BEGIN/END OF PROJECT SIGNING
(FOR USE ON ALL PROJECTS)

NOTES:

SIGN (1) IS REQUIRED PER EPG 616.2.3.

SIGN (26) IS USED ON ALL PROJECTS WHERE SIGN (1) IS USED.

OTHER SIGNS SUCH AS DETOUR OR ALTERNATE ROUTE SIGNING MAY BE USED OUTSIDE THE PROJECT LIMITS.

ANY EXISTING SIGNING THAT CONFLICTS WITH THE TRAFFIC CONTROL SIGNING SHALL BE COMPLETELY COVERED OR REMOVED.

(1) DISTANCE MAY BE ADJUSTED ACCORDING TO FIELD CONDITIONS. WHERE TRAFFIC BACKUPS ARE EXPECTED BEYOND THE ADVANCE WARNING AREA, ADDITIONAL SIGNING MAY BE NEEDED.

(2) SIGN CONST-7-72 OR CONST-7-48 IS PLACED 500 FEET BEFORE THE BEGINNING OF PROJECT LIMITS OR THE ROAD WORK AHEAD SIGN OR ROAD WORK NEXT XX MILES SIGN, IF USED, WHEN THESE SIGNS ARE LOCATED OUTSIDE THE PROJECT LIMITS.

(3) SIGN CONST-5-96 IS PLACED IN A VISIBLE AREA WITHIN THE PROJECT LIMITS PROVIDED ITS PLACEMENT DOES NOT DISRUPT A SEQUENCE OF SIGNS. IF A VISIBLE LOCATION WITHIN THE PROJECT IS NOT AVAILABLE, THE SIGN MAY BE PLACED 500 FEET BEFORE SIGN CONST-7-72 OR CONST-7-48.

TRAFFIC CONTROL
BEGIN AND END OF
PROJECT SIGNING
SHEET 3 OF 16

STATE OF MISSOURI
EARL HARRISON, JR.
NUMBER
E-2003019813
REGISTERED PROFESSIONAL ENGINEER

THIS SHEET HAS BEEN SIGNED, SEALED AND DATED ELECTRONICALLY.

DATE PREPARED	
8/3/2020	
ROUTE	STATE
I-49	MO
DISTRICT	SHEET NO.
SW	9
COUNTY	
VERNON	
JOB NO.	
J7I3363	
CONTRACT ID.	
PROJECT NO.	
BRIDGE NO.	

DESCRIPTION	DATE

MISSOURI HIGHWAYS AND TRANSPORTATION COMMISSION
105 WEST CAPITOL
JEFFERSON CITY, MO 65102
1-888-ASK-MODOT (1-888-275-6636)

Hg Consult Inc engineers planners

Hg CONSULT, INC.
PRO. ENGINEER 2010005873

EARL HARRISON, JR.
PROFESSIONAL
ENGINEER
E-2003019813

REV.

G:\My Drive\Hg Projects\2018\18.077 Vernon County Bridge (HW LOCHNER)\Civil\Sheet_Files\Traffic Control\009_TC_03_J7I3363_i1_I49_BegEnd.dgn 1:22:09 PM 8/3/2020

EFFECTIVE: 02-01-2009

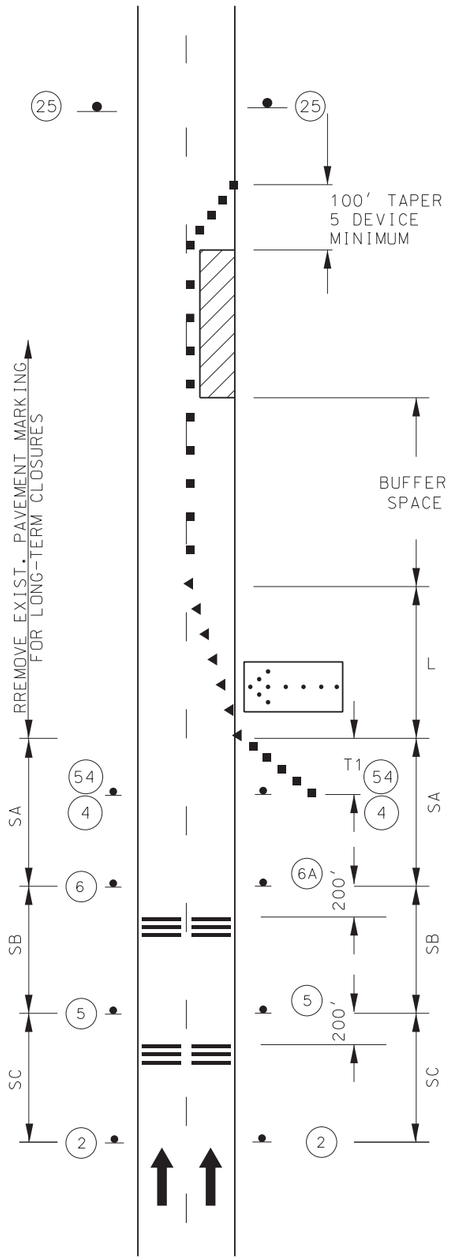

TWO-LANE DIVIDED HIGHWAY

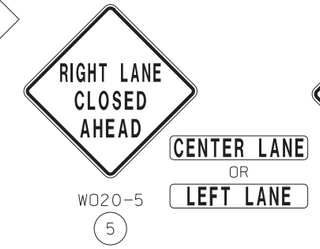

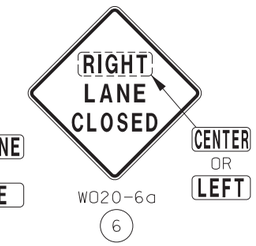

R2-1
4

R2-1
NORMAL SPEED
25

G020-5aP
54

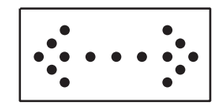

FLASHING
ARROW PANEL

CHANNELIZERS

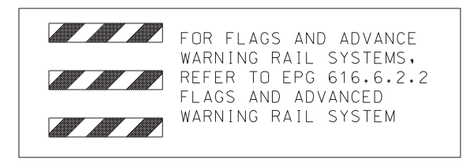

FOR FLAGS AND ADVANCE WARNING RAIL SYSTEMS, REFER TO EPG 616.6.2.2 FLAGS AND ADVANCED WARNING RAIL SYSTEM

DIRECTIONAL INDICATOR
BARRICADES W/ LIGHTS (DIB'S)

TEMPORARY
RUMBLE STRIPS

NOTES:

SEE TRAFFIC CONTROL SHEET 1 OF 10 FOR SIGN SPACING, DEVICE SPACING AND CHANNELIZING TAPER LENGTHS.

REMOVE AND/OR MODIFY ANY EXISTING PAVEMENT MARKING AS NEEDED.

TEMPORARY PAVEMENT MARKING REQUIRED WITH LONG TERM CLOSURES.

THIS INFORMATION ALSO SHALL BE USED WHEN WORK IS BEING PREFORMED IN THE LANE ADJACENT TO THE MEDIAN ON A DIVIDED HIGHWAY. IN THIS CASE, THE LEFT LANE CLOSED SIGNS AND THE CORRESPONDING MERGE OR LANE ENDS SIGN SHALL BE SUBSTITUTED.

TEMPORARY TRAFFIC BARRIERS, IF USED, SHALL COMPLY WITH THE PROVISIONS IN EPG 616.6.85 TEMPORARY TRAFFIC BARRIER AND REVIEW TA-34 LANE CLOSURE WITH A TEMPORARY TRAFFIC BARRIER.

REVIEW EPG TA-34a LANE CLOSURE WITH WIDTH AND LANE RESTRICTIONS DE/CM FOR A LANE CLOSURE WITH WIDTH RESTRICTIONS.

AN ARROW BOARD SHALL BE USED WHEN A FREEWAY LANE IS CLOSED. WHEN MORE THAN ONE FREEWAY LANE IS CLOSED, A SEPARATE ARROW BOARD SHALL BE USED FOR EACH CLOSED LANE.

REVIEW EPG 616.6.83 WARNING LIGHTS WHEN SEQUENTIAL OR WARNING LIGHTS SHOULD BE USED ON NIGHTTIME OPERATIONS.

FOR FLAGS AND ADVANCE WARNING RAIL SYSTEM, REFER TO EPG 616.6.2.2 FLAG AND ADVANCE WARNING RAIL SYSTEM.

REVIEW EPG 616.6.63 CHANNELIZING DEVICES FOR DIFFERENT TYPES AND GUIDELINES FOR THE DEVICES.

REVIEW EPG 616.8.33 (TA-33) STATIONARY LANE CLOSURE ON A DIVIDED HIGHWAY.

TEMPORARY RUMBLE STRIPS SHALL BE ORANGE IN COLOR.

LONG-TERM RUMBLE STRIPS SHALL CONSIST OF 5 STRIPS SEPARATED AT 10-12FT. CENTERS OR MANUFACTURER'S RECOMMENDATION.

SEE EPG 616.6.87 FOR ADDITIONAL INFORMATION ON RUMBLE STRIPS.

TRAFFIC CONTROL
STATIONARY LANE CLOSURE
SHEET 4 OF 16

STATE OF MISSOURI
EARL HARRISON, JR.
NUMBER
E-2003019813
REGISTERED PROFESSIONAL ENGINEER

THIS SHEET HAS BEEN SIGNED, SEALED AND DATED ELECTRONICALLY.

DATE PREPARED	8/3/2020
ROUTE	I-49
STATE	MO
DISTRICT	SW
SHEET NO.	10
COUNTY	VERNON
JOB NO.	J7I3363
CONTRACT ID.	
PROJECT NO.	
BRIDGE NO.	

DESCRIPTION

DATE

MISSOURI HIGHWAYS AND TRANSPORTATION COMMISSION

105 WEST CAPITOL
JEFFERSON CITY, MO 65102
1-888-ASK-MODOT (1-888-275-6636)

Hg Consult Inc engineers planners

Hg CONSULT, INC.
PRO. ENGINEER 2010005873

EARL HARRISON, JR.
PROFESSIONAL
ENGINEER
E-2003019813

REV.

G:\My Drive\Hg Projects\2018\18.077 Vernon County Bridge (HW LOCHNER)\Civil\Sheet_Files\Traffic Control\010_TC_04_J7I3363_i1_I49_TA-33.dgn 1:22:12 PM 8/3/2020

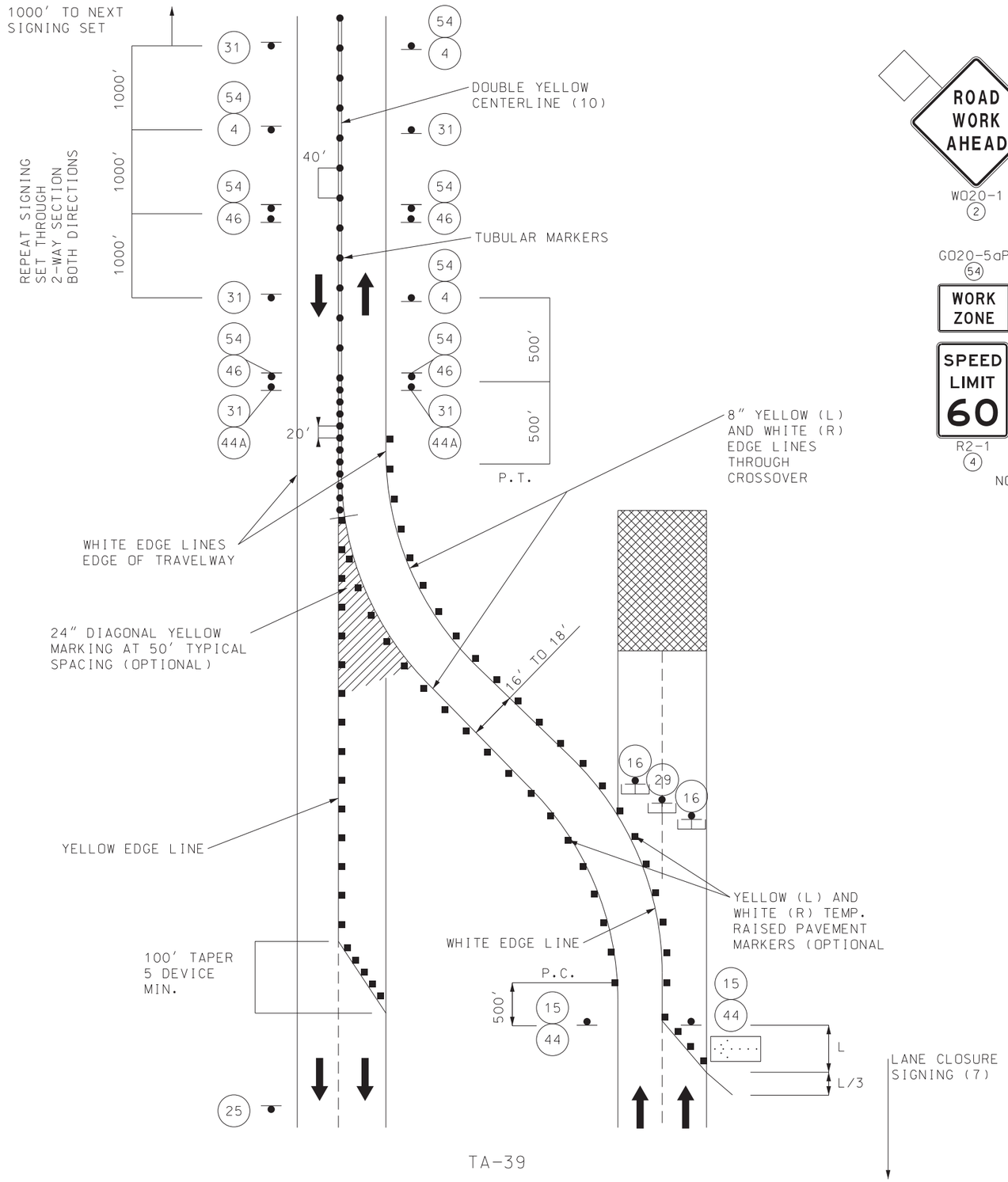

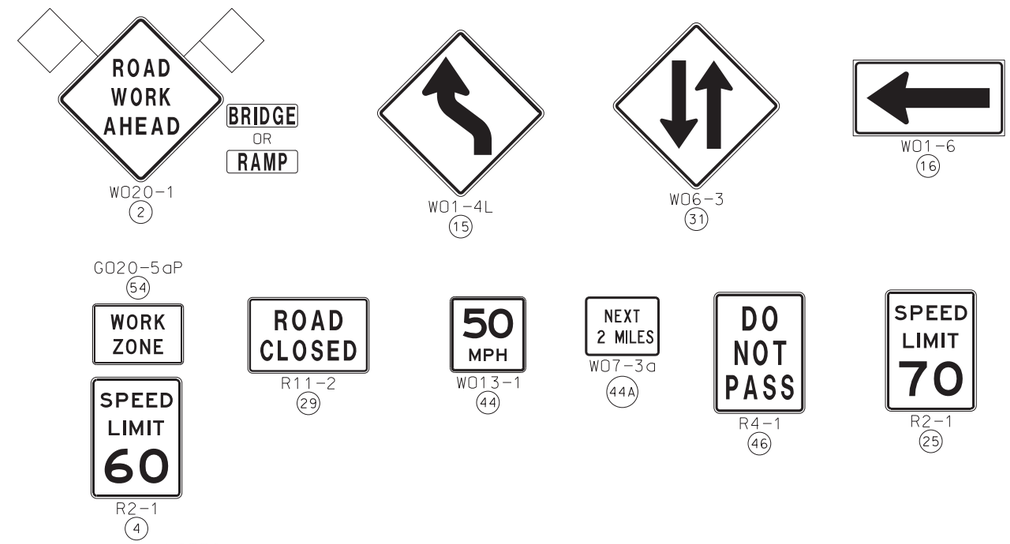

NOTES:

(1) SEE TRAFFIC CONTROL SHEET 1 FOR WORK ZONE SPEED LIMIT GUIDELINES.

(2) SEE TRAFFIC CONTROL SHEET 1 FOR SIGN SPACING, DEVICE SPACING AND CHANNELIZING TAPER LENGTHS.

(3) REMOVE AND/OR MODIFY ANY EXISTING PAVEMENT MARKING AS NEEDED.

(4) TEMPORARY PAVEMENT MARKING REQUIRED WITH LONG TERM CLOSURES.

(5) FOR NIGHT TIME OPERATIONS, REVIEW EPG 616.6.83 WARNING LIGHTS FOR USE OF SEQUENTIAL LIGHTS.

(6) REVIEW EPG 616.6.63 CHANNELIZING DEVICES FOR DIFFERENT TYPES AND GUIDELINES FOR THE DEVICES.

(7) ADVANCED LANE CLOSURE SIGNING IS AS SHOWN ON EPG TA-34, LANE CLOSURE WITH A TEMPORARY TRAFFIC BARRIER.

(8) CROSSOVER PAVEMENT WIDTH MAY BE WIDER AS NEEDED.

(9) FLARE BARRIER TO EXTEND BEYOND CLEAR ZONE OR FLARE BARRIER TO EDGE LINE AND USE APPROVED END TREATMENT.

(10) SEE STANDARD PLAN 616.10 FOR ADDITIONAL INFORMATION.

FOR FLAGS AND ADVANCE WARNING RAIL SYSTEMS, REFER TO EPG 616.6.2.2 FLAGS AND ADVANCED WARNING RAIL SYSTEM

TA-39

TRAFFIC CONTROL
MEDIAN CROSSOVER
DIVIDED HIGHWAY
SHEET 5 OF 16

STATE OF MISSOURI
EARL HARRISON, JR.
NUMBER
E-2003019813
REGISTERED PROFESSIONAL ENGINEER

THIS SHEET HAS BEEN SIGNED, SEALED AND DATED ELECTRONICALLY.

DATE PREPARED	
8/3/2020	
ROUTE	STATE
I-49	MO
DISTRICT	SHEET NO.
SW	11
COUNTY	
VERNON	
JOB NO.	
J7I3363	
CONTRACT ID.	
PROJECT NO.	
BRIDGE NO.	

DATE	DESCRIPTION

MISSOURI HIGHWAYS AND TRANSPORTATION COMMISSION
105 WEST CAPITOL
JEFFERSON CITY, MO 65102
1-888-ASK-MODOT (1-888-275-6636)

Hg Consult Inc engineers planners

Hg CONSULT, INC.
PRO. ENGINEER 2010005873

EARL HARRISON, JR.
PROFESSIONAL ENGINEER
E-2003019813

REV.

G:\My Drive\Hg Projects\2018\18.077 Vernon County Bridge (HW LOCHNER)\Civil\Sheet_Files\Traffic Control\011_TC_05_J7I3363_i1_I49_TA-39_01.dgn 1:22:21 PM 8/3/2020

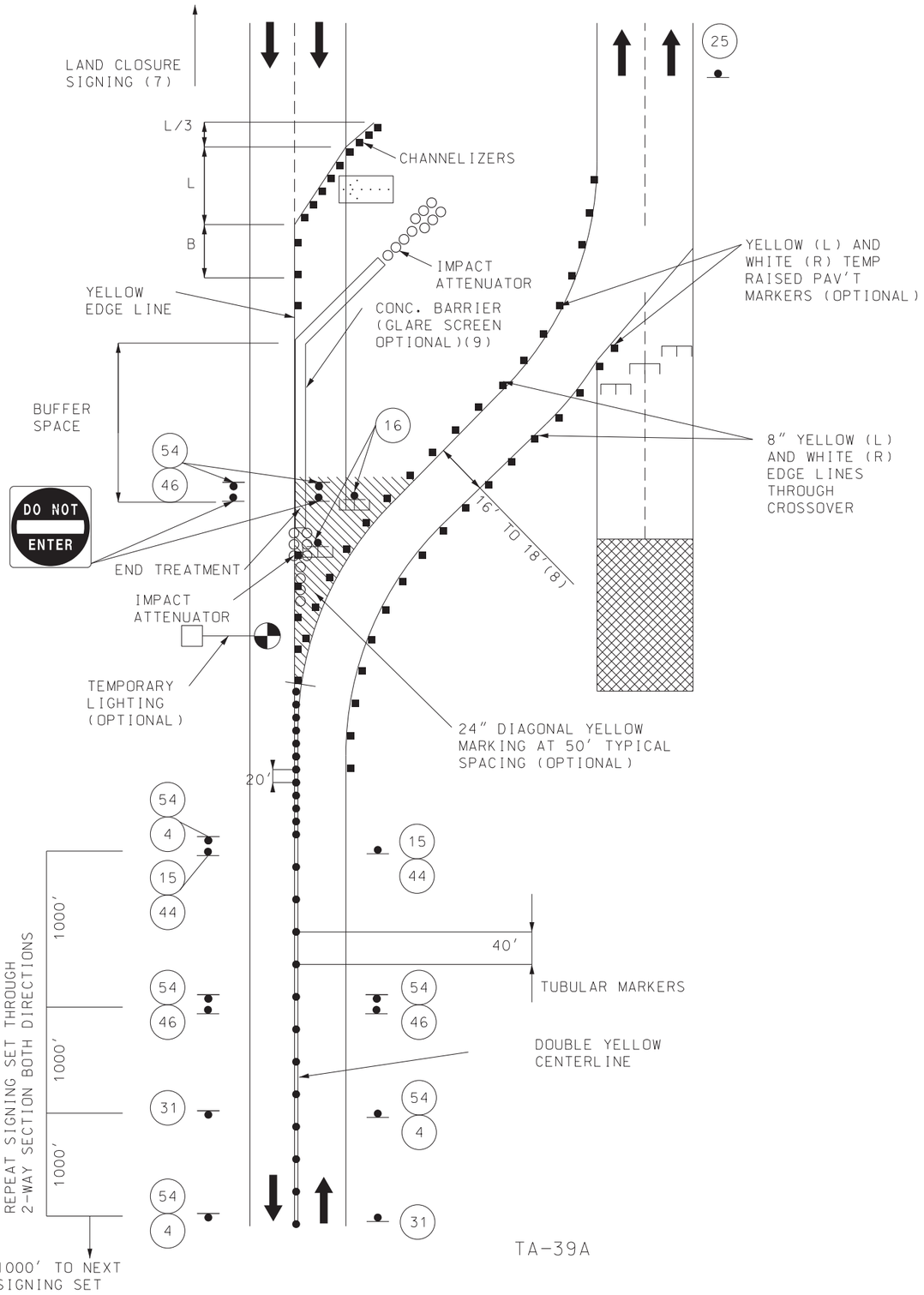

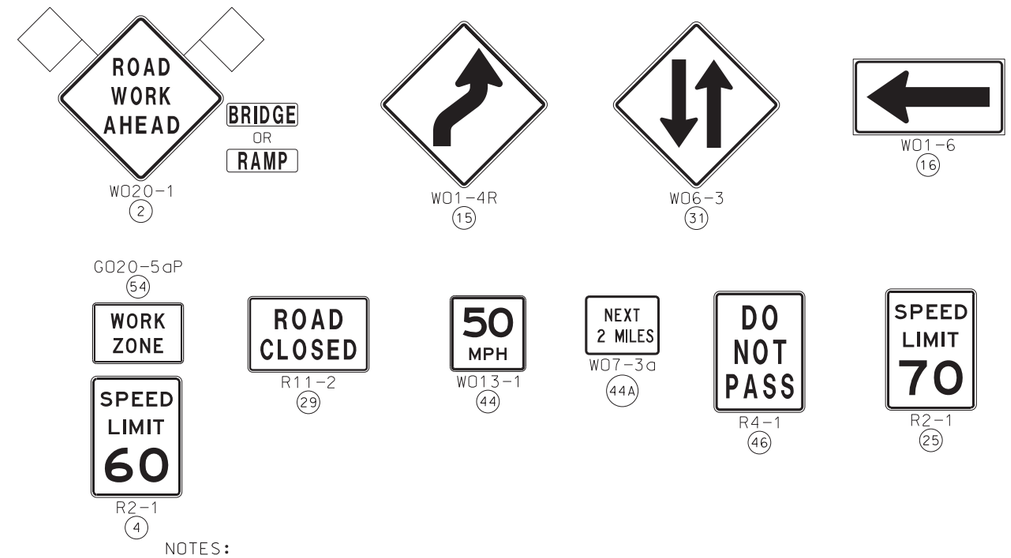

NOTES:

(1) SEE TRAFFIC CONTROL SHEET 1 FOR WORK ZONE SPEED LIMIT GUIDELINES.

(2) SEE TRAFFIC CONTROL SHEET 1 FOR SIGN SPACING, DEVICE SPACING AND CHANNELIZING TAPER LENGTHS.

(3) REMOVE AND/OR MODIFY ANY EXISTING PAVEMENT MARKING AS NEEDED.

(4) TEMPORARY PAVEMENT MARKING REQUIRED WITH LONG TERM CLOSURES.

(5) FOR NIGHT TIME OPERATIONS, REVIEW EPG 616.6.83 WARNING LIGHTS FOR USE OF SEQUENTIAL LIGHTS.

(6) REVIEW EPG 616.6.63 CHANNELIZING DEVICES FOR DIFFERENT TYPES AND GUIDELINES FOR THE DEVICES.

(7) ADVANCED LANE CLOSURE SIGNING IS AS SHOWN ON EPG TA-34, LANE CLOSURE WITH A TEMPORARY TRAFFIC BARRIER.

(8) CROSSOVER PAVEMENT WIDTH MAY BE WIDER AS NEEDED.

(9) FLARE BARRIER TO EXTEND BEYOND CLEAR ZONE OR FLARE BARRIER TO EDGE LINE AND USE APPROVED END TREATMENT.

(10) SEE STANDARD PLAN 616.10 FOR ADDITIONAL INFORMATION.

FOR FLAGS AND ADVANCE WARNING RAIL SYSTEMS, REFER TO EPG 616.6.2.2 FLAGS AND ADVANCED WARNING RAIL SYSTEM

TRAFFIC CONTROL
MEDIAN CROSSOVER
DIVIDED HIGHWAY
SHEET 6 OF 16

STATE OF MISSOURI
EARL HARRISON, JR.
NUMBER
E-2003019813
REGISTERED PROFESSIONAL ENGINEER

THIS SHEET HAS BEEN SIGNED, SEALED AND DATED ELECTRONICALLY.

DATE PREPARED	
8/3/2020	
ROUTE	STATE
I-49	MO
DISTRICT	SHEET NO.
SW	12
COUNTY	
VERNON	
JOB NO.	
J7I3363	
CONTRACT ID.	
PROJECT NO.	
BRIDGE NO.	

DESCRIPTION	DATE

MISSOURI HIGHWAYS AND TRANSPORTATION COMMISSION
105 WEST CAPITOL
JEFFERSON CITY, MO 65102
1-888-ASK-MODOT (1-888-275-6636)

Hg Consult Inc engineers planners

Hg CONSULT, INC.
PRO. ENGINEER 2010005873

EARL HARRISON, JR.
PROFESSIONAL ENGINEER
E-2003019813

REV.

G:\My Drive\Hg Projects\2018\18.077 Vernon County Bridge (HW LOCHNER)\Civil\Sheet_Files\Traffic Control\012_TC_06_J7I3363_I1_I49_TA-39_02.dgn 1:22:22 PM 8/3/2020

J7S3363, I-49 SOUTHBOUND OVER UP RR
STAGED CONSTRUCTION WRITEUP

PHASE 1

CONSTRUCTION:
CONSTRUCT TEMPORARY CROSSOVERS NORTH AND SOUTH OF EXISTING BRIDGE A1343.
REMOVE EXISTING SHOULDERS AT TEMPORARY CROSSOVER LOCATIONS.
INSTALL GUARDRAIL/CET ON I-49 NB BRIDGE ENDS FOR PHASE 2 TRAFFIC.

TRAFFIC CONTROL:
CLOSE MEDIAN LANES OF I-49 SOUTHBOUND AND NORTHBOUND LANES WITH CHANNELIZERS.
I-49 SOUTHBOUND AND NORTHBOUND TO OPERATE WITH ONE LANE EACH DIRECTION.

PHASE 2

CONSTRUCTION:
REMOVE EXIST. BRIDGE A1343 AND CONSTRUCT BRIDGE A8806 AND APPROACHES.

TRAFFIC CONTROL:
CLOSE OUTSIDE SOUTHBOUND LANE AND MEDIAN NORTHBOUND LANE OF I-49 IN ADVANCE OF BRIDGE A1343.
UTILIZE TEMPORARY CROSSOVERS CONSTRUCTED IN PHASE 1 TO CROSS SOUTHBOUND I-49
TO THE NORTHBOUND LANES.
OPERATE TWO-LANE TWO-WAY OPERATIONS (ONE LANE IN EACH DIRECTION) ON THE I-49 NORTHBOUND LANES
SEPARATED BY TUBULAR MARKERS.

TRAFFIC CONTROL
STAGE WRITEUP
SHEET 7 OF 16

STATE OF MISSOURI
EARL HARRISON, JR.
NUMBER
E-2003019813
REGISTERED PROFESSIONAL ENGINEER

THIS SHEET HAS BEEN SIGNED, SEALED AND DATED ELECTRONICALLY.

DATE PREPARED	8/3/2020
ROUTE	I-49
STATE	MO
DISTRICT	SW
SHEET NO.	13
COUNTY	VERNON
JOB NO.	J7I3363
CONTRACT ID.	
PROJECT NO.	
BRIDGE NO.	

DATE	DESCRIPTION

MISSOURI HIGHWAYS AND TRANSPORTATION COMMISSION
105 WEST CAPITOL
JEFFERSON CITY, MO 65102
1-888-ASK-MODOT (1-888-275-6636)

Hg Consult Inc engineers planners

Hg CONSULT, INC.
PRO. ENGINEER 2010005873

EARL HARRISON, JR.
PROFESSIONAL
ENGINEER
E-2003019813

REV.

TRAFFIC CONTROL LEGEND

- SIGN (SINGLE SIDED)
- SIGN (DOUBLE SIDED)
- FLAGGER
- DIRECTIONAL INDICATOR BARRICADES (DIB) W/ LIGHTS
- CHANNELIZER
- TYPE 3 BARRICADE
- CHANGEABLE MESSAGE BOARD
- TEMP. LONG TERM RUMBLE STRIPS

PHASE 1 CONSTRUCTION:
CONSTRUCT TEMPORARY CROSSOVERS.

PHASE 1 TRAFFIC CONTROL:
PERFORM OFF PEAK INSIDE LANE CLOSURES FOR NB AND SB I-49.

SCALE
0 100 200 300 400 500

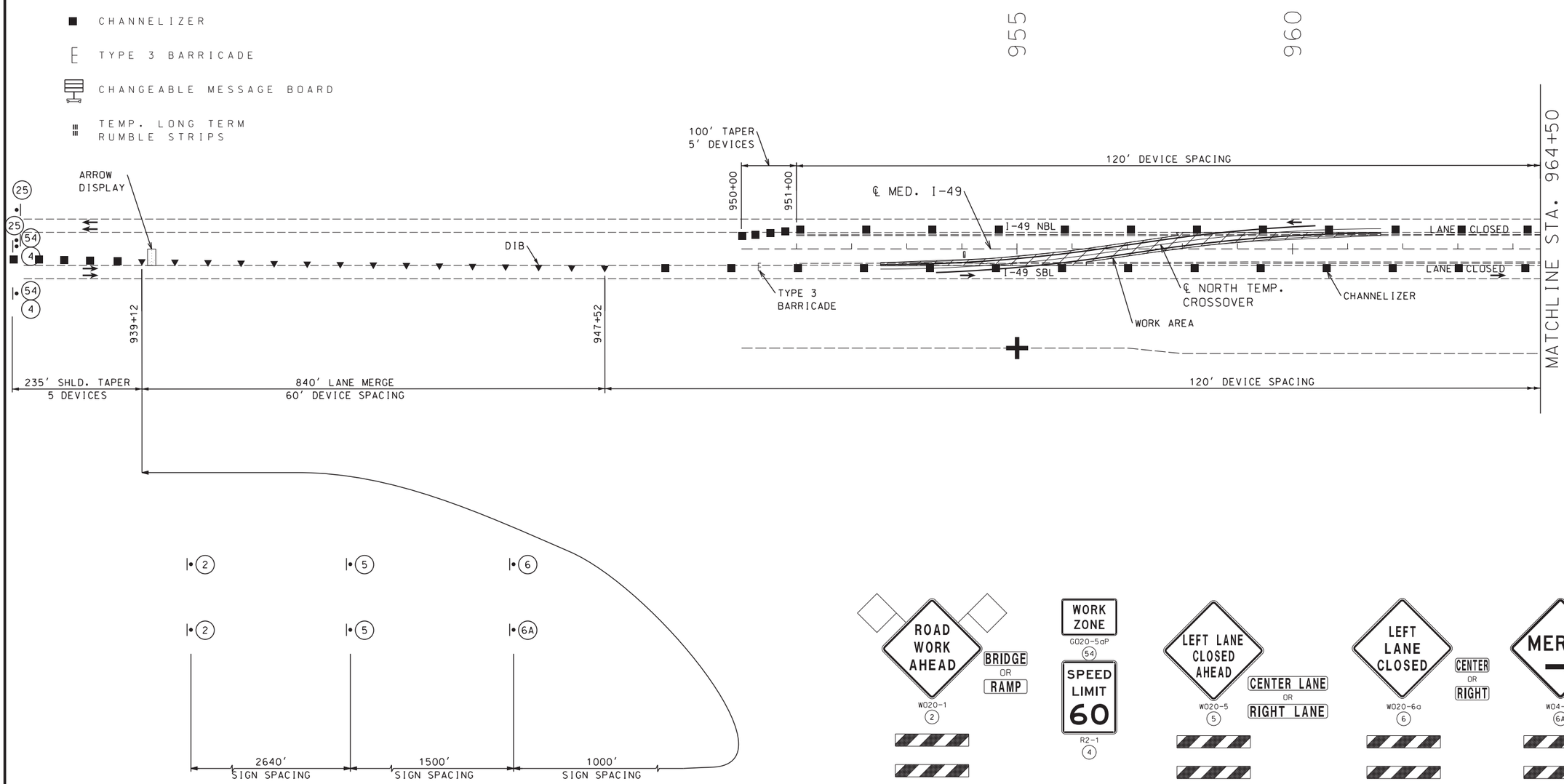

TRAFFIC CONTROL
PHASE 1
SHEET 8 OF 16

STATE OF MISSOURI
EARL HARRISON, JR.
NUMBER E-2003019813
REGISTERED PROFESSIONAL ENGINEER

THIS SHEET HAS BEEN SIGNED, SEALED AND DATED ELECTRONICALLY.

DATE PREPARED	
8/3/2020	
ROUTE	STATE
I-49	MO
DISTRICT	SHEET NO.
SW	14
COUNTY	
VERNON	
JOB NO.	
J7I3363	
CONTRACT ID.	
PROJECT NO.	
BRIDGE NO.	

DATE	DESCRIPTION

MISSOURI HIGHWAYS AND TRANSPORTATION COMMISSION
105 WEST CAPITOL
JEFFERSON CITY, MO 65102
1-888-ASK-MODOT (1-888-275-6636)

Hg Consult Inc engineers planners

Hg CONSULT, INC.
PRO. ENGINEER 2010005873

EARL HARRISON, JR.
PROFESSIONAL ENGINEER
E-2003019813

REV.

G:\My Drive\Hg Projects\2018\18.077 Vernon County Bridge (HW LOCHNER)\Civil\Sheet_Files\Traffic Control\014_TC_08_J7I3363_i100_I49_Ph1_01.dgn 1:22:27 PM 8/3/2020

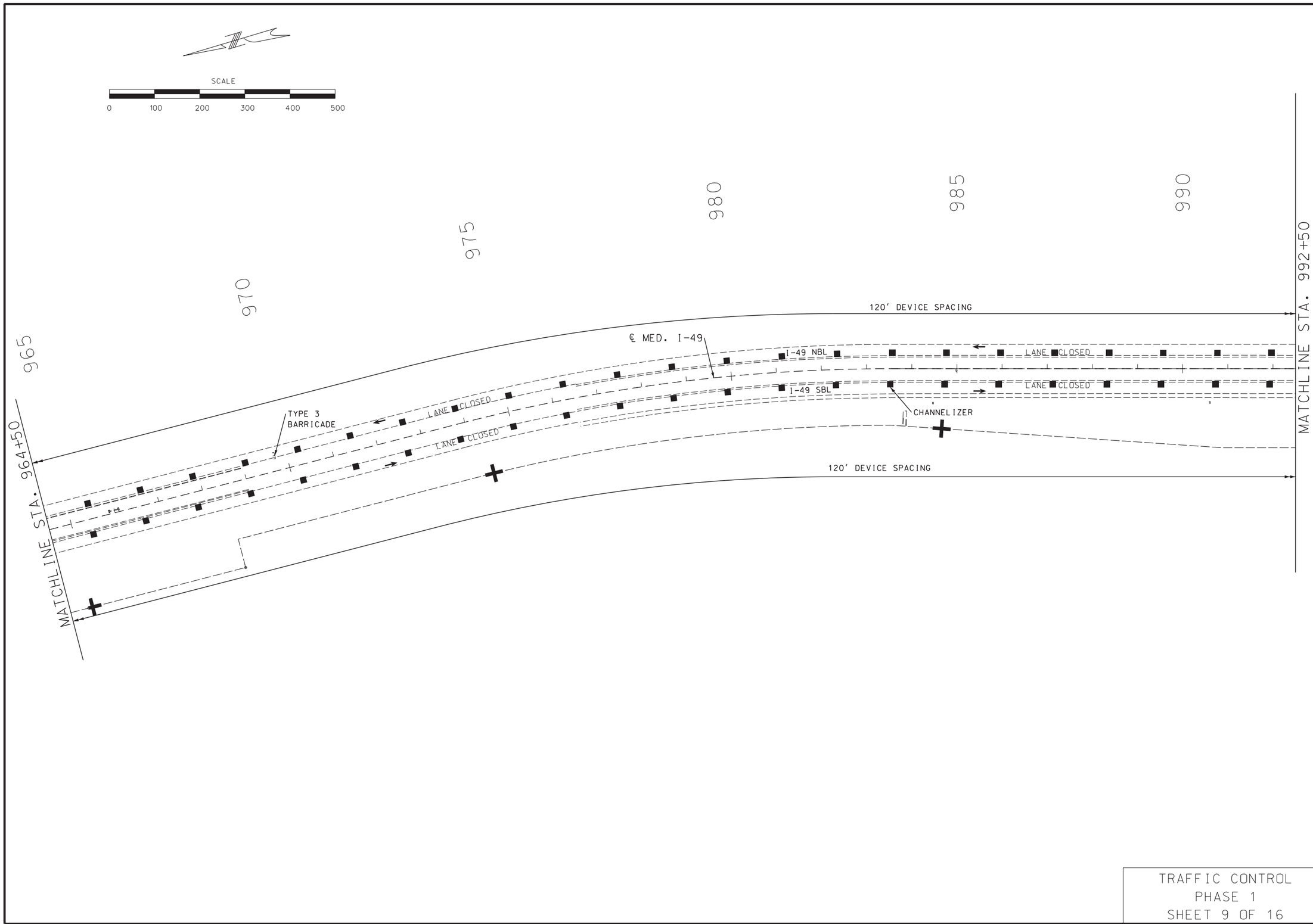

TRAFFIC CONTROL
PHASE 1
SHEET 9 OF 16

STATE OF MISSOURI
EARL HARRISON, JR.
NUMBER
E-2003019813
REGISTERED PROFESSIONAL ENGINEER

THIS SHEET HAS BEEN SIGNED, SEALED AND DATED ELECTRONICALLY.

DATE PREPARED	8/3/2020
ROUTE	I-49
STATE	MO
DISTRICT	SW
SHEET NO.	15
COUNTY	VERNON
JOB NO.	J7I3363
CONTRACT ID.	
PROJECT NO.	
BRIDGE NO.	

DESCRIPTION

DATE

MISSOURI HIGHWAYS AND TRANSPORTATION COMMISSION
105 WEST CAPITOL
JEFFERSON CITY, MO 65102
1-888-ASK-MODOT (1-888-275-6636)

Hg Consult inc engineers planners

Hg CONSULT, INC.
PRO. ENGINEER 2010005873

EARL HARRISON, JR.
PROFESSIONAL
ENGINEER
E-2003019813

REV.

G:\My Drive\Hg Projects\2018\18.077 Vernon County Bridge (HW LOCHNER)\Civil\Sheet_Files\Traffic Control\015_TC_09_J7I3363_i100_I49_Ph1_02.dgn 1:22:29 PM 8/3/2020

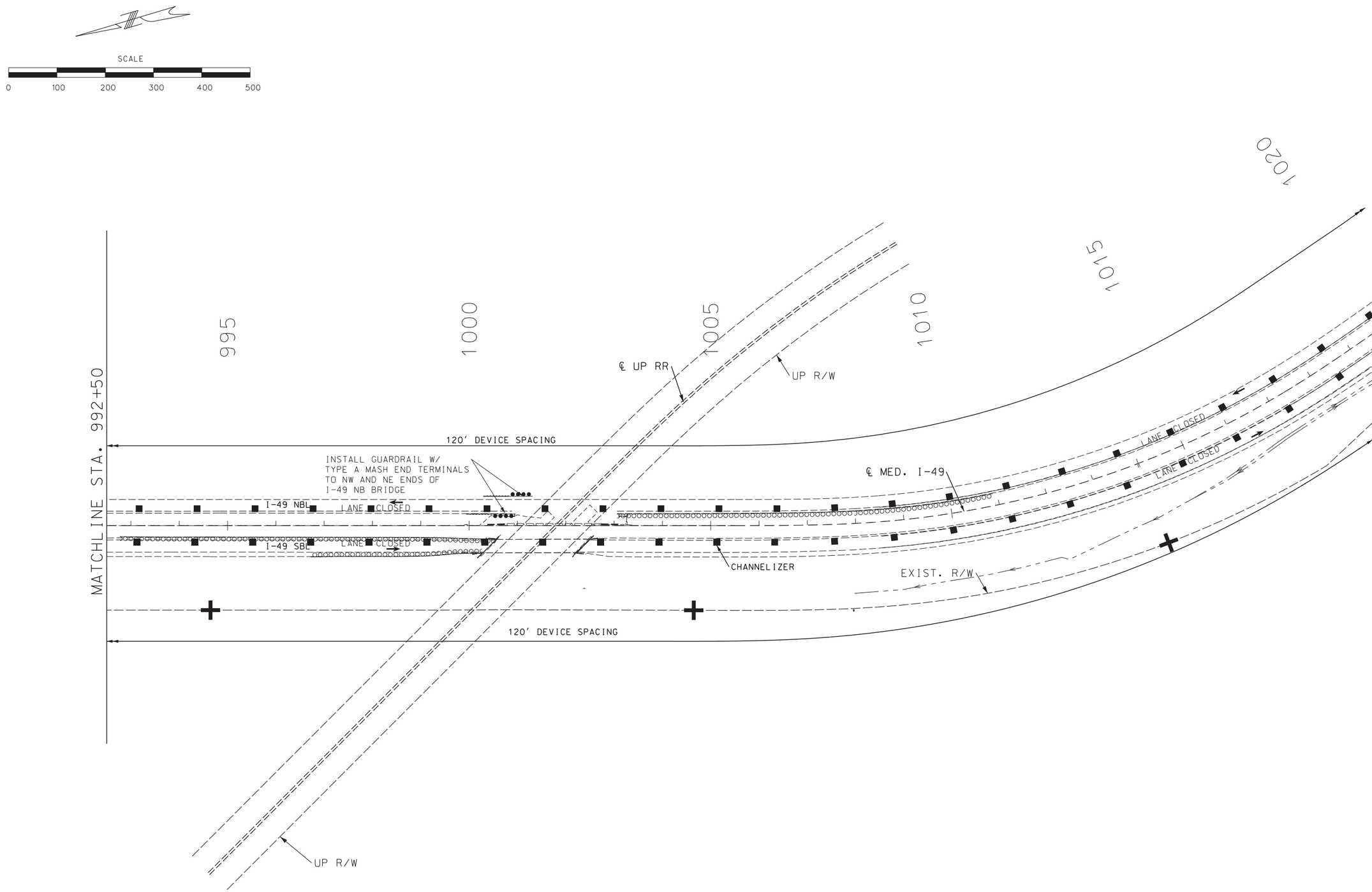

TRAFFIC CONTROL
PHASE 1
SHEET 10 OF 16

STATE OF MISSOURI
EARL HARRISON, JR.
NUMBER
E-2003019813
REGISTERED PROFESSIONAL ENGINEER

THIS SHEET HAS BEEN SIGNED, SEALED AND DATED ELECTRONICALLY.

DATE PREPARED	
8/3/2020	
ROUTE	STATE
I-49	MO
DISTRICT	SHEET NO.
SW	16
COUNTY	
VERNON	
JOB NO.	
J7I3363	
CONTRACT ID.	
PROJECT NO.	
BRIDGE NO.	

DATE	DESCRIPTION

MISSOURI HIGHWAYS AND TRANSPORTATION COMMISSION
105 WEST CAPITOL
JEFFERSON CITY, MO 65102
1-888-ASK-MODOT (1-888-275-6636)

Hg Consult Inc engineers planners

Hg CONSULT, INC.
PRO. ENGINEER 2010005873

EARL HARRISON, JR.
PROFESSIONAL
ENGINEER
E-2003019813

REV.

G:\My Drive\Hg Projects\2018\18.077 Vernon County Bridge (HW LOCHNER)\Civil\Sheet_Files\Traffic Control\016_TC_10_J7I3363_i100_I49_Ph1_03.dgn 1:22:35 PM 8/3/2020

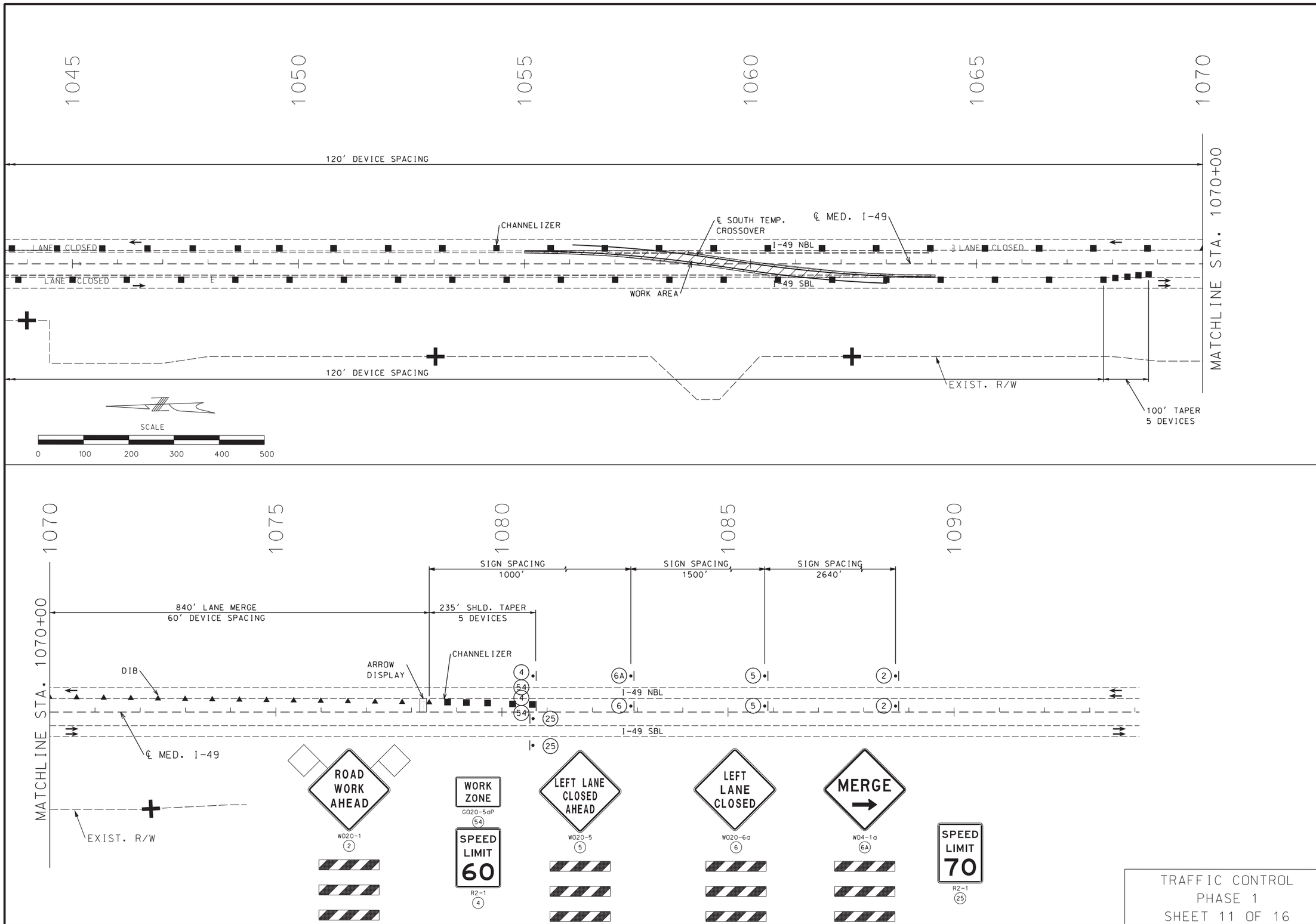

TRAFFIC CONTROL
PHASE 1
SHEET 11 OF 16

STATE OF MISSOURI
EARL HARRISON, JR.
NUMBER
2003019813
REGISTERED PROFESSIONAL ENGINEER

THIS SHEET HAS BEEN SIGNED, SEALED AND DATED ELECTRONICALLY.

DATE PREPARED	
8/3/2020	
ROUTE	STATE
I-49	MO
DISTRICT	SHEET NO.
SW	17
COUNTY	
VERNON	
JOB NO.	
J7I3363	
CONTRACT ID.	
PROJECT NO.	
BRIDGE NO.	

DESCRIPTION	DATE

MISSOURI HIGHWAYS AND TRANSPORTATION COMMISSION
105 WEST CAPITOL
JEFFERSON CITY, MO 65102
1-888-ASK-MODOT (1-888-275-6636)

Hg Consult Inc engineers planners

Hg CONSULT, INC.
PRO. ENGINEER 2010005873

EARL HARRISON, JR.
PROFESSIONAL ENGINEER
E-2003019813

REV.

G:\My Drive\Hg Projects\2018\18.077 Vernon County Bridge (HW LOCHNER)\Civil\Sheet_Files\Traffic Control\017_TC_11_J7I3363_i100_I49_Ph1_04.dgn 1:22:40 PM 8/3/2020

NORTH TEMP. CROSSOVER
PI 2+02.84
PC 0+00.00
PT 4+04.97
Δ 8° 15' 47.6" (LT)
D 2° 02' 25.6"
L 404.97'
T 202.84'
R 2,808.00'
S.E. 4% MAX.

NORTH TEMP. CROSSOVER
PI 7+10.14
PC 5+07.31
PT 9+12.26
Δ 8° 15' 45.6" (RT)
D 2° 02' 25.6"
L 404.94'
T 202.82'
R 2,808.00'
S.E. 4% MAX.

SCALE
0 50 100 150 200 250

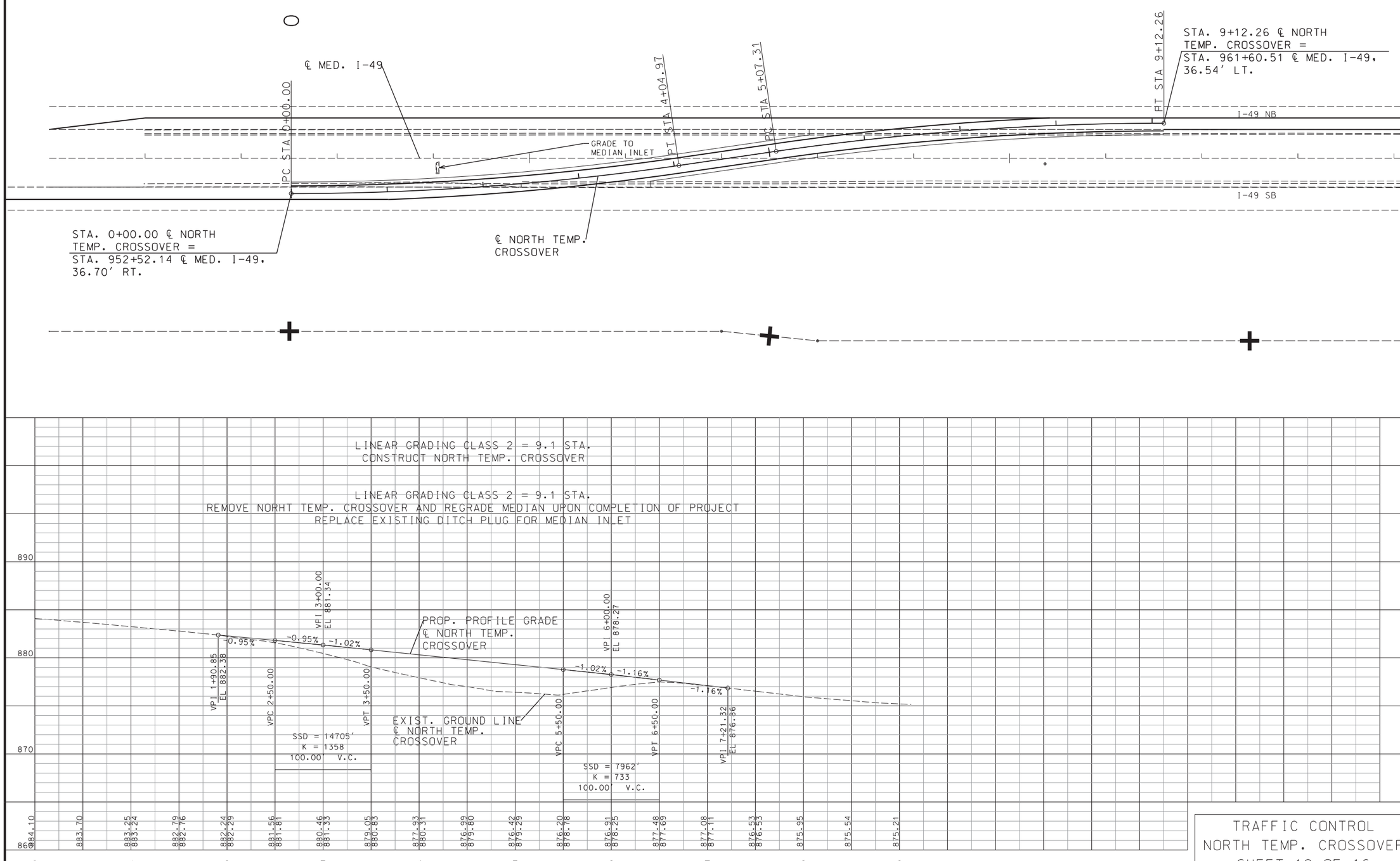

TRAFFIC CONTROL
NORTH TEMP. CROSSOVER
SHEET 12 OF 16

STATE OF MISSOURI
EARL HARRISON, JR.
NUMBER E-2003019813
REGISTERED PROFESSIONAL ENGINEER

THIS SHEET HAS BEEN SIGNED, SEALED AND DATED ELECTRONICALLY.

DATE PREPARED	
8/3/2020	
ROUTE	STATE
I-49	MO
DISTRICT	SHEET NO.
SW	18
COUNTY	
VERNON	
JOB NO.	
J7I3363	
CONTRACT ID.	
PROJECT NO.	
BRIDGE NO.	

DESCRIPTION	DATE

MISSOURI HIGHWAYS AND TRANSPORTATION COMMISSION
105 WEST CAPITOL
JEFFERSON CITY, MO 65102
1-888-ASK-MODOT (1-888-275-6636)

Hg Consult Inc engineers planners

Hg CONSULT, INC.
PRO. ENGINEER 2010005873

EARL HARRISON, JR.
PROFESSIONAL ENGINEER
E-2003019813

REV.

G:\My Drive\Hg Projects\2018\18.077 Vernon County Bridge (HW LOCHNER)\Civil\Sheet_Files\Traffic Control\018_TC_12_J7I3363_i50_I49_NTXO.dgn 1:22:43 PM 8/3/2020

SOUTH TEMP. CROSSOVER
PI 2+02.76
PC 0+00.00
PT 4+04.83
Δ 8° 15′ 37.0″ (RT)
D 2° 02′ 25.6″
L 404.83′
T 202.76′
R 2,808.00′
S.E. 4% MAX.

SOUTH TEMP. CROSSOVER
PI 7+09.79
PC 5+07.14
PT 9+11.74
Δ 8° 15′ 20.7″ (LT)
D 2° 02′ 25.6″
L 404.60′
T 202.65′
R 2,808.00′
S.E. 4% MAX.

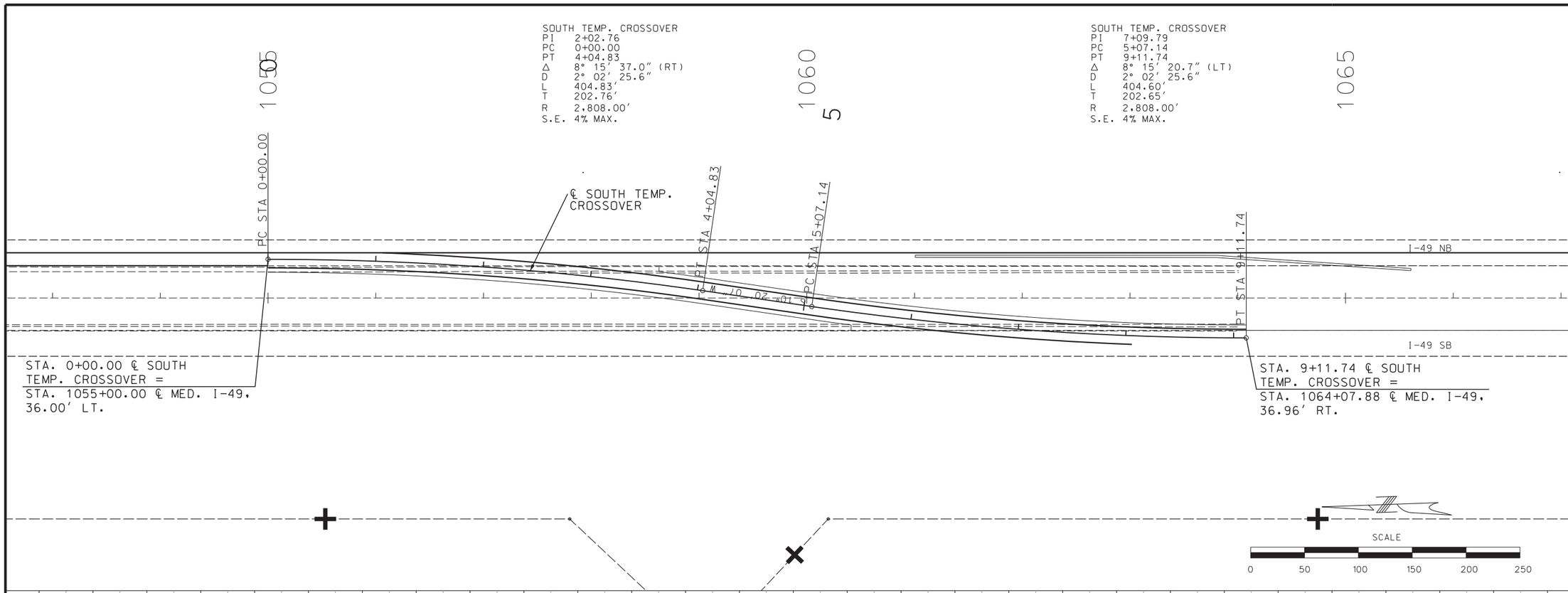

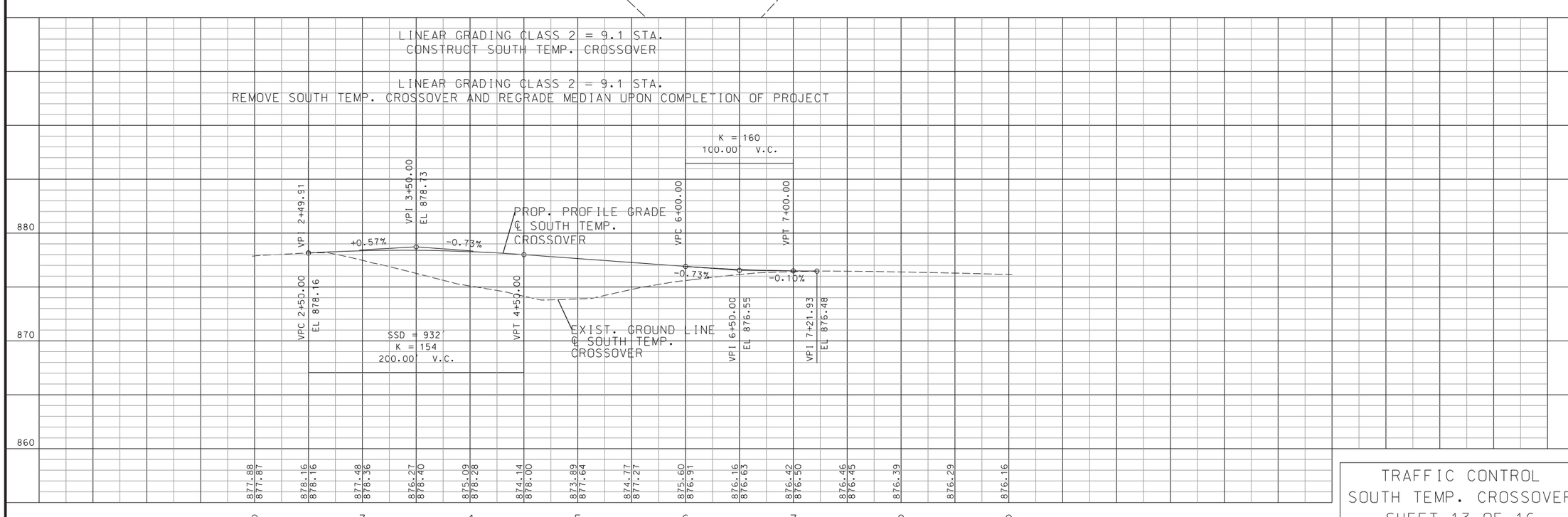

TRAFFIC CONTROL
SOUTH TEMP. CROSSOVER
SHEET 13 OF 16

STATE OF MISSOURI
EARL HARRISON, JR.
NUMBER E-2003019813
REGISTERED PROFESSIONAL ENGINEER

THIS SHEET HAS BEEN SIGNED, SEALED AND DATED ELECTRONICALLY.

DATE PREPARED	
8/3/2020	
ROUTE	STATE
I-49	MO
DISTRICT	SHEET NO.
SW	19
COUNTY	
VERNON	
JOB NO.	
J7I3363	
CONTRACT ID.	
PROJECT NO.	
BRIDGE NO.	

DESCRIPTION	DATE

MISSOURI HIGHWAYS AND TRANSPORTATION COMMISSION
105 WEST CAPITOL
JEFFERSON CITY, MO 65102
1-888-ASK-MODOT (1-888-275-6636)

Hg Consult Inc engineers planners

Hg CONSULT, INC.
PRO. ENGINEER 2010005873

EARL HARRISON, JR.
PROFESSIONAL ENGINEER
E-2003019813

REV.

G:\My Drive\Hg Projects\2018\18.077 Vernon County Bridge (HW LOCHNER)\Civil\Sheet_Files\Traffic Control\019_TC_13_J7I3363_I50_I49_STXO.dgn 1:22:44 PM 8/3/2020

PHASE 2 CONSTRUCTION:
CONSTRUCT BRIDGE A8806 AND MAINLINE APPROACHES.

PHASE 2 TRAFFIC CONTROL:
UTILIZE TEMPORARY CROSSOVERS FOR SB I-49 TRAFFIC.
MAINTAIN TWO LANE TWO WAY TRAFFIC (HEAD TO HEAD)
ON NB I-49 LANES.

SCALE
0 100 200 300 400 500

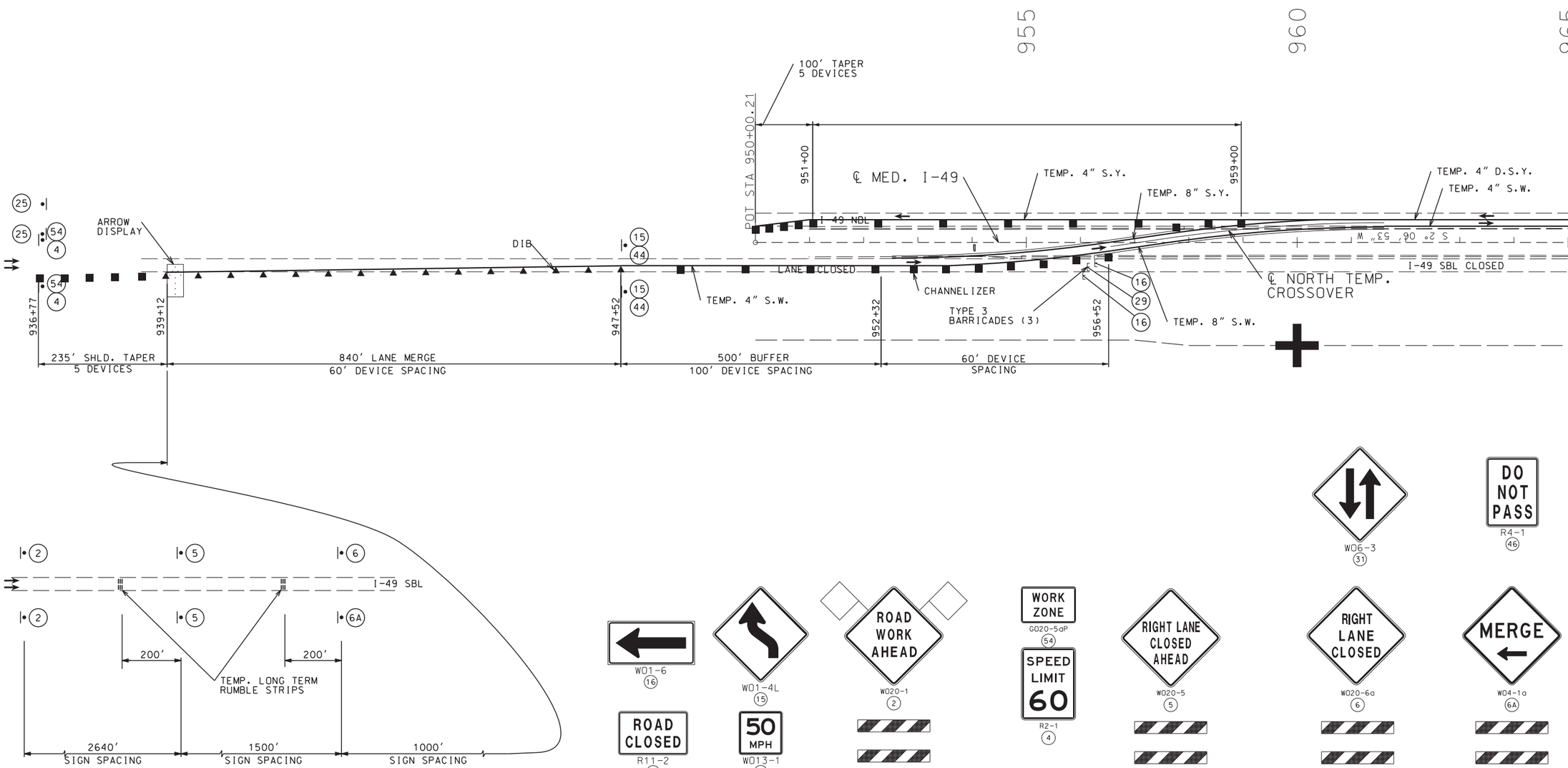

TRAFFIC CONTROL
PHASE 2
SHEET 14 OF 16

STATE OF MISSOURI
EARL HARRISON, JR.
NUMBER
2003019813
REGISTERED PROFESSIONAL ENGINEER

THIS SHEET HAS BEEN SIGNED, SEALED AND DATED ELECTRONICALLY.

DATE PREPARED	8/3/2020
ROUTE	I-49
STATE	MO
DISTRICT	SW
SHEET NO.	20
COUNTY	VERNON
JOB NO.	J7I3363
CONTRACT ID.	
PROJECT NO.	
BRIDGE NO.	

DESCRIPTION
DATE

MISSOURI HIGHWAYS AND TRANSPORTATION COMMISSION
105 WEST CAPITOL
JEFFERSON CITY, MO 65102
1-888-ASK-MODOT (1-888-275-6636)

Hg Consult Inc engineers planners

Hg CONSULT, INC.
PRO. ENGINEER 2010005873

EARL HARRISON, JR.
PROFESSIONAL ENGINEER
E-2003019813

REV.

G:\My Drive\Hg Projects\2018\18.077 Vernon County Bridge (HW LOCHNER)\Civil\Sheet_Files\Traffic Control\020_TC_14_J7I3363_i100_I49_Ph2_01.dgn 1:22:46 PM 8/3/2020

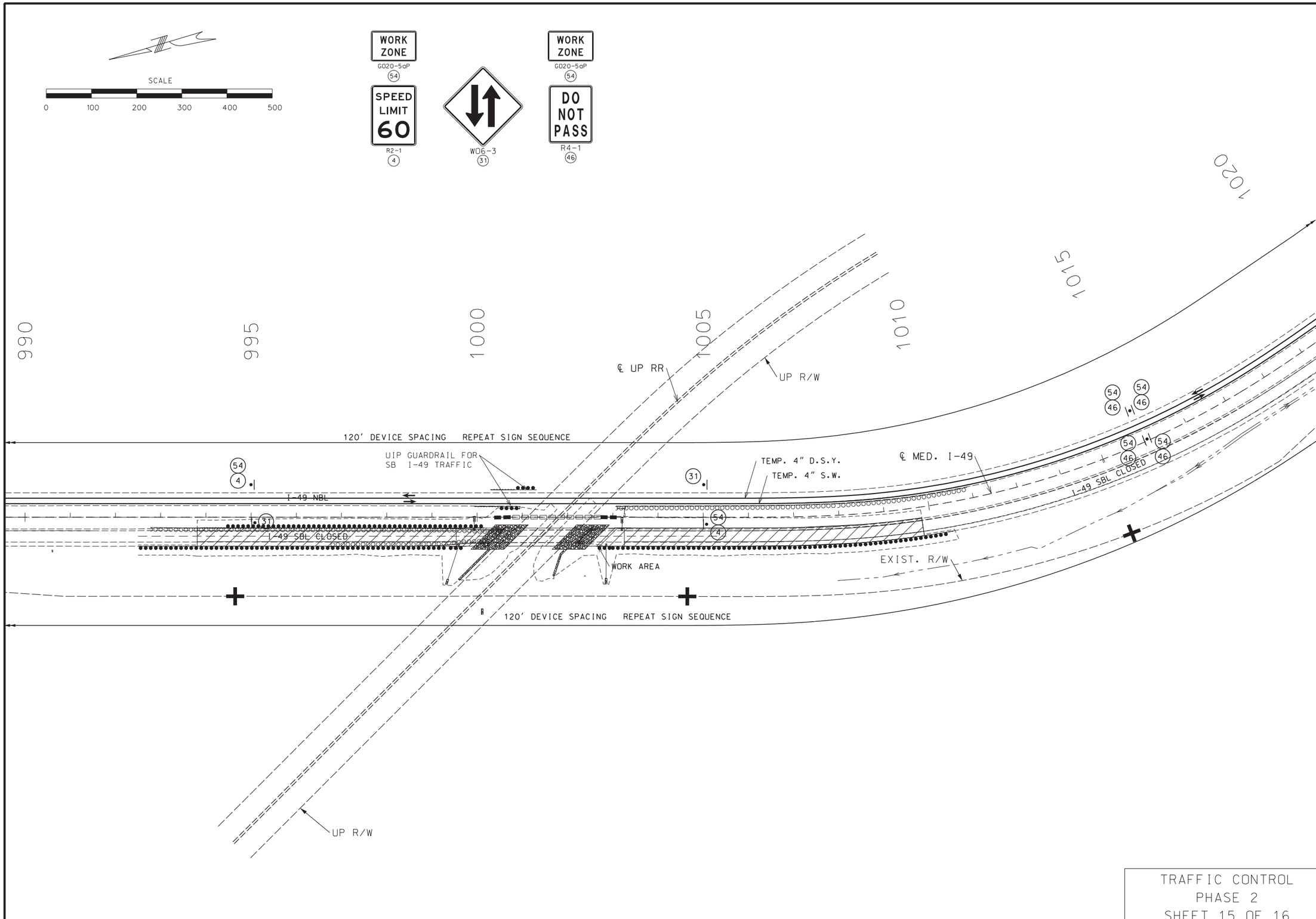

TRAFFIC CONTROL
PHASE 2
SHEET 15 OF 16

STATE OF MISSOURI
EARL HARRISON, JR.
NUMBER
E-2003019813
REGISTERED PROFESSIONAL ENGINEER

THIS SHEET HAS BEEN SIGNED, SEALED AND DATED ELECTRONICALLY.

DATE PREPARED	
8/3/2020	
ROUTE	STATE
I-49	MO
DISTRICT	SHEET NO.
SW	21
COUNTY	
VERNON	
JOB NO.	
J7I3363	
CONTRACT ID.	
PROJECT NO.	
BRIDGE NO.	

DATE	DESCRIPTION

MISSOURI HIGHWAYS AND TRANSPORTATION COMMISSION
105 WEST CAPITOL
JEFFERSON CITY, MO 65102
1-888-ASK-MODOT (1-888-275-6636)

Hg Consult Inc engineers planners

Hg CONSULT, INC.
PRO. ENGINEER 2010005873

EARL HARRISON, JR.
PROFESSIONAL ENGINEER
E-2003019813

REV.

G:\My Drive\Hg Projects\2018\18.077 Vernon County Bridge (HW LOCHNER)\Civil\Sheet_Files\Traffic Control\021_TC_15_J7I3363_i100_I49_Ph2_02.dgn 1:22:48 PM 8/3/2020

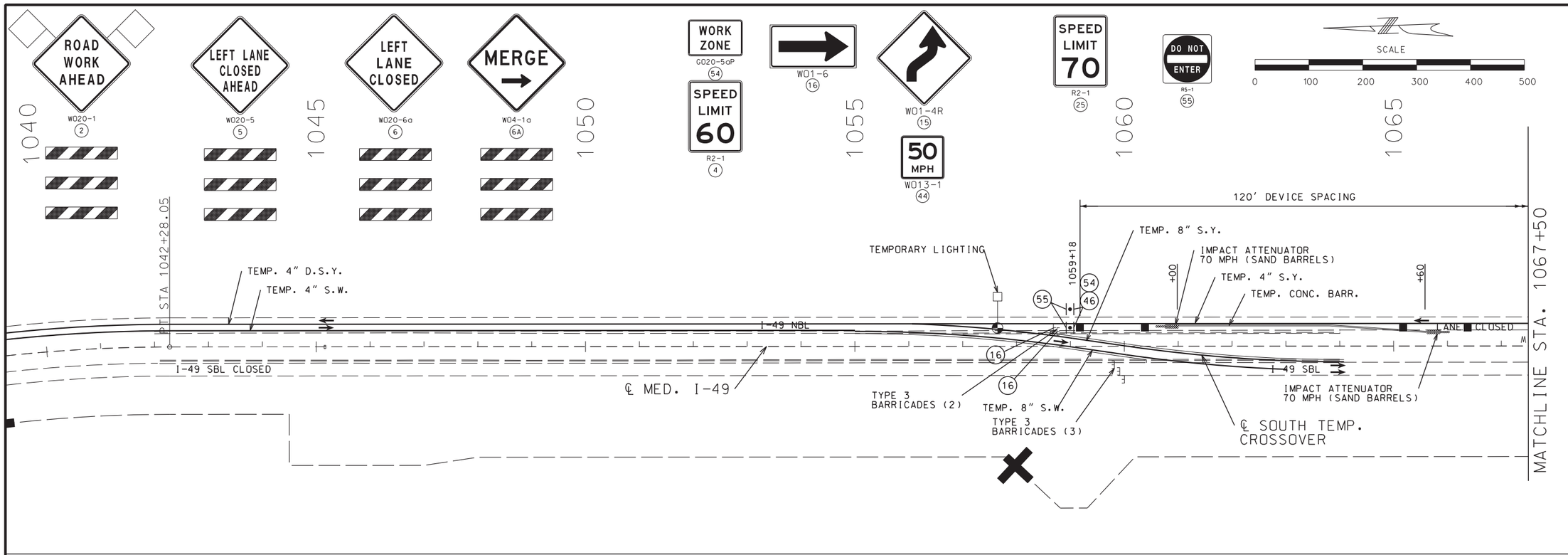

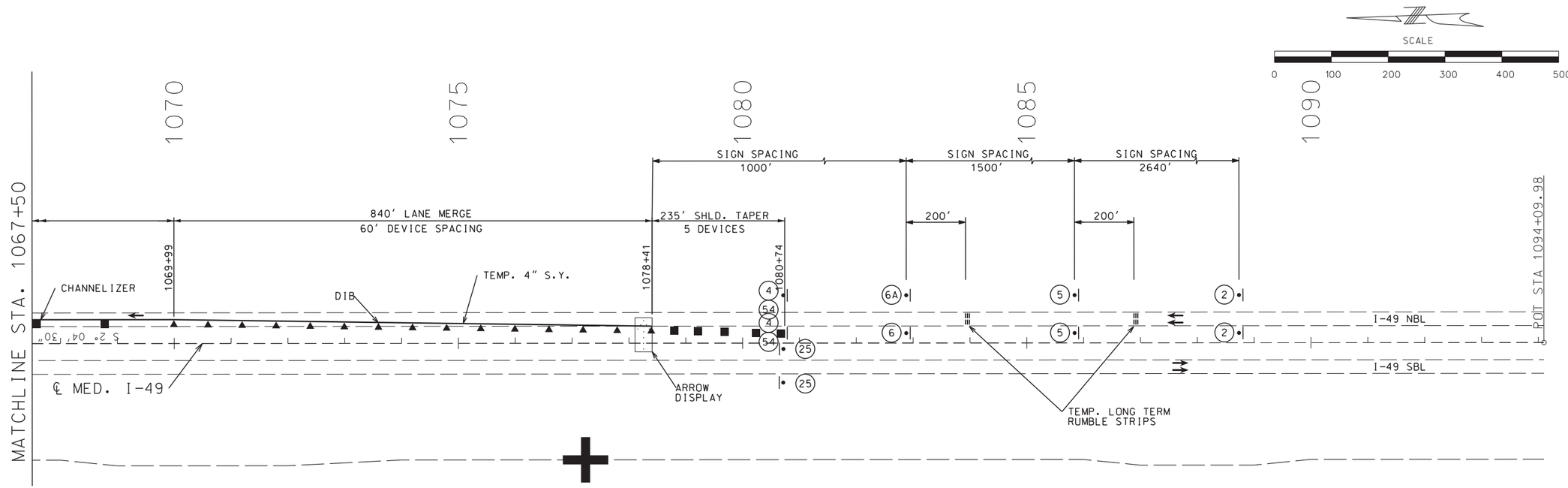

TRAFFIC CONTROL
PHASE 2
SHEET 16 OF 16

STATE OF MISSOURI
EARL HARRISON, JR.
NUMBER
E-2003019813
REGISTERED PROFESSIONAL ENGINEER

THIS SHEET HAS BEEN SIGNED, SEALED AND DATED ELECTRONICALLY.

DATE PREPARED	8/3/2020
ROUTE	I-49
STATE	MO
DISTRICT	SW
SHEET NO.	22
COUNTY	VERNON
JOB NO.	J7I3363
CONTRACT ID.	
PROJECT NO.	
BRIDGE NO.	

DATE	DESCRIPTION

MISSOURI HIGHWAYS AND TRANSPORTATION COMMISSION
105 WEST CAPITOL
JEFFERSON CITY, MO 65102
1-888-ASK-MODOT (1-888-275-6636)

Hg Consult Inc engineers planners

Hg CONSULT, INC.
PRO. ENGINEER 2010005873

EARL HARRISON, JR.
PROFESSIONAL
ENGINEER
E-2003019813

REV.

G:\My Drive\Hg Projects\2018\18.077 Vernon County Bridge (HW LOCHNER)\Civil\Sheet_Files\Traffic Control\022_TC_16_J7I3363_i100_I49_Ph2_03.dgn 1:22:57 PM 8/3/2020

TEMPORARY EROSION CONTROL LEGEND

ROCK DITCH CHECK

SILT FENCE

SCALE

0 100 200 300 400 500

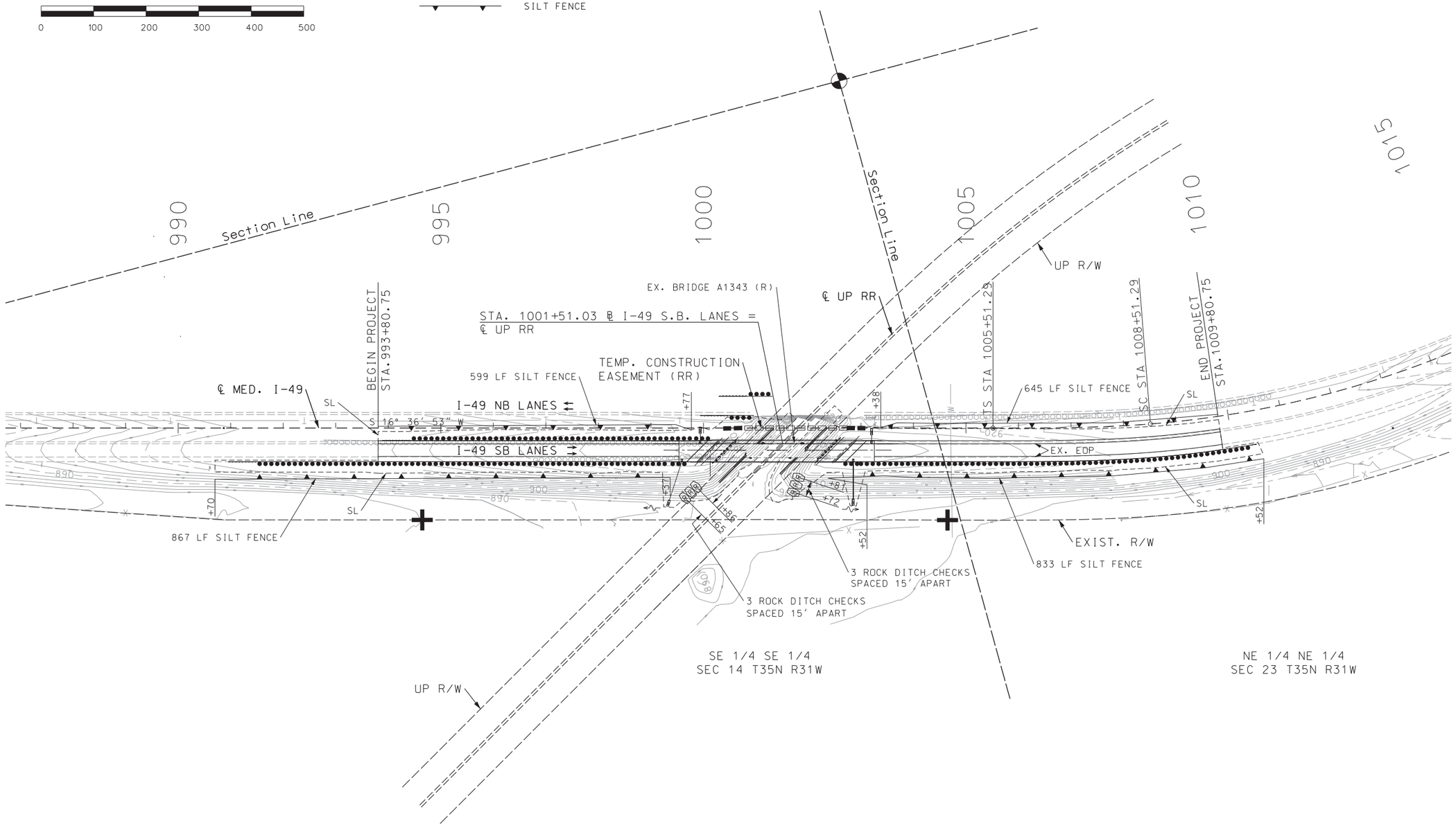

TEMP. EROSION CONTROL
I-49
SHEET 1 OF 1

STATE OF MISSOURI
EARL HARRISON, JR.
NUMBER
E-2003019813
REGISTERED PROFESSIONAL ENGINEER

THIS SHEET HAS BEEN SIGNED, SEALED AND DATED ELECTRONICALLY.

DATE PREPARED	
8/3/2020	
ROUTE	STATE
I-49	MO
DISTRICT	SHEET NO.
SW	23
COUNTY	
VERNON	
JOB NO.	
J7I3363	
CONTRACT ID.	
PROJECT NO.	
BRIDGE NO.	

DATE	DESCRIPTION

MISSOURI HIGHWAYS AND TRANSPORTATION COMMISSION
105 WEST CAPITOL
JEFFERSON CITY, MO 65102
1-888-ASK-MODOT (1-888-275-6636)

Hg Consult Inc engineers planners

Hg CONSULT, INC.
PRO. ENGINEER 2010005873

EARL HARRISON, JR.
PROFESSIONAL
ENGINEER
E-2003019813

REV.

G:\My Drive\Hg Projects\2018\18.077 Vernon County Bridge (HW LOCHNER)\Civil\Sheet_Files\TempErosionControl\023_EC_01_J7I3363_i100_I49.dgn 1:22:58 PM 8/3/2020

NOTES:

INTERMITTENT STRIPING SHALL CONSIST OF 10′ LINE SEGMENTS AND 30′ GAPS.

PAVEMENT MARKING SHALL BE HIGH BUILD PAINT WATERBORNE PAINT WITH TYPE L BEADS.

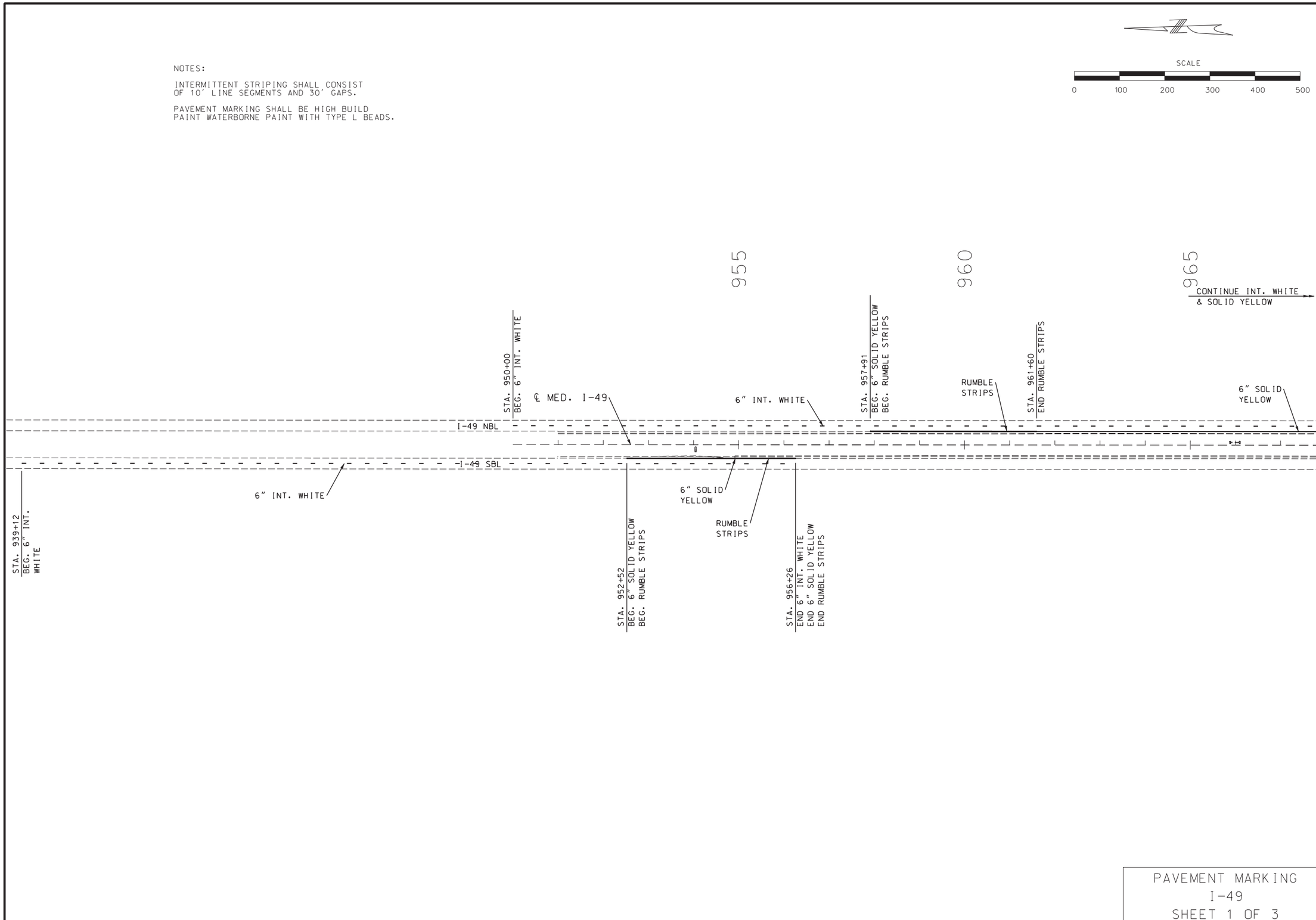

PAVEMENT MARKING
I-49
SHEET 1 OF 3

STATE OF MISSOURI
EARL HARRISON, JR.
NUMBER
2003019813
REGISTERED PROFESSIONAL ENGINEER

THIS SHEET HAS BEEN SIGNED, SEALED AND DATED ELECTRONICALLY.

DATE PREPARED	8/3/2020
ROUTE	I-49
STATE	MO
DISTRICT	SW
SHEET NO.	24
COUNTY	VERNON
JOB NO.	J7I3363
CONTRACT ID.	
PROJECT NO.	
BRIDGE NO.	

DESCRIPTION | DATE

MISSOURI HIGHWAYS AND TRANSPORTATION COMMISSION
105 WEST CAPITOL
JEFFERSON CITY, MO 65102
1-888-ASK-MODOT (1-888-275-6636)

Hg Consult inc engineers planners

Hg CONSULT, INC.
PRO. ENGINEER 2010005873

EARL HARRISON, JR.
PROFESSIONAL ENGINEER
E-2003019813

REV.

G:\My Drive\Hg Projects\2018\18.077 Vernon County Bridge (HW LOCHNER)\Civil\Sheet_Files\PavementMarking\024_PM_01_J7I3363_i100_I49.dgn 1:23:03 PM 8/3/2020

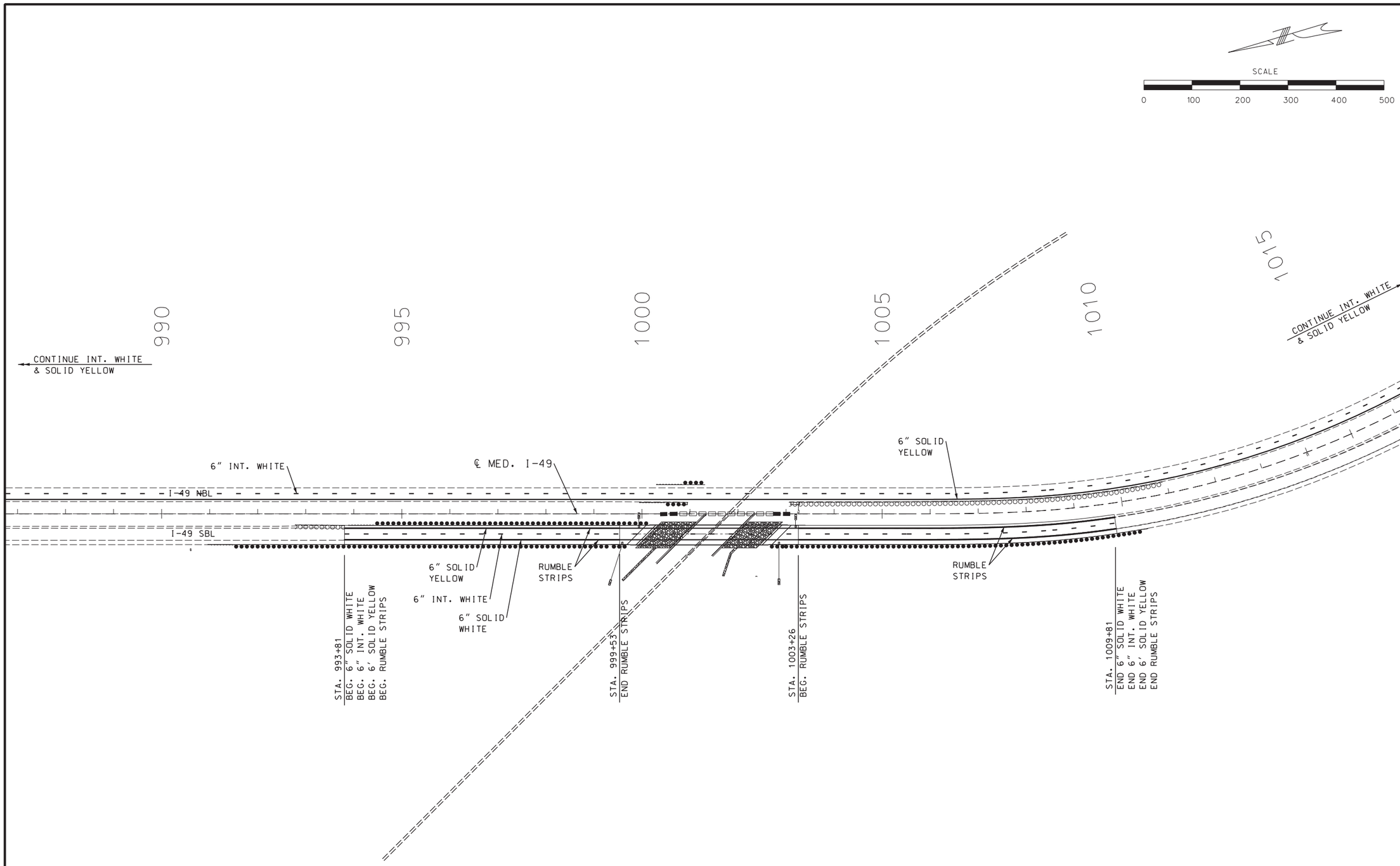

PAVEMENT MARKING
I-49
SHEET 2 OF 3

STATE OF MISSOURI
EARL HARRISON, JR.
NUMBER
E-2003019813
REGISTERED PROFESSIONAL ENGINEER

THIS SHEET HAS BEEN SIGNED, SEALED AND DATED ELECTRONICALLY.

DATE PREPARED	8/3/2020
ROUTE	I-49
STATE	MO
DISTRICT	SW
SHEET NO.	25
COUNTY	VERNON
JOB NO.	J7I3363
CONTRACT ID.	
PROJECT NO.	
BRIDGE NO.	

DATE	DESCRIPTION

MISSOURI HIGHWAYS AND TRANSPORTATION COMMISSION
105 WEST CAPITOL
JEFFERSON CITY, MO 65102
1-888-ASK-MODOT (1-888-275-6636)

Hg Consult Inc engineers planners

Hg CONSULT, INC.
PRO. ENGINEER 2010005873

EARL HARRISON, JR.
PROFESSIONAL ENGINEER
E-2003019813

REV.

G:\My Drive\Hg Projects\2018\18.077 Vernon County Bridge (HW LOCHNER)\Civil\Sheet_Files\PavementMarking\025_PM_02_J7I3363_i100_I49.dgn 1:23:11 PM 8/3/2020

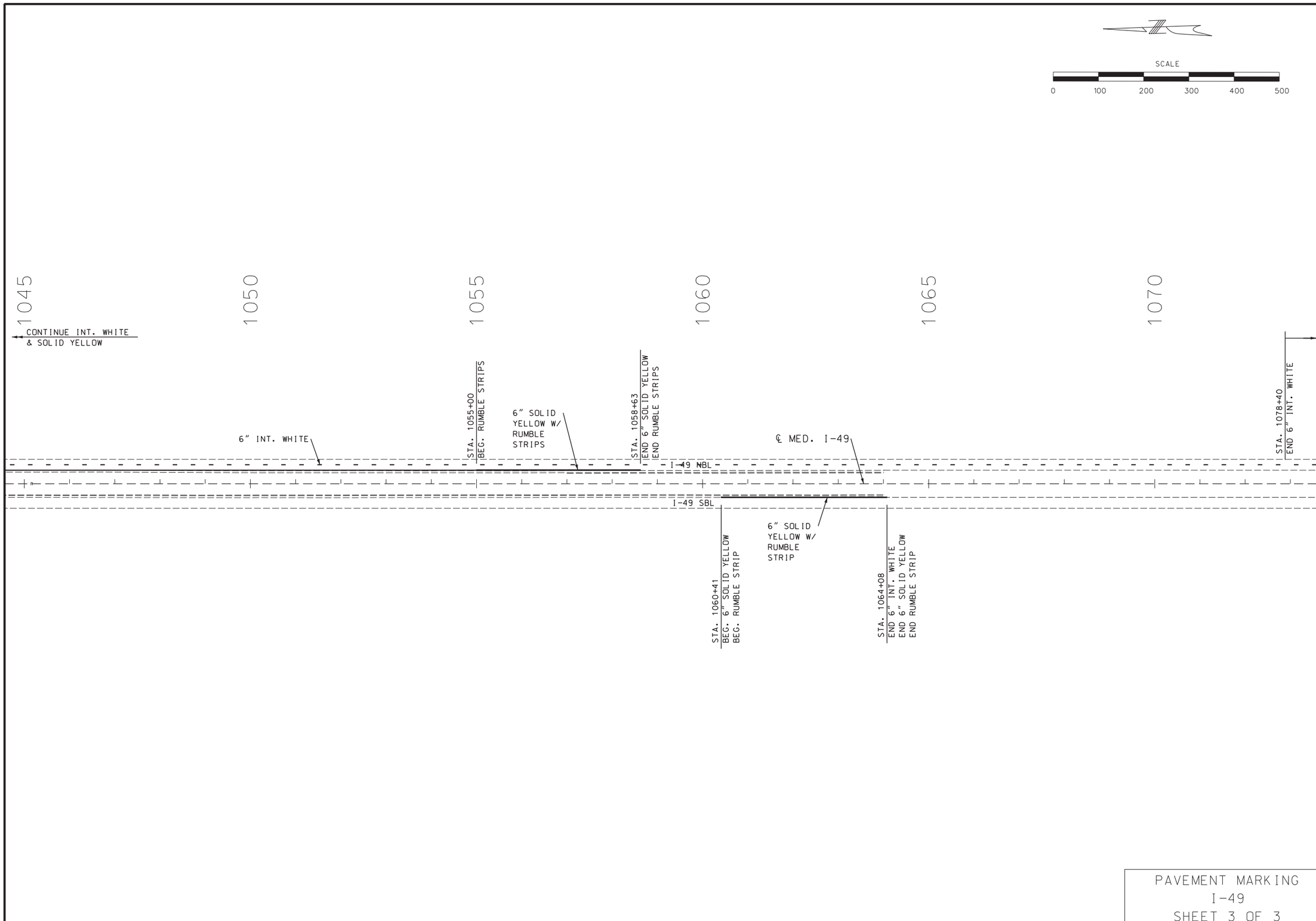

PAVEMENT MARKING
I-49
SHEET 3 OF 3

STATE OF MISSOURI
EARL HARRISON, JR.
NUMBER
2003019813
REGISTERED PROFESSIONAL ENGINEER

THIS SHEET HAS BEEN SIGNED, SEALED AND DATED ELECTRONICALLY.

DATE PREPARED	
8/3/2020	
ROUTE	STATE
I-49	MO
DISTRICT	SHEET NO.
SW	26
COUNTY	
VERNON	
JOB NO.	
J7I3363	
CONTRACT ID.	
PROJECT NO.	
BRIDGE NO.	

DATE	DESCRIPTION

MISSOURI HIGHWAYS AND TRANSPORTATION COMMISSION
105 WEST CAPITOL
JEFFERSON CITY, MO 65102
1-888-ASK-MODOT (1-888-275-6636)

Hg Consult Inc engineers planners

Hg CONSULT, INC.
PRO. ENGINEER 2010005873

EARL HARRISON, JR.
PROFESSIONAL
ENGINEER
E-2003019813

REV.

G:\My Drive\Hg Projects\2018\18.077 Vernon County Bridge (HW LOCHNER)\Civil\Sheet_Files\PavementMarking\026_PM_03_J713363_i100_I49.dgn 1:23:13 PM 8/3/2020

MISSOURI HIGHWAYS AND TRANSPORTATION COMMISSION

(77′ - 103′ - 77′) 43″ PRESTRESSED NU-GIRDER SPANS

(45 DEGREE SKEW LA)

SEC/SUR 14 TWP 35N RGE 31W

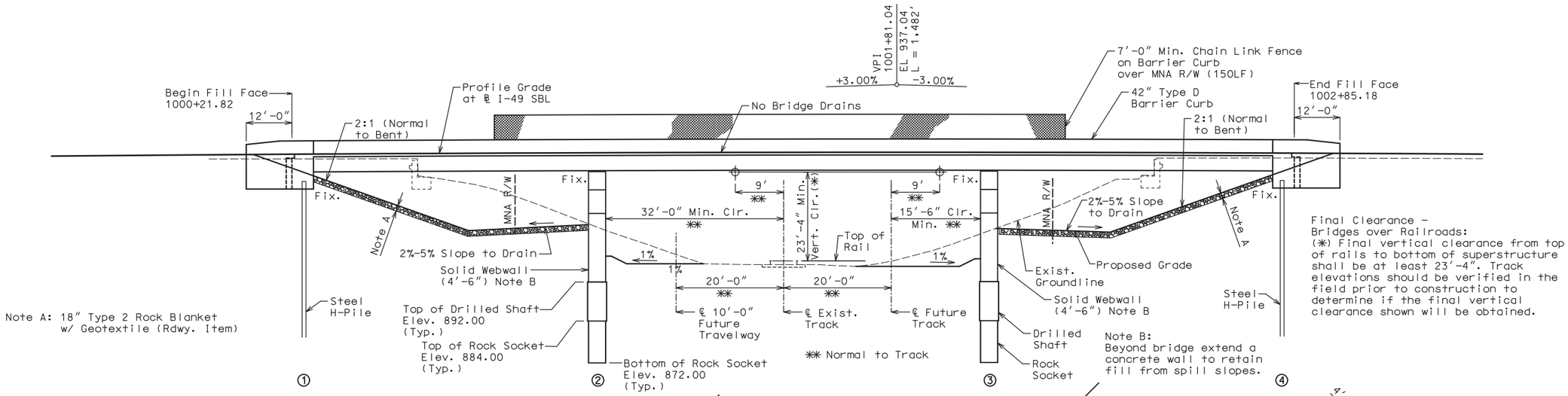

Note A: 18″ Type 2 Rock Blanket w/ Geotextile (Rdwy. Item)

Final Clearance - Bridges over Railroads:
(✱) Final vertical clearance from top of rails to bottom of superstructure shall be at least 23′-4″. Track elevations should be verified in the field prior to construction to determine if the final vertical clearance shown will be obtained.

GENERAL ELEVATION

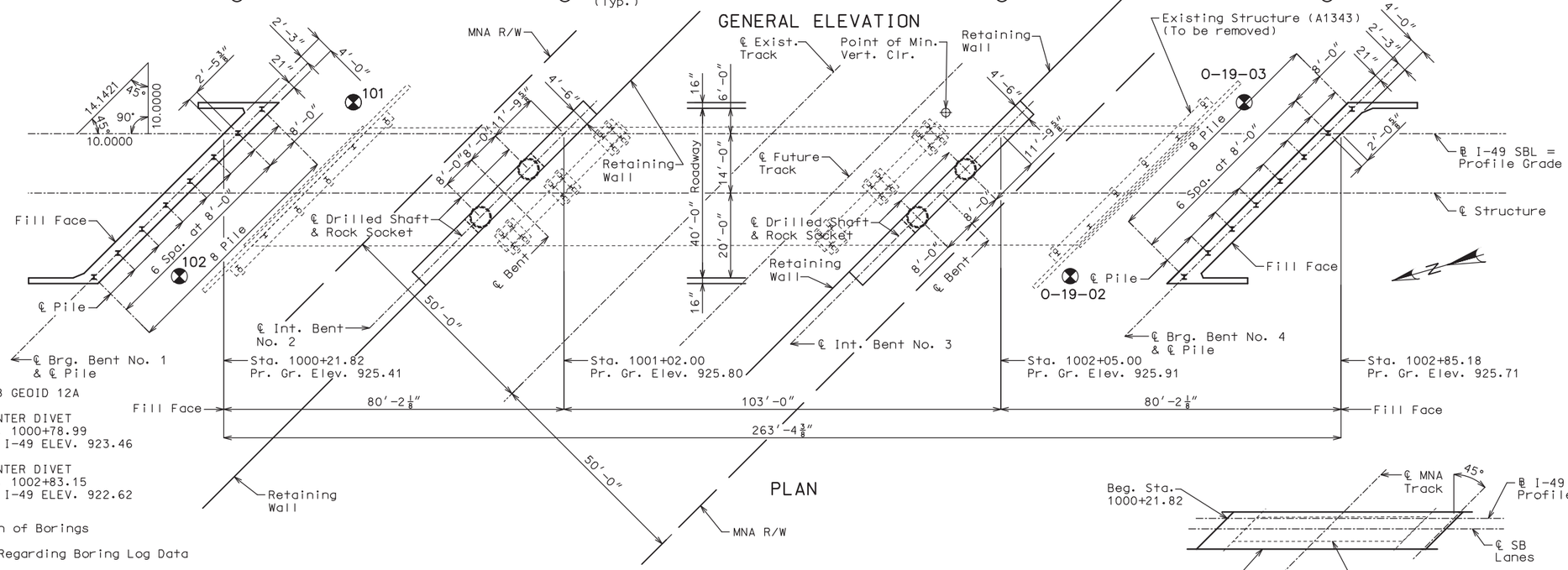

PLAN

BENCH MARKS - NAVD 1988 GEOID 12A

BM #1 - 8″ SPIKE W/ CENTER DIVET
(CONTROL POINT #1) STA. 1000+78.99
OFFSET 0.34′ RT, ℄ RTE I-49 ELEV. 923.46

BM #2 - 8″ SPIKE W/ CENTER DIVET
(CONTROL POINT #2) STA. 1002+83.15
OFFSET 4.67′ LT, ℄ RTE I-49 ELEV. 922.62

"✪" Indicates location of Borings

Notice and Disclaimer Regarding Boring Log Data

The locations of all subsurface borings for this structure are shown on the plan sheet(s) for this structure. The boring data for all locations indicated, as well as any other boring logs or other factual records of subsurface data and investigations performed by the department for the design of the project, are shown on Sheets No. 27-31 and may be included in the Electronic Bridge Deliverables. They will also be available from the Project Contact upon written request. No greater significance or weight should be given to the boring data depicted on the plan sheets than is given to the subsurface data available from the district or elsewhere.

The Commission does not represent or warrant that any such boring data accurately depicts the conditions to be encountered in constructing this project. A contractor assumes all risks it may encounter in basing its bid prices, time or schedule of performance on the boring data depicted here or those available from the district, or on any other documentation not expressly warranted, which the contractor may obtain from the Commission.

Notes:

For General Notes, Union Pacific Railroad Notes and Pile Data, see Sheet No. 2.

For Estimated Quantities and Quantity notes, see Sheet No. 3.

Existing roadway fill under the ends of the bridge shall be removed as shown. Removal of existing roadway fill will be considered completely covered by the contract unit price for roadway excavation.

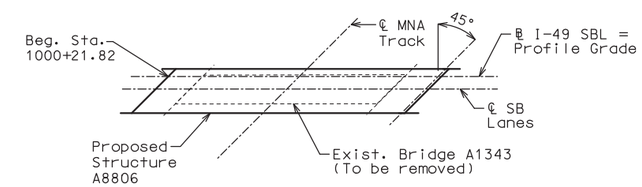

LOCATION SKETCH

BRIDGE: ROUTE I-49 SBL OVER MNA RAILROAD

STATE ROUTE I-49

ABOUT 4.5 MILES S.E. OF NEVADA

BEGINNING STATION 1000+21.82

Sheet No. 1 of 31

STD.	606.60
STD.	609.00
STD.	617.10
STD.	706.35

DESIGNED BY:	KLW	5/2020
DETAILED BY:	JTC	5/2020
CHECKED BY:	DMA	5/2020

Note: This drawing is not to scale. Follow dimensions.

"THIS MEDIA SHOULD NOT BE CONSIDERED A CERTIFIED DOCUMENT."

DATE PREPARED	
ROUTE	STATE
I-49	MO
DISTRICT	SHEET NO.
BR	1
COUNTY	
VERNON	
JOB NO.	
J7I3363	
CONTRACT ID.	
PROJECT NO.	
BRIDGE NO.	
A8806	

DESCRIPTION

DATE

REV.

MISSOURI HIGHWAYS AND TRANSPORTATION COMMISSION

105 WEST CAPITOL
JEFFERSON CITY, MO 65102
1-888-ASK-MODOT (1-888-275-6636)

LOCHNER
16105 W. 113th Street | Suite 107 | Lenexa, KS 66219
Certificate of Authority #F00727076

B_A8806_001_J7I3363_FRONT SHEET.dgn 2:53:32 PM 7/15/2020

GENERAL NOTES:

Design Specifications:
2012 AASHTO LRFD Bridge Design Specifications (6th Ed.) and 2013 Interim Revisions
2011 AASHTO Guide Specifications for LRFD Seismic Bridge Design (2nd Ed.) and 2014 Interim Revisions (Seismic Details)
Seismic Design Category = A
Design earthquake response spectral acceleration coefficient at 1.0 second period, SD1 = 0.042g
Acceleration Coefficient (effective peak ground acceleration coefficient), As = 0.036g

Design Loading:
Vehicular = HL-93.
Future Wearing Surface = 35 lb/sf
Earth 120 lb/cf.,
Equivalent Fluid Pressure = 45 lb/cf

Superstructure: Simply-supported, Non-Composite for dead load.
Continuous Composite for live load.

Design Unit Stresses:

Class B Concrete (Substructure)	f'c = 3,000 psi
Class B-2 Concrete (Drilled Shafts & Rock Sockets)	f'c = 4,000 psi
Class B-2 Concrete (Superstructure, except Prestressed Girders and Barrier Curb)	f'c = 4,000 psi
Class B-1 Concrete (Barrier Curb)	f'c = 4,000 psi
Reinforcing Steel (Grade 60)	fy = 60,000 psi
Structural Steel HP Pile (ASTM A709 Grade 50S)	fy = 50,000 psi

For Prestressed girder stresses, See Sheet Nos. 12-15.

Neoprene Pads:
Neoprene Bearing Pads shall be 60 durometer and shall be in accordance with Sec 716.

Joint Filler:
All joint filler shall be in accordance with Sec 1057 for preformed sponge rubber expansion and partition joint filler, except as noted.

Reinforcing Steel:
Minimum clearance to reinforcing steel shall be 1½", unless otherwise shown.

Traffic Handling:
Structure to be closed during construction. Traffic to be maintained on temporary bypass during construction.
See roadway plans for traffic control.

Union Pacific Railroad
Overhead Structure Construction Notes

1. The proposed grade separation project shall not increase the quantity and/or characteristics of the flow in the Railroad's ditches and/or drainage structures.
2. The elevation of the existing top-of-rail profile shall be verified before beginning construction. All discrepancies shall be brought to the attention of the Railroad prior to construction.
3. The contractor must submit a proposed method of erosion and sediment control and have the method approved by the Railroad.
4. All shoring systems that impact the Railroad's operation and/or supports the Railroad's embankment shall be designed and constructed per current Railroad Guidelines for Temporary Shoring.
5. All demolitions within the Railroad's right-of-way and/or demolition that may impact the Railroad's tracks or operations shall be in compliance with the Railroad's Demolition Guidelines.
6. Erection over the Railroad's right-of-way shall be designed to cause no interruption to the Railroad's operation, enabling the track(s) to remain open to traffic per the Railroad's requirements.
7. Railroad requirements do not allow work within 50 feet of track centerline when a train passes the work site and all personnel must clear the area within 25 feet of the track centerline and secure all equipment.
8. False-work clearances shall comply with minimum construction clearances.
9. All permanent clearances shall be verified before project closing.

Foundation Data

Type	Design Data		Bent Number 1	2	3	4
Load Bearing Pile	HP Pile Type and Size		HP 12x53	-	-	HP 12x53
	Number	ea.	8	-	-	8
	Approximate Length per Each	ft.	36	-	-	40
	Pile Point Reinforcement	ea.	All	-	-	All
	Min. Galvanized Penetration (Elev.)	ft.	Full Length	-	-	Full Length
	Pile Driving Verification Method		DF	-	-	DF
	Resistance Factor		0.4	-	-	0.4
	Minimum Nominal Axial Compressive Resistance	kip	470	-	-	470
Rock Socket	Number	ea.	-	2	2	-
	Foundation Material		-	Strong Rock	Strong Rock	-
	Elevation Range	ft.	-	880-844	880-844	-
	Resistance Factor (Side Resistance)		-	0.42	0.42	-
	Design Side Friction Minimum Nominal Axial Compressive Resistance (Side Resistance)	ksf	-	16.7	16.7	-
	Resistance Factor (Tip Resistance)		-	0.49	0.49	-
	Design End Bearing Minimum Nominal Axial Compressive Resistance (Tip Resistance)	ksf	-	190	190	-

Additional Notes:
DF=FHWA-modified Gates Dynamic Pile Formula
Load Bearing Pile:
Minimum Nominal Axial Compressive Resistance = Maximum Factored Loads/Resistance Factor
HP piles are anticipated to be driven to refusal on rock. Review all borings for depth of rock and restrict driving as appropriate to comply with hard rock driving criteria in accordance with Sec 702.

Pile point reinforcement need not be galvanized. Shop drawings will not be required for pile point reinforcement.

Rock Socket (Drilled Shafts)
The use of permanent casing is anticipated.
Minimum Nominal Axial Compressive Resistance (Side Resistance + Tip Resistance) = Maximum Factored Loads/Resistance Factors.

Thickness of permanent steel casing shall be in accordance with Sec 701.

An additional 4 feet has been added to V-bar lengths and additional 4-#4-P21 bars per shaft have been added in the quantities, if required, for possible change in drilled shaft or rock socket length. The additional V-bar length shall be cut off or included in the reinforcement lap if not required. The additional P bars shall be spaced similarly to that shown in elevation, if required, or to a lesser spacing if not required, but not less than 6-inch centers.

Sonic logging testing shall be performed on all drilled shafts and rock sockets.

UPRR "Call Before You Dig" (CBYD) phone number: 1-800-336-9193

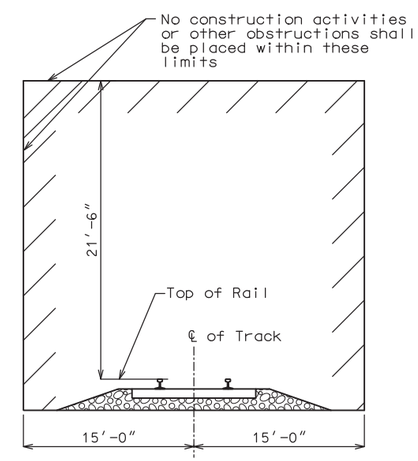

MINIMUM CONSTRUCTION CLEARANCE ENVELOPE
(Normal to Railroad)

DESIGNED BY:	KLW	4/2020
DETAILED BY:	RCL	4/2020
CHECKED BY:	DMA	5/2020

GENERAL NOTES

Note: This drawing is not to scale. Follow dimensions.

"THIS MEDIA SHOULD NOT BE CONSIDERED A CERTIFIED DOCUMENT."

DATE PREPARED	
ROUTE I-49	STATE MO
DISTRICT BR	SHEET NO. 2
COUNTY VERNON	
JOB NO. J7I3363	
CONTRACT ID.	
PROJECT NO.	
BRIDGE NO. A8806	

DESCRIPTION
DATE

MISSOURI HIGHWAYS AND TRANSPORTATION COMMISSION
105 WEST CAPITOL
JEFFERSON CITY, MO 65102
1-888-ASK-MODOT (1-888-275-6636)

LOCHNER
16105 W. 113th Street | Suite 107 | Lenexa, KS 66219
Certificate of Authority #F00727076

REV.

Estimated Quantities

Item		Substr.	Superstr.	Total
Class 1 Excavation	C.Y.	310		310
Removal of Bridges (A1343)	L.S.			1
Bridge Approach Slab (Major Road)	S.Y.			180
Pedestrian Fence (Structures)	L.F.		300	300
Drilled Shafts (5 Ft. 0 In. Dia.)	L.F.	32.0		32.0
Rock Sockets (4 Ft. 6 In. Dia.)	L.F.	48.0		48.0
Video Camera Inspection	EACH	4		4
Foundation Inspection Holes	L.F.	88.0		88.0
Sonic Logging Testing	EACH	4		4
Galvanized Structural Steel Piles (12 In.)	L.F.	608		608
Pile Point Reinforcement	EACH	16		16
Class B Concrete (Substructure)	C.Y.	382.3		382.3
Type D Barrier	L.F.		575	575
Slab On Concrete NU-Girder	S.Y.		1242	1242
NU 43, Prestressed Concrete NU-Girder	L.F.		1283	1283
Reinforcing Steel (Bridges)	POUND	47,400		47,400
Vertical Drain At End Bents	EACH	2		2
Laminated Neoprene Bearing Pad	EACH		30	30

All concrete above the construction joint in the end bents is included in the Estimated Quantities for Slab on Concrete NU-Girder.

All reinforcement in the end bents is included in the Estimated Quantities for Slab on Concrete NU-Girder.

All concrete above the intermediate beam cap is included in the Estimated Quantities for Slab on Concrete NU-Girder.

All reinforcement in the intermediate bent concrete diaphragms except reinforcement embedded in the beam cap is included in the Estimated Quantities for Slab on Concrete NU-Girder.

Estimated Quantities for Slab on Concrete NU-Girder

Item		Quantity
Class B-2 Concrete	cu. yard	462.2
Reinforcing Steel (Epoxy Coated)	pound	111,420

The table of Estimated Quantities for Slab on Concrete NU-Girder represents the quantities used by the State in preparing the cost estimate for concrete slabs. The area of the concrete slab will be measured to the nearest square yard longitudinally from end of slab to end of slab and transversely from out to out of bridge slab (or with the horizontal dimensions as shown on the plan of slab). Payment for stay-in-place corrugated steel forms, conventional forms, all concrete and epoxy coated reinforcing steel will be considered completely covered by the contract unit price for the slab. Variations may be encountered in the estimated quantities but the variations cannot be used for an adjustment in the contract unit price.

Method of forming the slab shall be as shown on the plans and in accordance with Sec 703. All hardware for forming the slab to be left in place as a permanent part of the structure shall be coated in accordance with ASTM A123 or ASTM B633 with a thickness class SC 4 and a finish type I, II or III.

Slab shall be cast-in-place with conventional forms or stay-in-place corrugated steel forms. Precast prestressed panels will not be permitted.

Stay-In-Place Corrugated Steel Forms:
Corrugated steel forms, supports, closure elements and accessories shall be in accordance with grade requirement and coating designation G165 of ASTM A653. Complete shop drawings of the permanent steel deck forms shall be required in accordance with Sec 1080.

Corrugations of stay-in-place forms shall be filled with an expanded polystyrene material. The polystyrene material shall be placed in the forms with an adhesive in accordance with the manufacturer's recommendations.

Form sheets shall not rest directly on the top of girder flanges. Sheets shall be securely fastened to form supports with a minimum bearing length of one inch on each end. Form supports shall be placed in direct contact with the flange. Welding on or drilling holes in the girder flanges will not be permitted. All steel fabrication and construction shall be in accordance with Sec 1080 and 712. Certified field welders will not be required for welding of the form supports.

The design of stay-in-place corrugated steel forms is per manufacturer which shall be in accordance with Sec 703 for false work and forms. Maximum actual weight of corrugated steel forms allowed shall be 4 psf assumed for girder loading.

Note:
Bridge is located at
MNA MP 571.4.

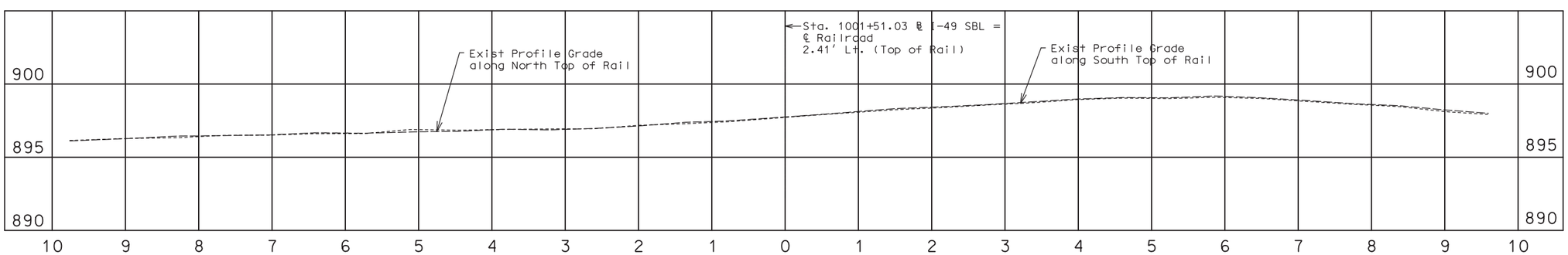

TRACK PROFILE (NORTH TO SOUTH)
(Scale: 1"= 80' Horiz.)
1"= 4' Vert.

ESTIMATED QUANTITIES AND TRACK PROFILE

DESIGNED BY:	KLW	4/2020
DETAILED BY:	RCL	4/2020
CHECKED BY:	DMA	5/2020

Note: This drawing is not to scale. Follow dimensions.

"THIS MEDIA SHOULD NOT BE CONSIDERED A CERTIFIED DOCUMENT."

DATE PREPARED

ROUTE	STATE
I-49	MO
DISTRICT	SHEET NO.
BR	3

COUNTY: VERNON
JOB NO.: J7I3363
CONTRACT ID.
PROJECT NO.
BRIDGE NO.: A8806

DATE	DESCRIPTION

MISSOURI HIGHWAYS AND TRANSPORTATION COMMISSION
105 WEST CAPITOL
JEFFERSON CITY, MO 65102
1-888-ASK-MODOT (1-888-275-6636)

LOCHNER
16105 W. 113th Street | Suite 107 | Lenexa, KS 66219
Certificate of Authority #F00727076

REV.

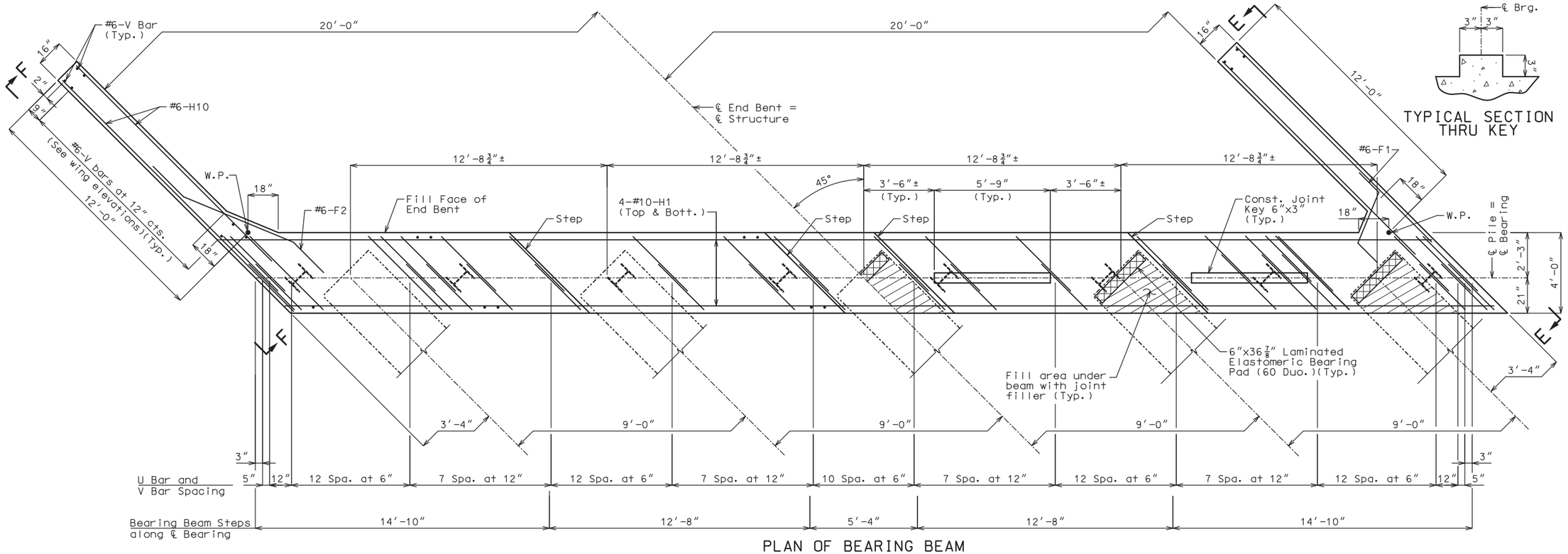

PLAN OF BEARING BEAM

TYPICAL SECTION THRU KEY

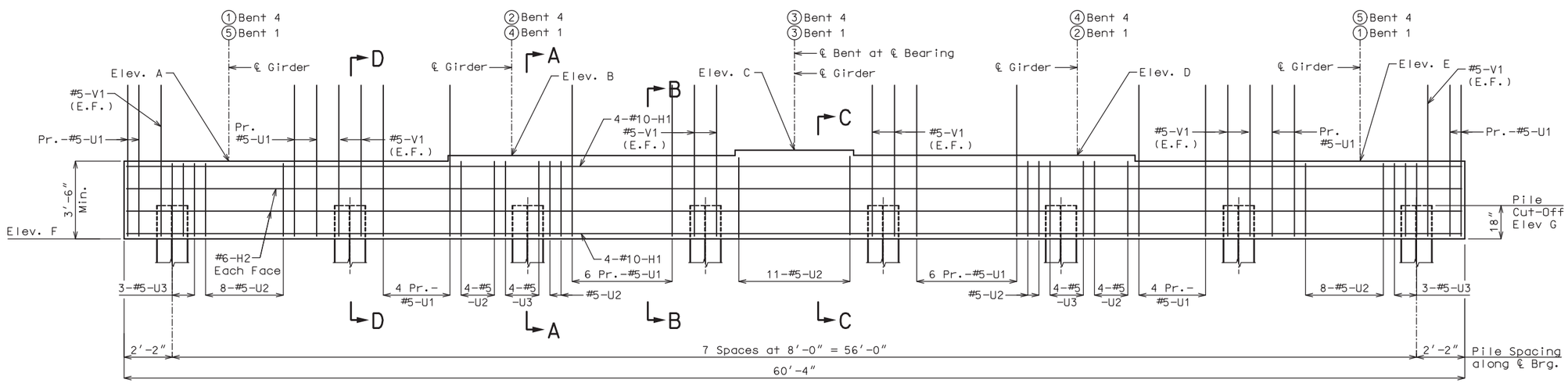

BEARING BEAM ELEVATION AT ℄ BEARING
(Keys not shown for clarity)

Notes:

For bearing pad layout and details, see Sheet No. 11.

For details of End Bent Nos. 1 and 4 not shown, see Sheets No. 5-7.

For Elevations E-E and F-F and Section thru Wing, see Sheet No. 7.

For Sections A-A thru D-D, see Sheet No. 7.

Reinforcing steel shall be shifted to clear piles. U bars shall clear piles by at least 1½ inches.

The U bars and pairs of V bars shall be placed parallel to centerline of roadway.

Note: This drawing is not to scale. Follow dimensions.

ELEVATION TABLE

Bent	Elev. A	Elev. B	Elev. C	Elev. D	Elev. E	Elev. F	Elev. G
No. 1	920.50	920.75	920.99	920.95	920.83	917.00	918.50
No. 4	921.07	921.29	921.42	921.27	921.12	917.57	919.07

LEGEND
E.F. = Each Face
1 = Girder Line

END BENT NOS. 1 AND 4 BEARING BEAM DETAILS

Sheet No. 4 of 31

DESIGNED BY:	DMA	4/2020
DETAILED BY:	JTC	4/2020
CHECKED BY:	KLW	5/2020

STATE OF MISSOURI
KEITH LAWRENCE WETTER
NUMBER E-25019
REGISTERED PROFESSIONAL ENGINEER

THIS SHEET HAS BEEN SIGNED, SEALED AND DATED ELECTRONICALLY

DATE PREPARED	
7/10/2020	
ROUTE: I-49	STATE: MO
DISTRICT: BR	SHEET NO.: 4
COUNTY: VERNON	
JOB NO.: J7I3363	
CONTRACT ID.	
PROJECT NO.	
BRIDGE NO.: A8806	

DESCRIPTION

DATE

MISSOURI HIGHWAYS AND TRANSPORTATION COMMISSION
105 WEST CAPITOL
JEFFERSON CITY, MO 65102
1-888-ASK-MODOT (1-888-275-6636)

LOCHNER
16105 W. 113th Street | Suite 107 | Lenexa, KS 66219
Certificate of Authority #F00727076

REV.

B_A8806_004_J7I3363_END BENT 1& 4_BEARING BEAM.dgn 3:47:35 PM 7/9/2020

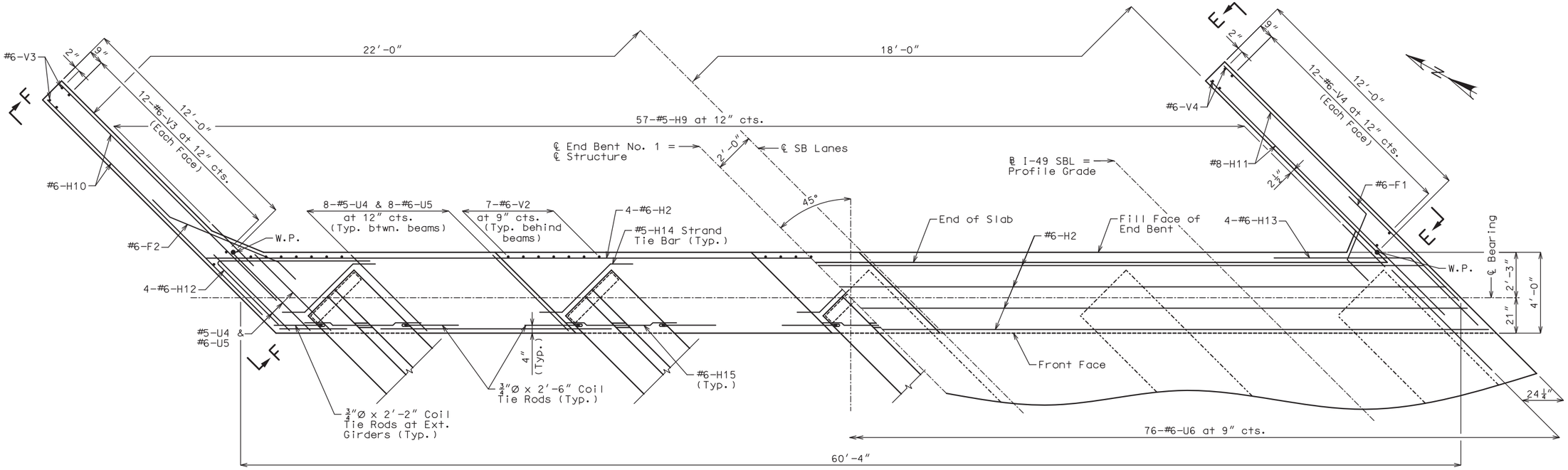

PLAN

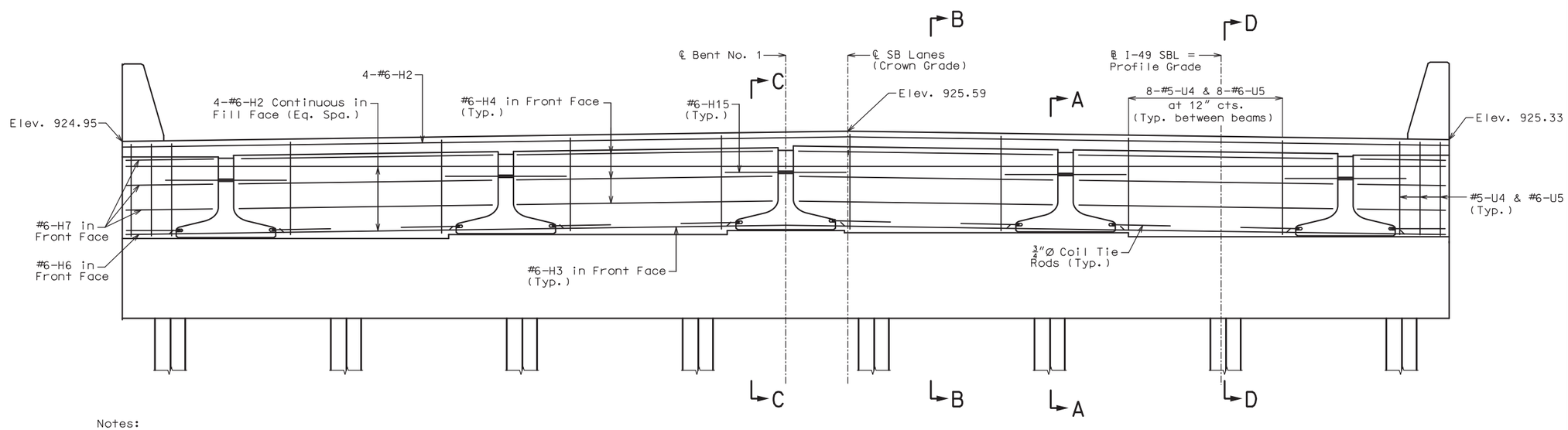

Notes:

The #6-F1 and #6-F2 bars shall be bent in the field to clear girders.

For locations of the coil tie rods and formed holes for #6-H15, see Sheet No. 12-15.

ELEVATION OF DIAPHRAGM AT CENTERLINE OF BEARING
(Looking Backstation)

END BENT NO. 1 DIAPHRAGM DETAILS

Note: This drawing is not to scale. Follow dimensions.

DESIGNED BY:	DMA	5/2020
DETAILED BY:	JTC	5/2020
CHECKED BY:	KLW	5/2020

STATE OF MISSOURI
KEITH LAWRENCE WETTER
NUMBER E-25019
REGISTERED PROFESSIONAL ENGINEER

THIS SHEET HAS BEEN SIGNED, SEALED AND DATED ELECTRONICALLY

DATE PREPARED	7/10/2020
ROUTE	I-49
STATE	MO
DISTRICT	BR
SHEET NO.	5
COUNTY	VERNON
JOB NO.	J7I3363
CONTRACT ID.	
PROJECT NO.	
BRIDGE NO.	A8806

DESCRIPTION

DATE

MISSOURI HIGHWAYS AND TRANSPORTATION COMMISSION
105 WEST CAPITOL
JEFFERSON CITY, MO 65102
1-888-ASK-MODOT (1-888-275-6636)

LOCHNER
16105 W. 113th Street | Suite 107 | Lenexa, KS 66219
Certificate of Authority #F00727076

REV.

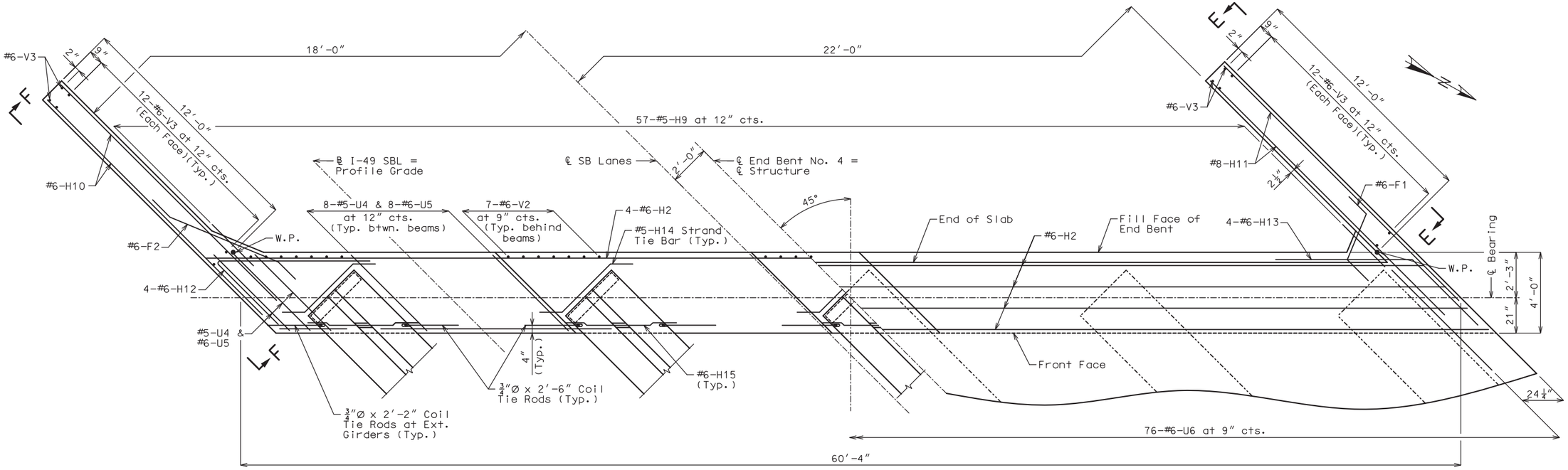

PLAN

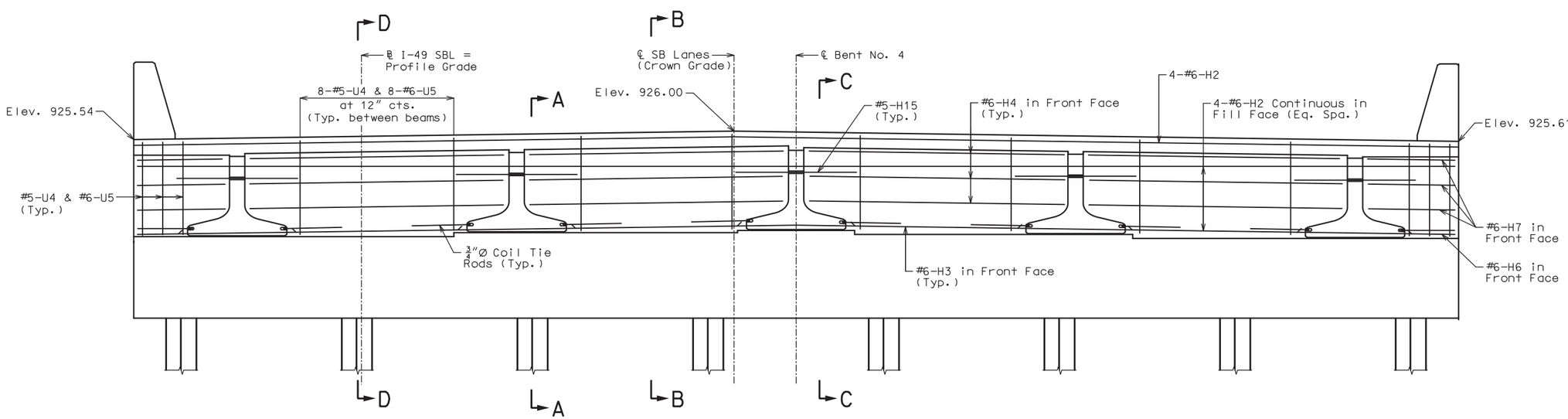

ELEVATION OF DIAPHRAGM AT CENTERLINE OF BEARING

Notes:

The #6-F1 and #6-F2 bars shall be bent in the field to clear girders.

For locations of the coil tie rods and formed holes for #6-H15, see Sheet No. 12-15.

END BENT NO. 4 DIAPHRAGM DETAILS

Note: This drawing is not to scale. Follow dimensions.

DESIGNED BY:	DMA	4/2020
DETAILED BY:	JTC	4/2020
CHECKED BY:	KLW	5/2020

STATE OF MISSOURI
KEITH LAWRENCE WETTER
NUMBER E-25019
REGISTERED PROFESSIONAL ENGINEER

THIS SHEET HAS BEEN SIGNED, SEALED AND DATED ELECTRONICALLY

DATE PREPARED 7/10/2020

ROUTE	STATE
I-49	MO
DISTRICT	SHEET NO.
BR	6

COUNTY: VERNON

JOB NO. J7I3363

CONTRACT ID.

PROJECT NO.

BRIDGE NO. A8806

DATE	DESCRIPTION

MISSOURI HIGHWAYS AND TRANSPORTATION COMMISSION
105 WEST CAPITOL
JEFFERSON CITY, MO 65102
1-888-ASK-MODOT (1-888-275-6636)

LOCHNER
16105 W. 113th Street | Suite 107 | Lenexa, KS 66219
Certificate of Authority #F00727076

REV.

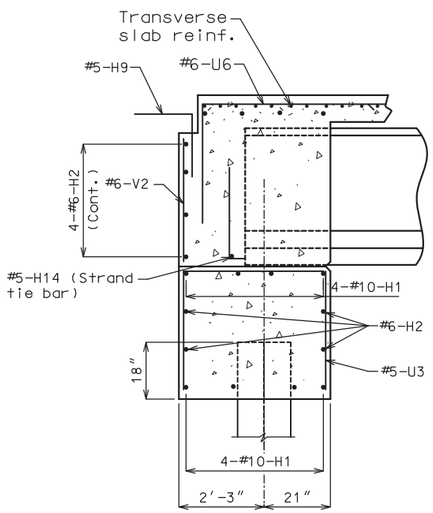

SECTION A-A

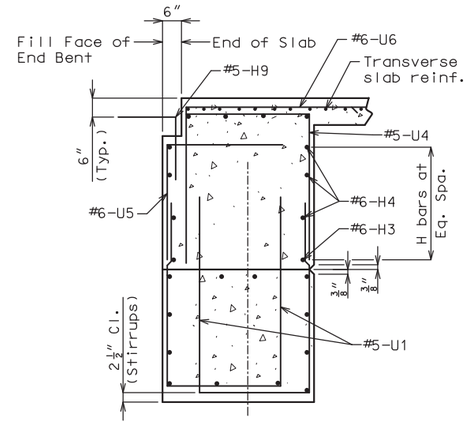

SECTION B-B◐

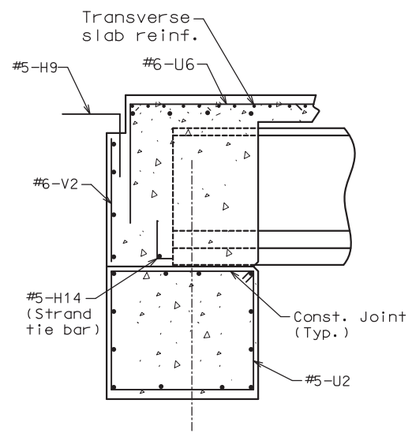

SECTION C-C◐

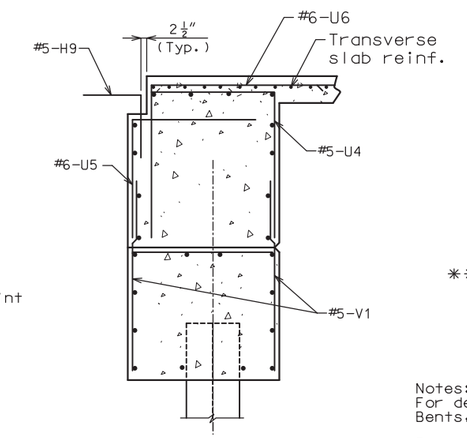

SECTION D-D◐

◐See Section A-A for horizontal bars.

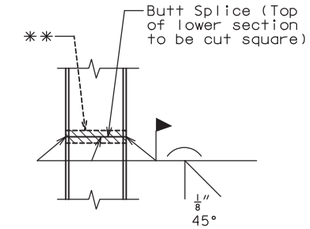

STEEL PILE SPLICE
(If required)

** Galvanizing material shall be omitted or removed one inch clear of weld locations in accordance with Sec 702.

Notes:
For details of Vertical Drain at End Bents, see Sheet No. 8.

For reinforcement of the Type D Barrier, see Sheet No. 21.

Strands at end of the beam shall be field bent or, if necessary, cut in field to maintain 1 1/2" minimum clearance to fill face of end bent.

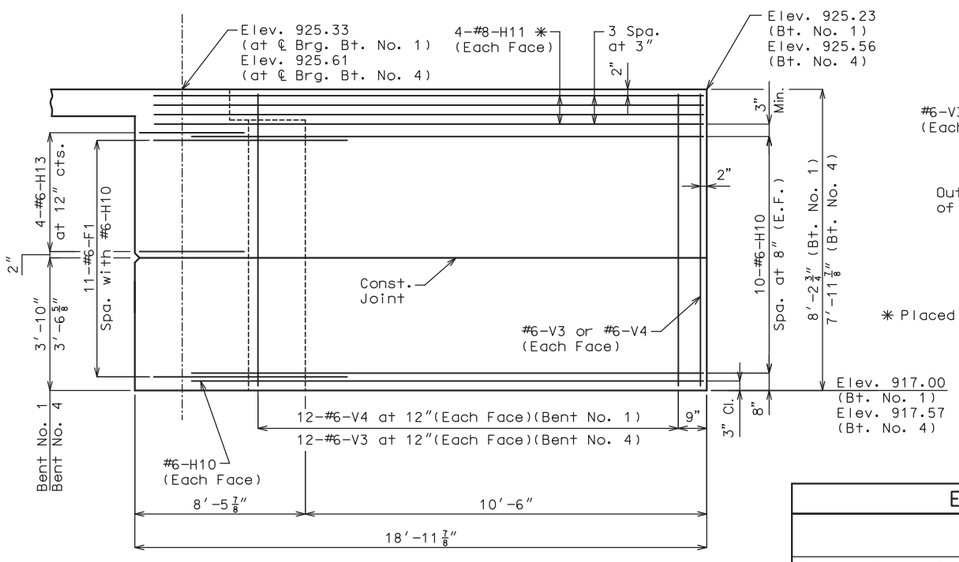

ELEVATION E-E
(Bent No. 1 Left Wing)
(Bent No. 4 Right Wing)

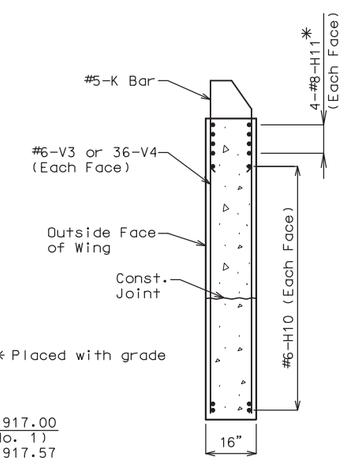

TYPICAL SECTION THRU WING

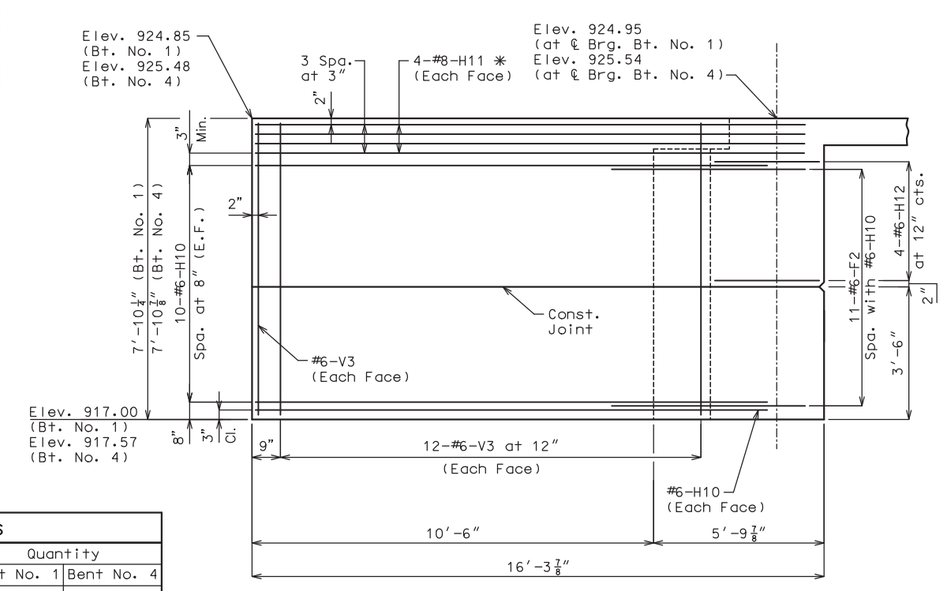

ELEVATION F-F
(Bent No. 1 Right Wing)
(Bent No. 4 Left Wing)

Estimated Quantities

Item		Quantity Bent No. 1	Quantity Bent No. 4
Class 1 Excavation	cu. yard	70	70
Galv. Str. Steel Piles (12 In.)	linear foot	288	320
Pile Point Reinforcement	each	8	8
Class B Concrete (Substructure)	cu. yard	38.5	37.1

Notes:
These quantities are included in the estimated quantities table on Sheet No. 3.

All concrete in the end bent above top of bearing beam and below top of slab shall be Class B-2.

Note: This drawing is not to scale. Follow dimensions.

END BENT NOS. 1 AND 4 WINGS AND SECTIONS

Sheet No. 7 of 31

DESIGNED BY:	DMA	4/2020
DETAILED BY:	JTC	4/2020
CHECKED BY:	KLW	5/2020

STATE OF MISSOURI
KEITH LAWRENCE WETTER
NUMBER E-25019
REGISTERED PROFESSIONAL ENGINEER

THIS SHEET HAS BEEN SIGNED, SEALED AND DATED ELECTRONICALLY

DATE PREPARED 7/10/2020

ROUTE	STATE
I-49	MO
DISTRICT BR	SHEET NO. 7

COUNTY VERNON
JOB NO. J7I3363
CONTRACT ID.
PROJECT NO.
BRIDGE NO. A8806

DESCRIPTION | DATE

MISSOURI HIGHWAYS AND TRANSPORTATION COMMISSION
105 WEST CAPITOL
JEFFERSON CITY, MO 65102
1-888-ASK-MODOT (1-888-275-6636)

LOCHNER
16105 W. 113th Street | Suite 107 | Lenexa, KS 66219
Certificate of Authority #F00727076

REV.

B_A8806_007_J7I3363_END BENT 1& 4_WINGS.dgn 3:44:11 PM 7/9/2020

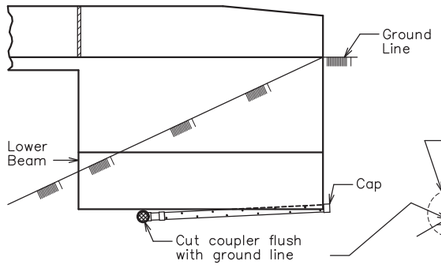

ELEVATION OF WING

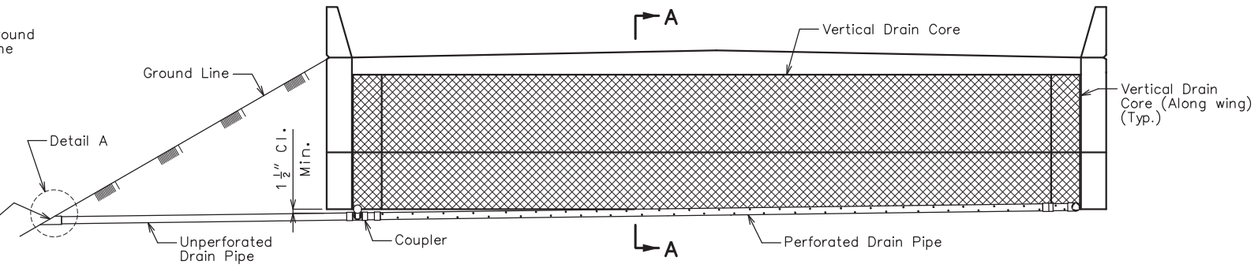

ELEVATION OF END BENT

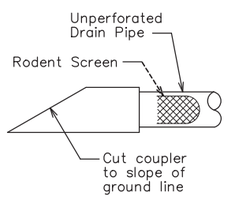

DETAIL A

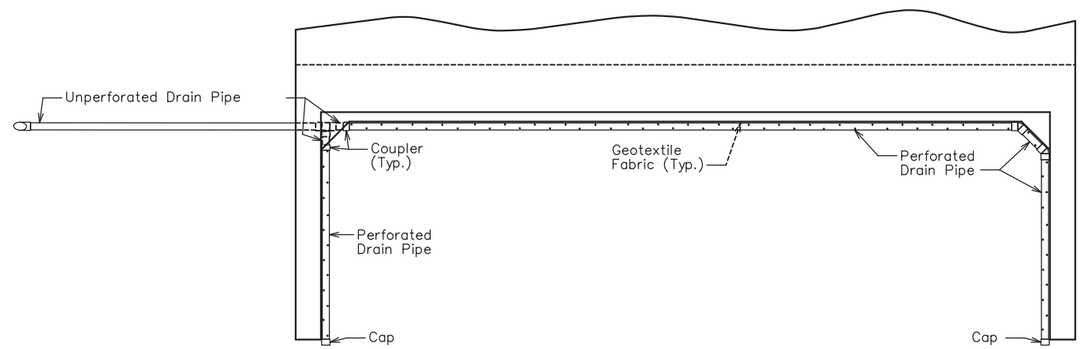

PLAN OF END BENT

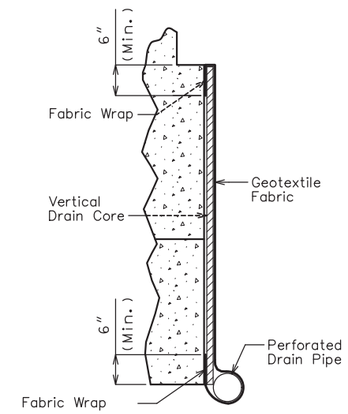

PART SECTION A–A
(Section thru wing similar)

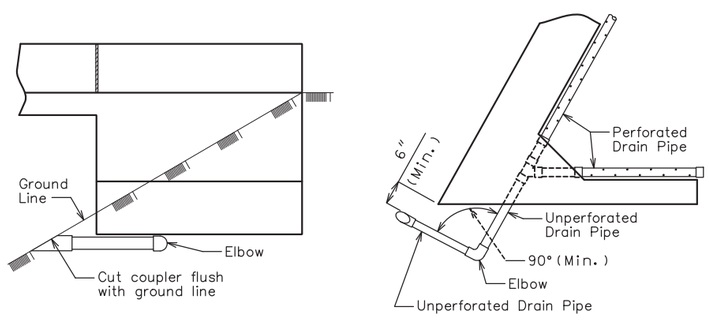

ELEVATION OF WING

PART PLAN

OPTIONAL TURNED DRAIN
(Only if rock is encountered outside of wing)

General Notes:

All drain pipe shall be sloped 1 to 2 percent.

Drain pipe may be either 6–inch diameter corrugated metallic–coated steel pipe underdrain, 4–inch diameter corrugated polyvinyl chloride (PVC) drain pipe, or 4–inch diameter corrugated polyethylene (PE) drain pipe.

Drain pipe shall be placed at fill face of end bent and inside face of wings. The pipe shall slope to lowest grade of ground line, also missing the lower beam of end bent by a minimum of 1 1/2 inches.

Perforated pipe shall be placed at fill face side and inside face of wings at the bottom of end bent and plain pipe shall be used where the vertical drain ends to the exit at ground line.

VERTICAL DRAIN AT END BENTS
(Squared end bent shown, skewed end bent similar)

DESIGNED BY:	KLW	4/2020
DETAILED BY:	JTC	4/2020
CHECKED BY:	JSS	5/2020

Note: This drawing is not to scale. Follow dimensions.

STATE OF MISSOURI
KEITH LAWRENCE WETTER
NUMBER E-25019
REGISTERED PROFESSIONAL ENGINEER

THIS SHEET HAS BEEN SIGNED, SEALED AND DATED ELECTRONICALLY

DATE PREPARED 7/10/2020

ROUTE	STATE
I-49	MO
DISTRICT	SHEET NO.
BR	8

COUNTY VERNON

JOB NO. J7I3363

CONTRACT ID.

PROJECT NO.

BRIDGE NO. A8806

DESCRIPTION

DATE

MISSOURI HIGHWAYS AND TRANSPORTATION COMMISSION
105 WEST CAPITOL
JEFFERSON CITY, MO 65102
1-888-ASK-MODOT (1-888-275-6636)

LOCHNER
16105 W. 113th Street | Suite 107 | Lenexa, KS 66219
Certificate of Authority #F00727076

REV.

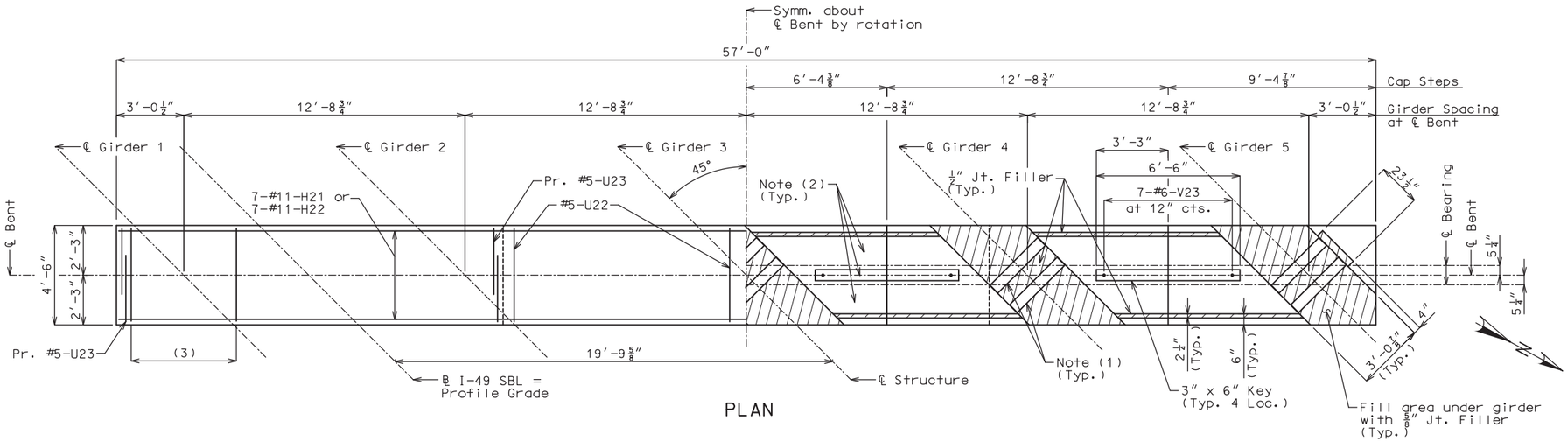

PLAN

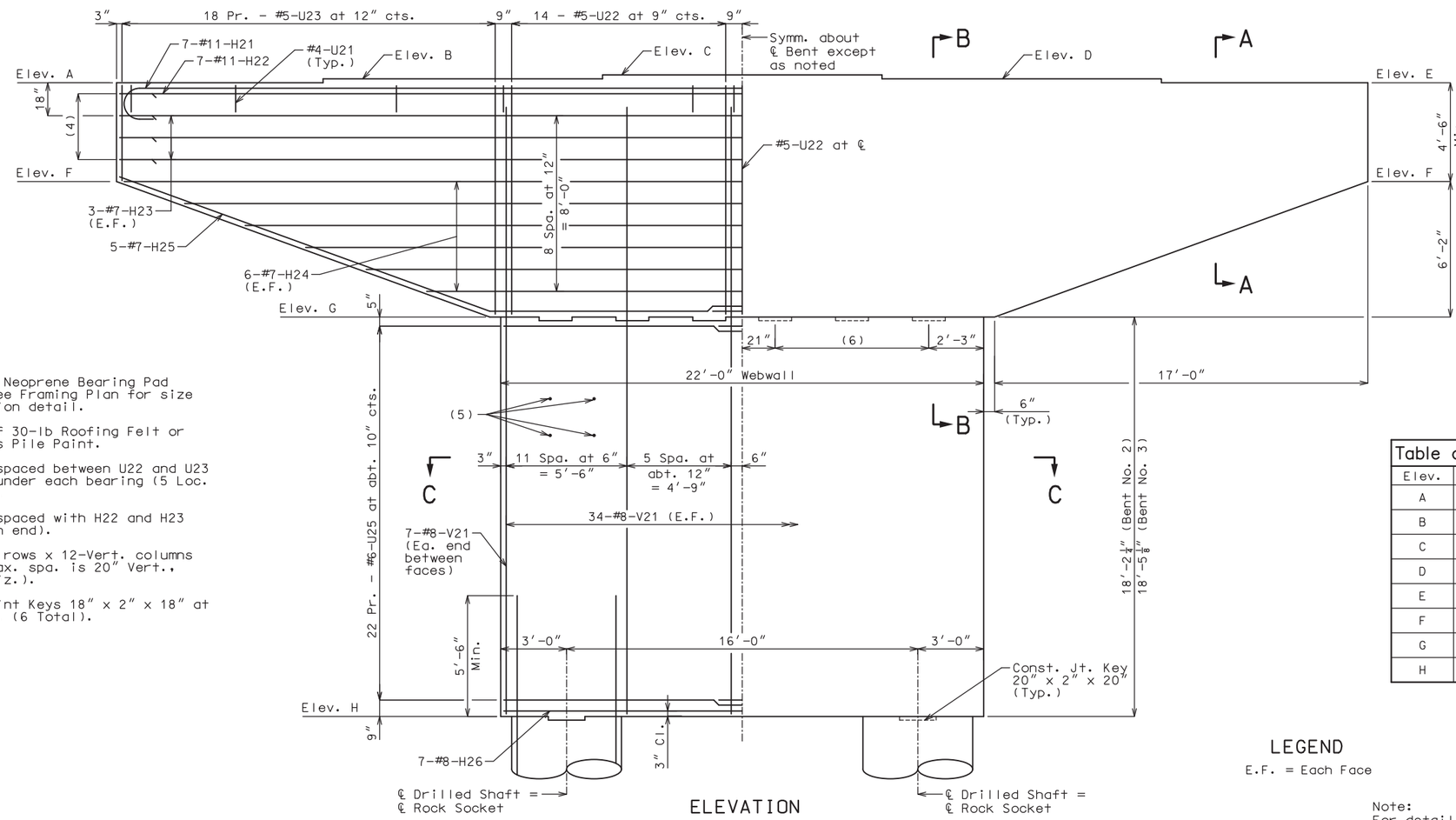

ELEVATION

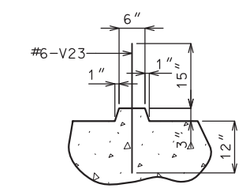

SECTION THRU KEY

(1) Laminated Neoprene Bearing Pad (Typ.). See Framing Plan for size and location detail.

(2) 1-layer of 30-lb Roofing Felt or Bituminous Pile Paint.

(3) 6-#4-U21 spaced between U22 and U23 stirrups under each bearing (5 Loc. Per Bent).

(4) 4-#7-U24 spaced with H22 and H23 (Typ. each end).

(5) 11-Horiz. rows x 12-Vert. columns #4-U26 (Max. spa. is 20″ Vert., 2′-0″ Horiz.).

(6) Const. Joint Keys 18″ x 2″ x 18″ at 3′-6″ cts. (6 Total).

Table of Elevations

Elev.	Bent No. 2	Bent No. 3
A	921.07	921.17
B	921.25	921.39
C	921.32	921.49
D	921.11	921.32
E	920.86	921.10
F	916.36	916.60
G	910.19	910.43
H	892.00	892.00

LEGEND

E.F. = Each Face

Note:
For details of Sections A-A, B-B and C-C, see Sheet No. 10.

DETAILS OF INTERMEDIATE BENT NOS. 2 AND 3
(SHEET 1 OF 2)

Note: This drawing is not to scale. Follow dimensions.

Sheet No. 9 of 31

DESIGNED BY:	KLW	5/2020
DETAILED BY:	JTC	5/2020
CHECKED BY:	MAH	5/2020

STATE OF MISSOURI
KEITH LAWRENCE WETTER
NUMBER E-25019
REGISTERED PROFESSIONAL ENGINEER

THIS SHEET HAS BEEN SIGNED, SEALED AND DATED ELECTRONICALLY

DATE PREPARED 7/10/2020

ROUTE	STATE
I-49	MO
DISTRICT	SHEET NO.
BR	9

COUNTY: VERNON

JOB NO. J7I3363

CONTRACT ID.

PROJECT NO.

BRIDGE NO. A8806

DESCRIPTION

DATE

MISSOURI HIGHWAYS AND TRANSPORTATION COMMISSION
105 WEST CAPITOL
JEFFERSON CITY, MO 65102
1-888-ASK-MODOT (1-888-275-6636)

LOCHNER
16105 W. 113th Street | Suite 107 | Lenexa, KS 66219
Certificate of Authority #F00727076

REV.

B_A8806_009_J7I3363_INT BENT 2 & 3_DETAILS_01.dgn 3:50:08 PM 7/9/2020

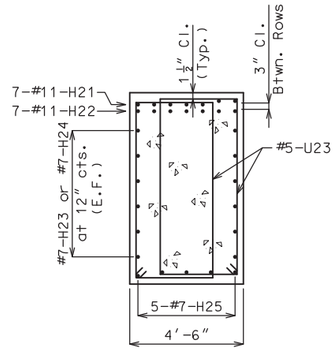

SECTION A-A

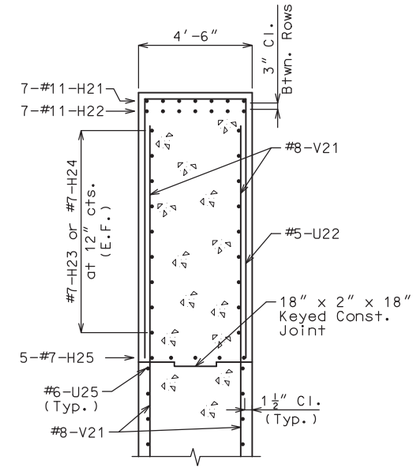

SECTION B-B

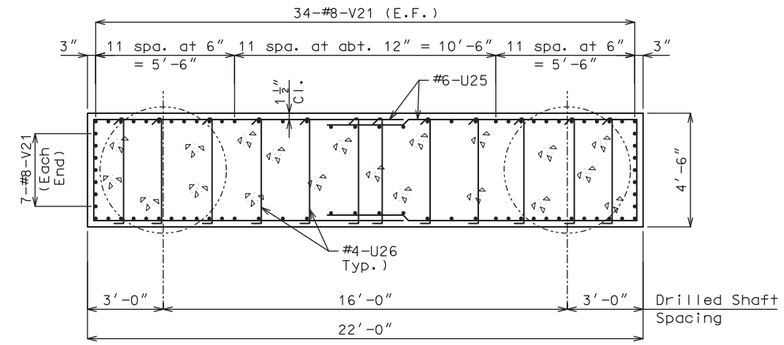

SECTION C-C

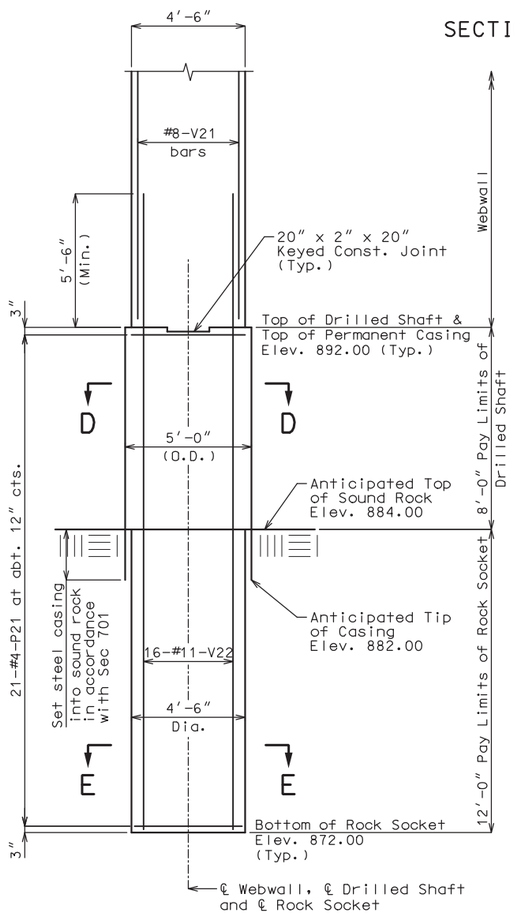

ELEVATION OF DRILLED SHAFTS AND ROCK SOCKETS

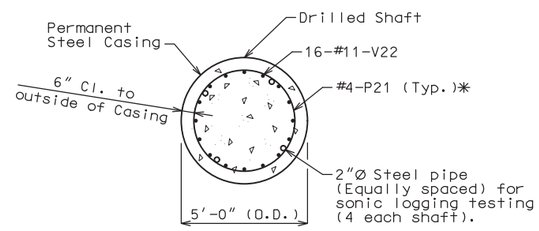

SECTION D-D

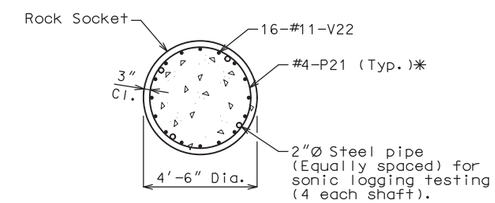

SECTION E-E

✳ Stagger adjacent P21 bar laps

Estimated Quantities

Item		Quantity Bent No. 2	Quantity Bent No. 3
Class 1 Excavation	cu. yard	85	85
Drilled Shafts (5 ft. 0 in. Dia.)	linear foot	16.0	16.0
Rock Sockets (4 ft. 6 in. Dia.)	linear foot	24.0	24.0
Video Camera Inspection	each	2	2
Foundation Inspection Holes	linear foot	44.0	44.0
Sonic Logging Testing	each	2	2
Class B Concrete (Substructure)	cu. yard	153.2	153.5
Reinforcing Steel (Bridges)	pounds	23,700	23,700

Notes:
These quantities are included in the estimated quantities table on Sheet No. 3.

All Drilled Shaft and Rock Socket reinforcements are included in substructure quantities.

DETAILS OF INTERMEDIATE BENT NOS. 2 AND 3 (SHEET 2 OF 2)

Note: This drawing is not to scale. Follow dimensions.

DESIGNED BY:	KLW	5/2020
DETAILED BY:	JTC	5/2020
CHECKED BY:	MAH	5/2020

STATE OF MISSOURI
KEITH LAWRENCE WETTER
NUMBER E-25019
REGISTERED PROFESSIONAL ENGINEER

THIS SHEET HAS BEEN SIGNED, SEALED AND DATED ELECTRONICALLY

DATE PREPARED	7/10/2020
ROUTE	I-49
STATE	MO
DISTRICT	BR
SHEET NO.	10
COUNTY	VERNON
JOB NO.	J7I3363
CONTRACT ID.	
PROJECT NO.	
BRIDGE NO.	A8806

DESCRIPTION | DATE

MISSOURI HIGHWAYS AND TRANSPORTATION COMMISSION
105 WEST CAPITOL
JEFFERSON CITY, MO 65102
1-888-ASK-MODOT (1-888-275-6636)

LOCHNER
16105 W. 113th Street | Suite 107 | Lenexa, KS 66219
Certificate of Authority #F00727076

REV.

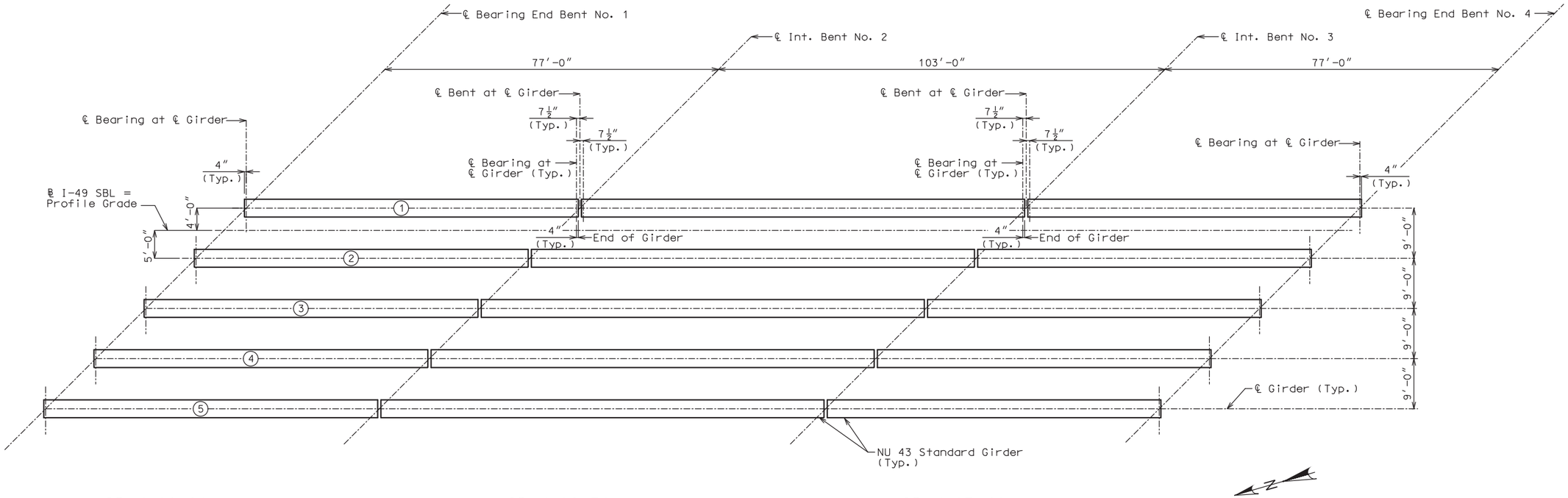

FRAMING PLAN

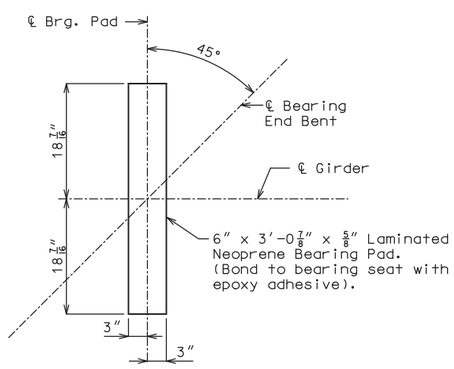

END BENT BEARING PAD LAYOUT

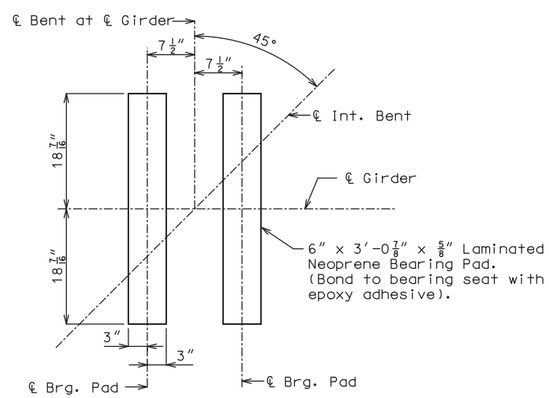

INTERMEDIATE BENT BEARING PAD LAYOUT

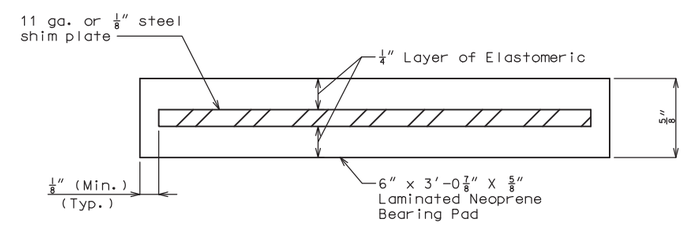

BEARING PAD DETAIL (30 Total)

GENERAL NOTES:

Neoprene Elastomeric Pads shall be 60 Durometer.

Laminated Neoprene Bearing Pad shall be in accordance with Sec 716.

Longitudinal dimensions are horizontal from centerline bearing to centerline bearing.

GIRDER FRAMING PLAN AND BEARING PAD DETAILS

DESIGNED BY:	KLW	4/2020
DETAILED BY:	JTC	4/2020
CHECKED BY:	MAH	5/2020

Note: This drawing is not to scale. Follow dimensions.

STATE OF MISSOURI
KEITH LAWRENCE WETTER
NUMBER E-25019
REGISTERED PROFESSIONAL ENGINEER

THIS SHEET HAS BEEN SIGNED, SEALED AND DATED ELECTRONICALLY

DATE PREPARED: 7/10/2020

ROUTE	STATE
I-49	MO
DISTRICT	SHEET NO.
BR	11

COUNTY: VERNON

JOB NO.: J7I3363

CONTRACT ID.

PROJECT NO.

BRIDGE NO.: A8806

DESCRIPTION	DATE

MISSOURI HIGHWAYS AND TRANSPORTATION COMMISSION
105 WEST CAPITOL
JEFFERSON CITY, MO 65102
1-888-ASK-MODOT (1-888-275-6636)

LOCHNER
16105 W. 113th Street | Suite 107 | Lenexa, KS 66219
Certificate of Authority #F00727076

REV.

Concrete for prestressed girders shall be Class A-1 with f'c = 8000 psi and f'ci = 6500 psi.

(+) indicates prestressing strand.

Use 24 strands with an initial prestress force of 1054.6 kips.

Prestressing tendons shall be uncoated, seven-wire, low-relaxation strands, 0.6 inch diameter in accordance with AASHTO M 203, Grade 270. Pretensioned members shall be in accordance with Sec 1029.

Fabricator shall be responsible for location and design of lifting devices.

✱ Girder top flange shall be steel troweled to a smooth finish for 8" at the edges, as shown. Apply two layers of 30-lb roofing felt as a bond breaker to this region only. The center portion shall be rough finished by scarifying the surface transversely with a wire brush, and no laitance shall remain on the surface.

✱✱ At the contractor's option the location for bent-up strands may be varied from that shown for fully bonded strands only. The total number of bent-up strands shall not be changed. One strand tie bar is required for each layer of bent-up strands except at end bents which require one bar on the bottom layer of strands only. No additional payment will be made if additional strand tie bars are required.

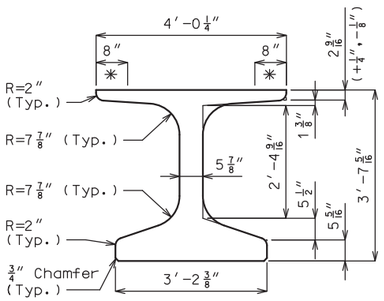

DIMENSIONS

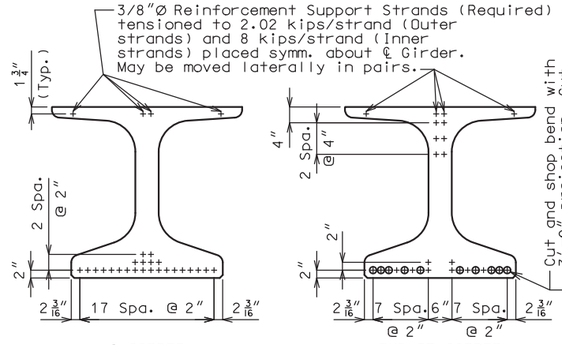

℄ GIRDER END OF GIRDER

STRAND ARRANGEMENTS

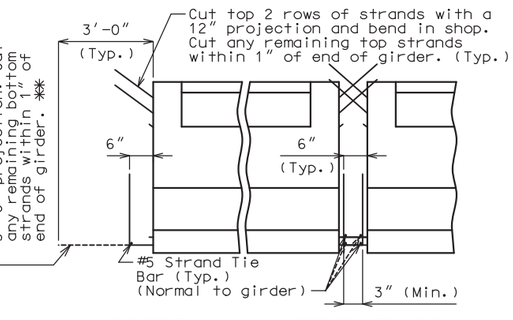

END BENT INTERMEDIATE BENT

STRAND DETAILS AT GIRDER ENDS

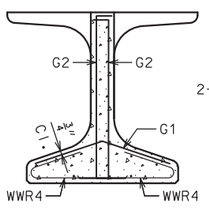

SECTION A-A

Strands not shown for clarity.

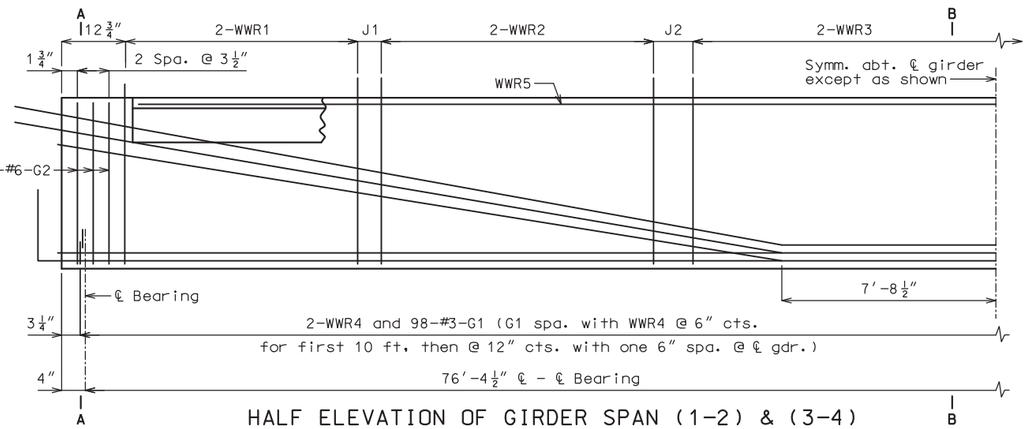

HALF ELEVATION OF GIRDER SPAN (1-2) & (3-4)

Exterior and interior girders are the same, except for coil ties, and top flange blockout. Reinforcement support strands not shown for clarity.

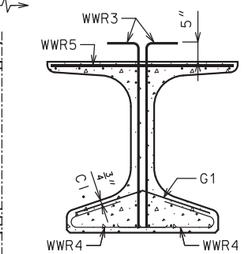

SECTION B-B

Strands not shown for clarity.

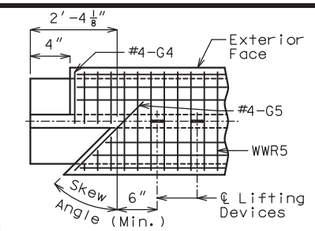

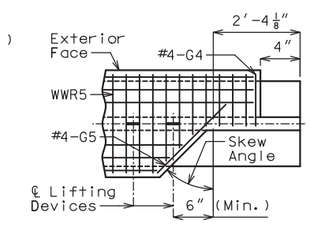

LEFT EXTERIOR GIRDER AT INTERMEDIATE BENT (ROTATE 180° FOR RIGHT EXTERIOR)

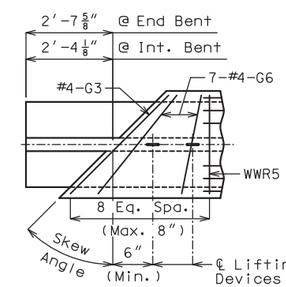

INTERIOR GIRDER AT ALL BENTS & EXTERIOR GIRDER AT END BENT

TOP FLANGE BLOCKOUT

BILL OF REINFORCING STEEL - EACH GIRDER			
NO.	SIZE & MARK	ACTUAL LENGTH	SHAPE
98	3 G1	2'-10"	8
12	6 G2	4'-4"	11
2	4 G3	5'-5"	20
2	4 G4	2'-1"	20
2	4 G5	3'-9"	20
14	4 G6	Varies	20

BENDING DIAGRAMS

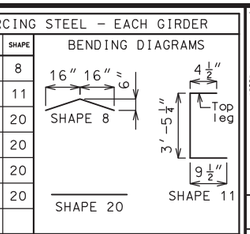

G4 and G5 not required for interior girders. G3 and G6 not required for exterior girders of intermediate spans. Half no. of G3, G4, G5 and G6 not required for ext. girders of end spans.

WELDED WIRE REINFORCEMENT - EACH GIRDER				
MARK	WIRE SIZE	S	L	J
WWR1	D31	4"	11'-8"	5 1/2"
WWR2	D31	12"	7'-0"	12"
WWR3	D31	16"	34'-8"	-

BENDING DIAGRAMS

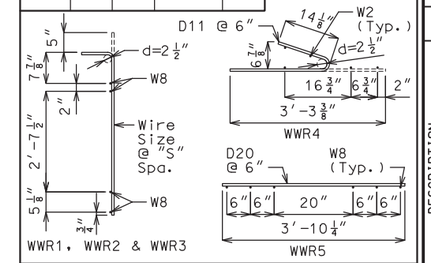

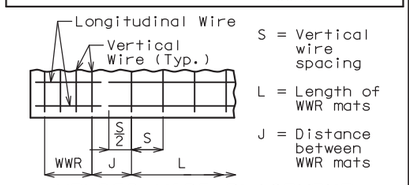

WELDED WIRE PLACEMENT

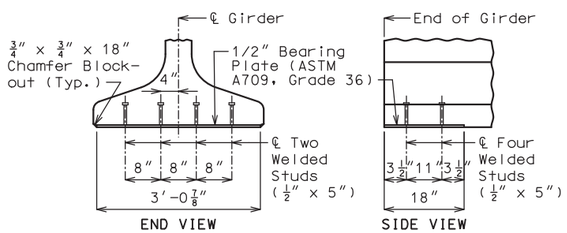

BEARING PLATE DETAILS

Galvanize the 1/2" bearing plate (ASTM A709 Grade 36) in accordance with ASTM A123.

Cost of furnishing, galvanizing, and installing the 1/2" bearing plate (ASTM A709 Grade 36) and welded studs in the prestressed girder will be considered completely covered by the contract unit price for Prestressed Concrete NU-Girder.

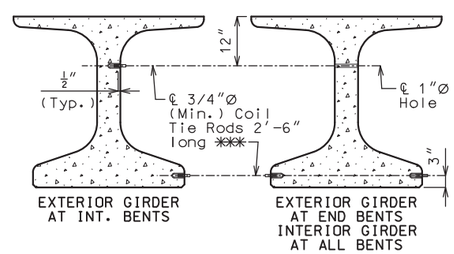

DETAILS OF COIL TIES

Cast 1"Ø hole horizontally in girder for #6 bar 5'-6" long and clear reinforcing steel or strands by 1 1/2" minimum.

✱✱✱ Length of coil tie rods at exterior face of exterior girders at end bents = 2'-2".

General Notes:

Reinforcing Steel:

All dimensions are out to out.

Hooks and bends shall be in accordance with the CRSI Manual of Standard Practice for Detailing Reinforced Concrete Structures, Stirrup and Tie Dimensions.

Actual bar lengths are measured along centerline of bar to the nearest inch.

Minimum clearance to reinforcing shall be 1", unless otherwise shown.

All bar reinforcement shall be Grade 60.

Welded Wire Reinforcement (WWR) shall be in accordance with AASHTO M 221. WWR shall not be epoxy coated.

Miscellaneous:

Cost of 3/4"Ø coil tie rods placed in diaphragms will be considered completely covered by the contract unit price for Prestressed Concrete NU-Girder.

Coil ties shall be held in place in the forms by slotted wire-setting-studs projecting thru forms. Studs are to be left in place or replaced with temporary plugs until girders are erected, then replaced by coil tie rods.

The contractor shall provide bracing necessary for lateral and torsional stability of the girders during construction of the concrete slab and remove the bracing after the slab has attained 75% design strength. Contractor shall not drill holes in the girders. The cost for furnishing, installing, and removing bracing will be considered completely covered by the contract unit price for Prestressed Concrete NU-Girder.

For location of coil ties and #6 bars at concrete bent diaphragms, see Sheets No. 5,6 and 16.

For Girder Camber Diagram, see Sheet No. 17.

Alternate bar reinforcing steel details are provided and may be used. The same type of reinforcing steel shall be used for all girders in all spans.

Note: This drawing is not to scale. Follow dimensions.

DESIGNED BY:	KLW	4/2020
DETAILED BY:	JTC	5/2020
CHECKED BY:	MAH	5/2020

STATE OF MISSOURI
KEITH LAWRENCE WETTER
NUMBER E-25019
REGISTERED PROFESSIONAL ENGINEER

THIS SHEET HAS BEEN SIGNED, SEALED AND DATED ELECTRONICALLY

DATE PREPARED 7/10/2020

ROUTE	STATE
I-49	MO
DISTRICT	SHEET NO.
BR	12

COUNTY VERNON

JOB NO. J7I3363

CONTRACT ID.

PROJECT NO.

BRIDGE NO. A8806

DATE	DESCRIPTION

MISSOURI HIGHWAYS AND TRANSPORTATION COMMISSION

105 WEST CAPITOL
JEFFERSON CITY, MO 65102
1-888-ASK-MODOT (1-888-275-6636)

LOCHNER
16105 W. 113th Street | Suite 107 | Lenexa, KS 66219
Certificate of Authority #F00727076

REV.

Concrete for prestressed girders shall be Class A-1 with f'c = 8000 psi and f'ci = 6500 psi.

(+) indicates prestressing strand.

Use 24 strands with an initial prestress force of 1054.6 kips.

Prestressing tendons shall be uncoated, seven-wire, low-relaxation strands, 0.6 inch diameter in accordance with AASHTO M 203, Grade 270. Pretensioned members shall be in accordance with Sec 1029.

Fabricator shall be responsible for location and design of lifting devices.

✱ Girder top flange shall be steel troweled to a smooth finish for 8" at the edges, as shown. Apply two layers of 30-lb roofing felt as a bond breaker to this region only. The center portion shall be rough finished by scarifying the surface transversely with a wire brush, and no laitance shall remain on the surface.

✱✱ At the contractor's option the location for bent-up strands may be varied from that shown for fully bonded strands only. The total number of bent-up strands shall not be changed. One strand tie bar is required for each layer of bent-up strands except at end bents which require one bar on the bottom layer of strands only. No additional payment will be made if additional strand tie bars are required.

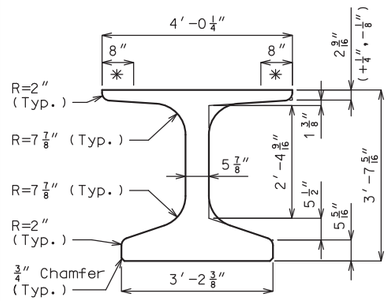

DIMENSIONS

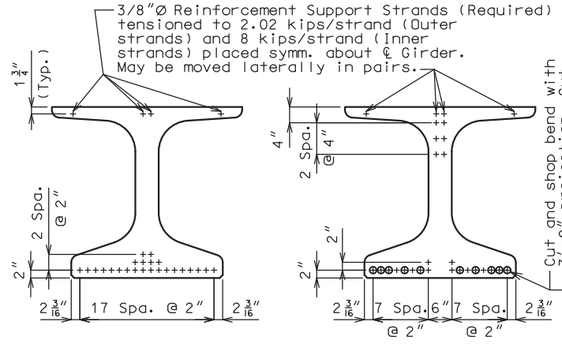

℄ GIRDER END OF GIRDER

STRAND ARRANGEMENTS

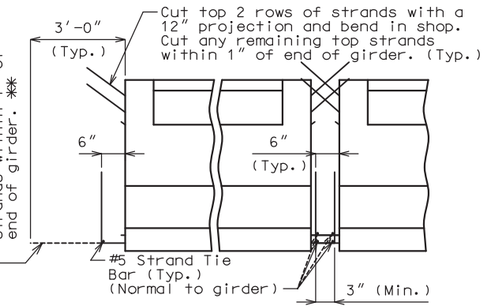

END BENT INTERMEDIATE BENT

STRAND DETAILS AT GIRDER ENDS

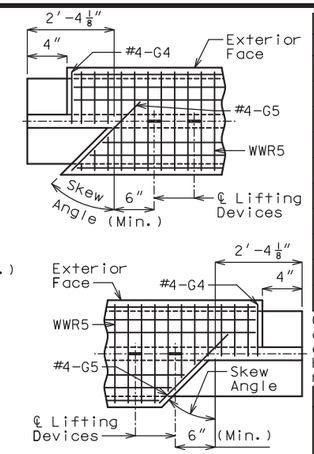

LEFT EXTERIOR GIRDER AT INTERMEDIATE BENT (ROTATE 180° FOR RIGHT EXTERIOR)

BILL OF REINFORCING STEEL - EACH GIRDER			
NO.	SIZE & MARK	ACTUAL LENGTH	SHAPE
218	5 B1	5'-0"	11
12	6 B2	4'-4"	11
218	4 D1	4'-0"	9
2	4 G3	5'-5"	20
2	4 G4	2'-1"	20
2	4 G5	3'-9"	20
14	4 G6	Varies	20

BENDING DIAGRAMS

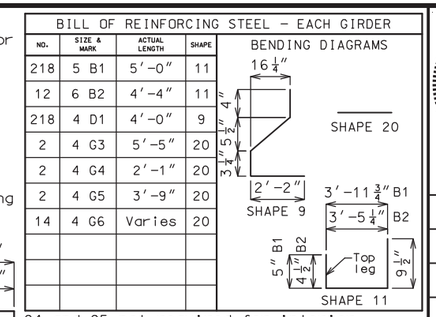

G4 and G5 not required for interior girders. G3 and G6 not required for exterior girders of intermediate spans. Half no. of G3, G4, G5 and G6 not required for ext. girders of end spans.

WELDED WIRE REINFORCEMENT - EACH GIRDER

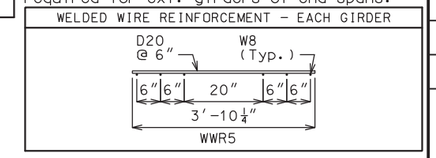

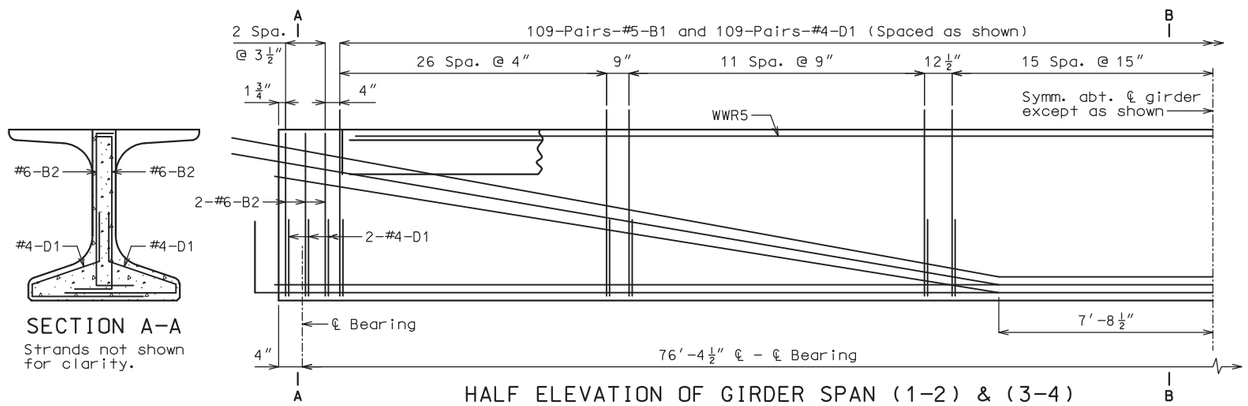

SECTION A-A

Strands not shown for clarity.

HALF ELEVATION OF GIRDER SPAN (1-2) & (3-4)

Exterior and interior girders are the same, except for coil ties, and top flange blockout. Reinforcement support strands not shown for clarity.

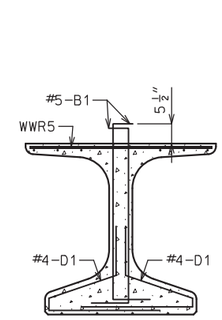

SECTION B-B

Strands not shown for clarity.

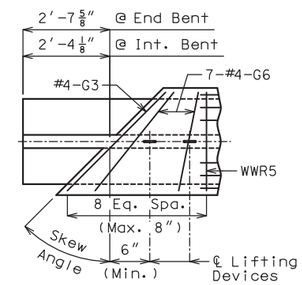

INTERIOR GIRDER AT ALL BENTS & EXTERIOR GIRDER AT END BENT

TOP FLANGE BLOCKOUT

General Notes:

Reinforcing Steel:

All dimensions are out to out.

Hooks and bends shall be in accordance with the CRSI Manual of Standard Practice for Detailing Reinforced Concrete Structures, Stirrup and Tie Dimensions.

Actual bar lengths are measured along centerline of bar to the nearest inch.

Minimum clearance to reinforcing shall be 1".

All bar reinforcement shall be Grade 60.

Welded Wire Reinforcement (WWR) shall be in accordance with AASHTO M 221.

The two D1 bars may be furnished as one bar at the fabricator's option.

All B1 bars shall be epoxy coated.

Miscellaneous:

Cost of 3/4"Ø coil tie rods placed in diaphragms will be considered completely covered by the contract unit price for Prestressed Concrete NU-Girder.

Coil ties shall be held in place in the forms by slotted wire-setting-studs projecting thru forms. Studs are to be left in place or replaced with temporary plugs until girders are erected, then replaced by coil tie rods.

The contractor shall provide bracing necessary for lateral and torsional stability of the girders during construction of the concrete slab and remove the bracing after the slab has attained 75% design strength. Contractor shall not drill holes in the girders. The cost for furnishing, installing, and removing bracing will be considered completely covered by the contract unit price for Prestressed Concrete NU-Girder.

For location of coil ties and #6 bars at concrete bent diaphragms, see Sheets No. 5,6, and 16.

For Girder Camber Diagram, see Sheet No. 17.

Alternate bar reinforcing steel details are provided and may be used. The same type of reinforcing steel shall be used for all girders in all spans.

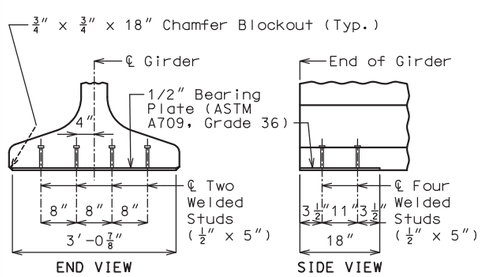

END VIEW SIDE VIEW

BEARING PLATE DETAILS

Galvanize the 1/2" bearing plate (ASTM A709 Grade 36) in accordance with ASTM A123.

Cost of furnishing, galvanizing, and installing the 1/2" bearing plate (ASTM A709 Grade 36) and welded studs in the prestressed girder will be considered completely covered by the contract unit price for Prestressed Concrete NU-Girder.

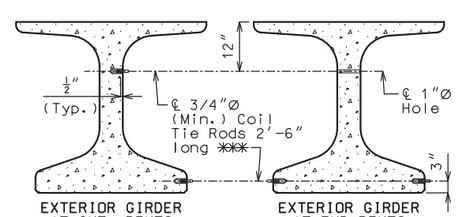

EXTERIOR GIRDER AT INT. BENTS

EXTERIOR GIRDER AT END BENTS INTERIOR GIRDER AT ALL BENTS

DETAILS OF COIL TIES

Cast 1"Ø hole horizontally in girder for #6 bar 5'-6" long and clear reinforcing steel or strands by 1 1/2" minimum.

✱✱✱ Length of coil tie rods at exterior face of exterior girders at end bents = 2'-2".

ALTERNATE BAR REINFORCING STEEL DETAILS

Note: This drawing is not to scale. Follow dimensions.

DESIGNED BY:	KLW	4/2020
DETAILED BY:	RCL	5/2020
CHECKED BY:	MAH	5/2020

Sheet No. 13 of 31

STATE OF MISSOURI — KEITH LAWRENCE WETTER — NUMBER E-25019 — REGISTERED PROFESSIONAL ENGINEER

THIS SHEET HAS BEEN SIGNED, SEALED AND DATED ELECTRONICALLY

DATE PREPARED: 7/10/2020

ROUTE: I-49 | STATE: MO

DISTRICT: BR | SHEET NO.: 13

COUNTY: VERNON

JOB NO.: J7I3363

CONTRACT ID.

PROJECT NO.

BRIDGE NO.: A8806

DESCRIPTION | DATE

MISSOURI HIGHWAYS AND TRANSPORTATION COMMISSION

105 WEST CAPITOL
JEFFERSON CITY, MO 65102
1-888-ASK-MODOT (1-888-275-6636)

LOCHNER
16105 W. 113th Street | Suite 107 | Lenexa, KS 66219
Certificate of Authority #F00727076

REV.

B_A8806_013_J7I3363_NU GIRDER BARS_END SPAN.dgn 4:10:08 PM 7/9/2020

Concrete for prestressed girders shall be Class A-1 with f'c = 8000 psi and f'ci = 6500 psi.

(+) indicates prestressing strand.

Use 42 strands with an initial prestress force of 1845.6 kips.

Prestressing tendons shall be uncoated, seven-wire, low-relaxation strands, 0.6 inch diameter in accordance with AASHTO M 203, Grade 270. Pretensioned members shall be in accordance with Sec 1029.

Fabricator shall be responsible for location and design of lifting devices.

✱ Girder top flange shall be steel troweled to a smooth finish for 8" at the edges, as shown. Apply two layers of 30-lb roofing felt as a bond breaker to this region only. The center portion shall be rough finished by scarifying the surface transversely with a wire brush, and no laitance shall remain on the surface.

✱✱ At the contractor's option the location for bent-up strands may be varied from that shown for fully bonded strands only. The total number of bent-up strands shall not be changed. One strand tie bar is required for each layer of bent-up strands except at end bents which require one bar on the bottom layer of strands only. No additional payment will be made if additional strand tie bars are required.

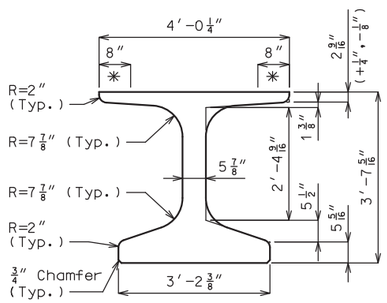

DIMENSIONS

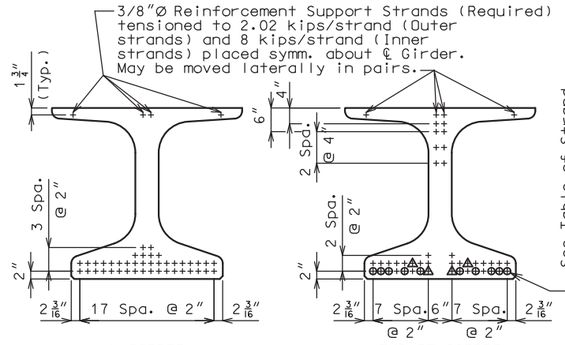

℄ GIRDER END OF GIRDER

STRAND ARRANGEMENTS

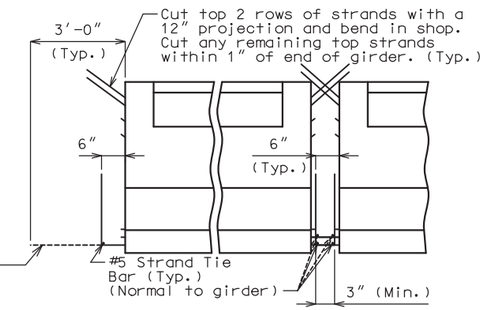

INTERMEDIATE BENT

STRAND DETAILS AT GIRDER ENDS

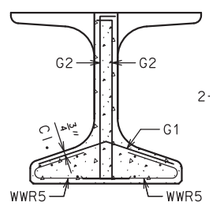

SECTION A-A

Strands not shown for clarity.

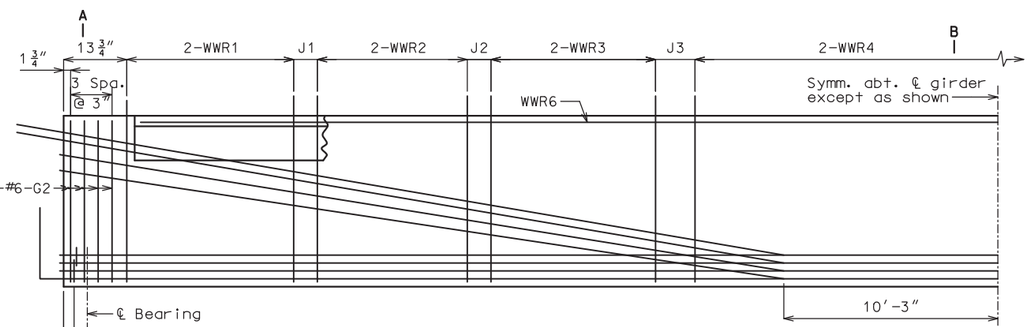

HALF ELEVATION OF GIRDER SPAN (2-3)

Exterior and interior girders are the same, except for coil ties, and top flange blockout. Reinforcement support strands not shown for clarity.

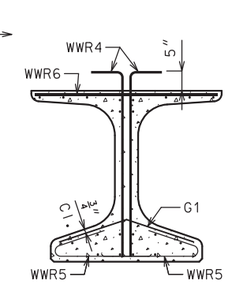

SECTION B-B

Strands not shown for clarity.

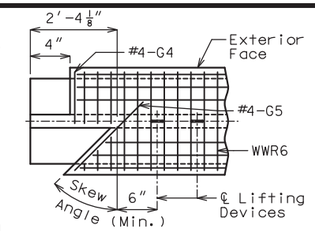

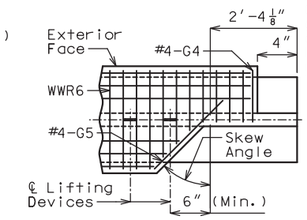

LEFT EXTERIOR GIRDER AT INTERMEDIATE BENT (ROTATE 180° FOR RIGHT EXTERIOR)

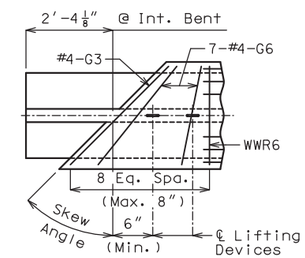

INTERIOR GIRDER AT ALL BENTS

TOP FLANGE BLOCKOUT

BILL OF REINFORCING STEEL - EACH GIRDER			
NO.	SIZE & MARK	ACTUAL LENGTH	SHAPE
123	3 G1	2'-10"	8
16	6 G2	4'-4"	11
2	4 G3	5'-5"	20
2	4 G4	2'-1"	20
2	4 G5	3'-9"	20
14	4 G6	Varies	20

BENDING DIAGRAMS

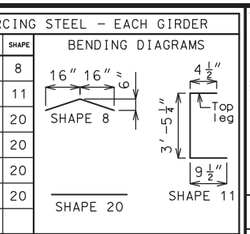

G4 and G5 not required for interior girders. G3 and G6 not required for exterior girders of intermediate spans. Half no. of G3, G4, G5 and G6 not required for ext. girders of end spans.

WELDED WIRE REINFORCEMENT - EACH GIRDER				
MARK	WIRE SIZE	S	L	J
WWR1	D31	3"	3'-9"	8"
WWR2	D31	8"	7'-4"	11 3/4"
WWR3	D31	12"	15'-0"	12"
WWR4	D31	16"	42'-8"	–

BENDING DIAGRAMS

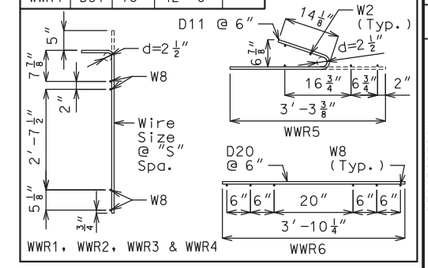

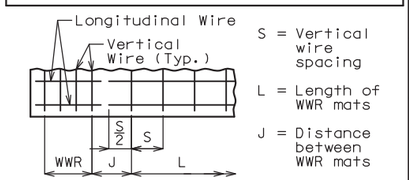

WELDED WIRE PLACEMENT

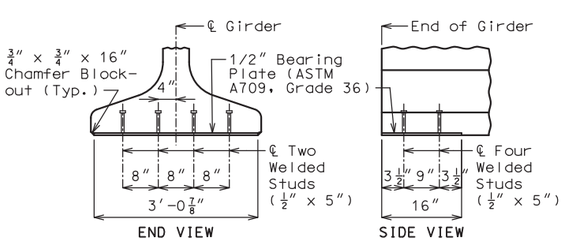

END VIEW SIDE VIEW

BEARING PLATE DETAILS

Galvanize the 1/2" bearing plate (ASTM A709 Grade 36) in accordance with ASTM A123.

Cost of furnishing, galvanizing, and installing the 1/2" bearing plate (ASTM A709 Grade 36) and welded studs in the prestressed girder will be considered completely covered by the contract unit price for Prestressed Concrete NU-Girder.

TABLE OF STRAND INSTRUCTIONS	
⊕	Cut and shop bend with 3'-0" projection ✱✱
⚠	Strands debonded for 4'-0" from end of beam.

All strands are fully bonded unless otherwise noted.

Cut any non-projected strands within 1" of end of girder.

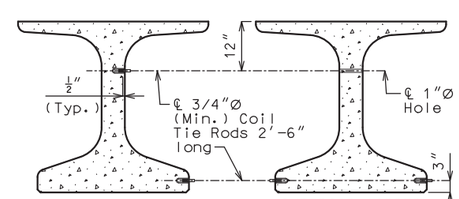

EXTERIOR GIRDER AT INT. BENTS INTERIOR GIRDER AT ALL BENTS

DETAILS OF COIL TIES

Cast 1"Ø hole horizontally in girder for #6 bar 5'-6" long and clear reinforcing steel or strands by 1 1/2" minimum.

General Notes:

Reinforcing Steel:

All dimensions are out to out.

Hooks and bends shall be in accordance with the CRSI Manual of Standard Practice for Detailing Reinforced Concrete Structures, Stirrup and Tie Dimensions.

Actual bar lengths are measured along centerline of bar to the nearest inch.

Minimum clearance to reinforcing shall be 1", unless otherwise shown.

All bar reinforcement shall be Grade 60.

Welded Wire Reinforcement (WWR) shall be in accordance with AASHTO M 221. WWR shall not be epoxy coated.

Miscellaneous:

Cost of 3/4"Ø coil tie rods placed in diaphragms will be considered completely covered by the contract unit price for Prestressed Concrete NU-Girder.

Coil ties shall be held in place in the forms by slotted wire-setting-studs projecting thru forms. Studs are to be left in place or replaced with temporary plugs until girders are erected, then replaced by coil tie rods.

The contractor shall provide bracing necessary for lateral and torsional stability of the girders during construction of the concrete slab and remove the bracing after the slab has attained 75% design strength. Contractor shall not drill holes in the girders. The cost for furnishing, installing, and removing bracing will be considered completely covered by the contract unit price for Prestressed Concrete NU-Girder.

For location of coil ties and #6 bars at concrete bent diaphragms, see Sheet No. 16.

For Girder Camber Diagram, see Sheet No. 17.

Alternate bar reinforcing steel details are provided and may be used. The same type of reinforcing steel shall be used for all girders in all spans.

Sheet No. 14 of 31

DESIGNED BY:	KLW 4/2020
DETAILED BY:	JTC 5/2020
CHECKED BY:	MAH 5/2020

Note: This drawing is not to scale. Follow dimensions.

STATE OF MISSOURI — KEITH LAWRENCE WETTER — NUMBER E-25019 — REGISTERED PROFESSIONAL ENGINEER

THIS SHEET HAS BEEN SIGNED, SEALED AND DATED ELECTRONICALLY

DATE PREPARED	7/10/2020
ROUTE	I-49
STATE	MO
DISTRICT	BR
SHEET NO.	14
COUNTY	VERNON
JOB NO.	J7I3363
CONTRACT ID.	
PROJECT NO.	
BRIDGE NO.	A8806

DESCRIPTION

DATE

MISSOURI HIGHWAYS AND TRANSPORTATION COMMISSION

105 WEST CAPITOL
JEFFERSON CITY, MO 65102
1-888-ASK-MODOT (1-888-275-6636)

LOCHNER
16105 W. 113th Street | Suite 107 | Lenexa, KS 66219
Certificate of Authority #F00727076

REV.

B_A8806_014_J7I3363_NU GIRDER WWF_CENTER SPAN.dgn 4:10:43 PM 7/9/2020

Concrete for prestressed girders shall be Class A-1 with f'c = 8000 psi and f'ci = 6500 psi.

(+) indicates prestressing strand.

Use 42 strands with an initial prestress force of 1845.6 kips.

Prestressing tendons shall be uncoated, seven-wire, low-relaxation strands, 0.6 inch diameter in accordance with AASHTO M 203, Grade 270. Pretensioned members shall be in accordance with Sec 1029.

Fabricator shall be responsible for location and design of lifting devices.

✱ Girder top flange shall be steel troweled to a smooth finish for 8″ at the edges, as shown. Apply two layers of 30-lb roofing felt as a bond breaker to this region only. The center portion shall be rough finished by scarifying the surface transversely with a wire brush, and no laitance shall remain on the surface.

✱✱ At the contractor's option the location for bent-up strands may be varied from that shown for fully bonded strands only. The total number of bent-up strands shall not be changed. One strand tie bar is required for each layer of bent-up strands except at end bents which require one bar on the bottom layer of strands only. No additional payment will be made if additional strand tie bars are required.

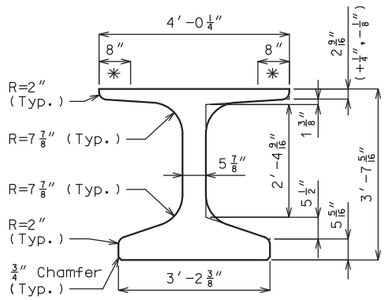

DIMENSIONS

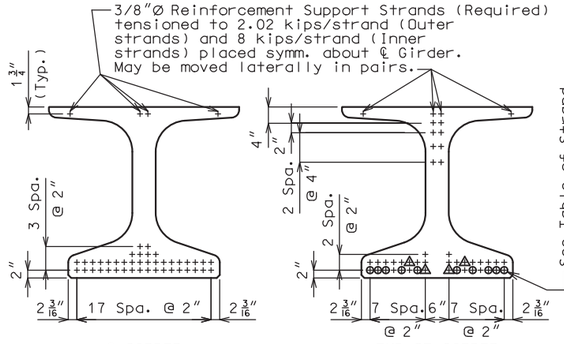

℄ GIRDER END OF GIRDER

STRAND ARRANGEMENTS

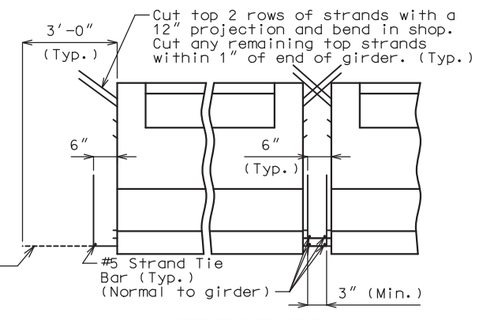

INTERMEDIATE BENT

STRAND DETAILS AT GIRDER ENDS

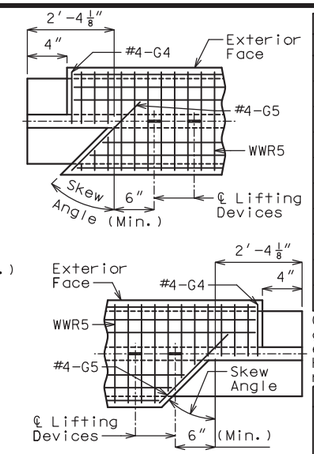

LEFT EXTERIOR GIRDER AT INTERMEDIATE BENT (ROTATE 180° FOR RIGHT EXTERIOR)

BILL OF REINFORCING STEEL - EACH GIRDER			
NO.	SIZE & MARK	ACTUAL LENGTH	SHAPE
294	5 B1	5′-0″	11
16	6 B2	4′-4″	11
294	4 D1	4′-0″	9
2	4 G3	5′-5″	20
2	4 G4	2′-1″	20
2	4 G5	3′-9″	20
14	4 G6	Varies	20

BENDING DIAGRAMS

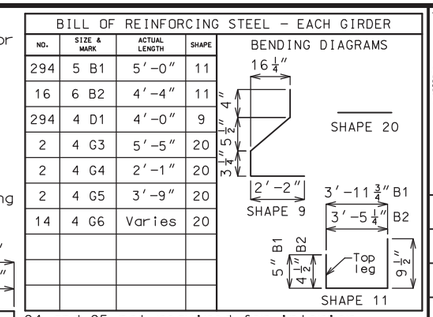

G4 and G5 not required for interior girders. G3 and G6 not required for exterior girders of intermediate spans. Half no. of G3, G4, G5 and G6 not required for ext. girders of end spans.

WELDED WIRE REINFORCEMENT - EACH GIRDER

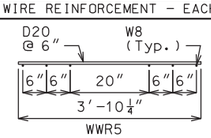

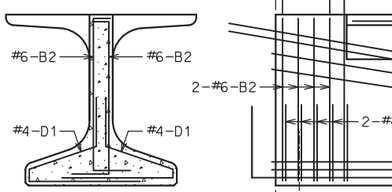

SECTION A-A

Strands not shown for clarity.

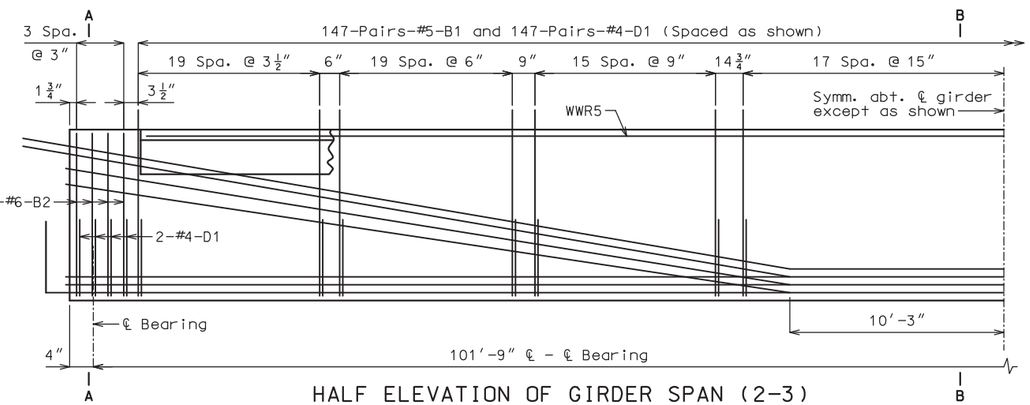

HALF ELEVATION OF GIRDER SPAN (2-3)

Exterior and interior girders are the same, except for coil ties, and top flange blockout. Reinforcement support strands not shown for clarity.

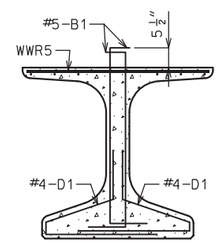

SECTION B-B

Strands not shown for clarity.

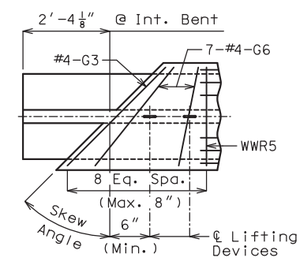

INTERIOR GIRDER AT ALL BENTS

TOP FLANGE BLOCKOUT

General Notes:

Reinforcing Steel:

All dimensions are out to out.

Hooks and bends shall be in accordance with the CRSI Manual of Standard Practice for Detailing Reinforced Concrete Structures, Stirrup and Tie Dimensions.

Actual bar lengths are measured along centerline of bar to the nearest inch.

Minimum clearance to reinforcing shall be 1″.

All bar reinforcement shall be Grade 60.

Welded Wire Reinforcement (WWR) shall be in accordance with AASHTO M 221.

The two D1 bars may be furnished as one bar at the fabricator's option.

All B1 bars shall be epoxy coated.

Miscellaneous:

Cost of 3/4″Ø coil tie rods placed in diaphragms will be considered completely covered by the contract unit price for Prestressed Concrete NU-Girder.

Coil ties shall be held in place in the forms by slotted wire-setting-studs projecting thru forms. Studs are to be left in place or replaced with temporary plugs until girders are erected, then replaced by coil tie rods.

The contractor shall provide bracing necessary for lateral and torsional stability of the girders during construction of the concrete slab and remove the bracing after the slab has attained 75% design strength. Contractor shall not drill holes in the girders. The cost for furnishing, installing, and removing bracing will be considered completely covered by the contract unit price for Prestressed Concrete NU-Girder.

For location of coil ties and #6 bars at concrete bent diaphragms, see Sheet No. 16.

For Girder Camber Diagram, see Sheet No. 17.

Alternate bar reinforcing steel details are provided and may be used. The same type of reinforcing steel shall be used for all girders in all spans.

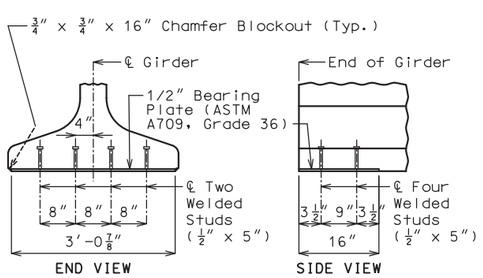

END VIEW SIDE VIEW

BEARING PLATE DETAILS

Galvanize the 1/2″ bearing plate (ASTM A709 Grade 36) in accordance with ASTM A123.

Cost of furnishing, galvanizing, and installing the 1/2″ bearing plate (ASTM A709 Grade 36) and welded studs in the prestressed girder will be considered completely covered by the contract unit price for Prestressed Concrete NU-Girder.

TABLE OF STRAND INSTRUCTIONS	
⊕	Cut and shop bend with 3′-0″ projection ✱✱
◬	Strands debonded for 4′-0″ from end of beam.

All strands are fully bonded unless otherwise noted.

Cut any non-projected strands within 1″ of end of girder.

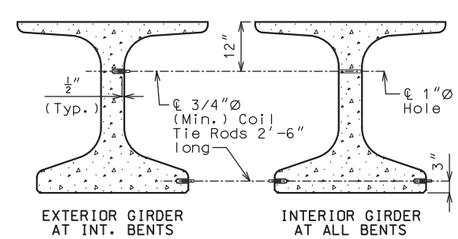

EXTERIOR GIRDER AT INT. BENTS INTERIOR GIRDER AT ALL BENTS

DETAILS OF COIL TIES

Cast 1″Ø hole horizontally in girder for #6 bar 5′-6″ long and clear reinforcing steel or strands by 1 1/2″ minimum.

DESIGNED BY: KLW	4/2020	
DETAILED BY: JTC	5/2020	
CHECKED BY: MAH	5/2020	

ALTERNATE BAR REINFORCING STEEL DETAILS

Note: This drawing is not to scale. Follow dimensions.

STATE OF MISSOURI — KEITH LAWRENCE WETTER — NUMBER E-25019 — REGISTERED PROFESSIONAL ENGINEER

THIS SHEET HAS BEEN SIGNED, SEALED AND DATED ELECTRONICALLY

DATE PREPARED	
7/10/2020	
ROUTE	STATE
I-49	MO
DISTRICT	SHEET NO.
BR	15
COUNTY	
VERNON	
JOB NO.	
J7I3363	
CONTRACT ID.	
PROJECT NO.	
BRIDGE NO.	
A8806	

DESCRIPTION DATE REV.

MISSOURI HIGHWAYS AND TRANSPORTATION COMMISSION

105 WEST CAPITOL JEFFERSON CITY, MO 65102 1-888-ASK-MODOT (1-888-275-6636)

LOCHNER 16105 W. 113th Street | Suite 107 | Lenexa, KS 66219

Certificate of Authority #F00727076

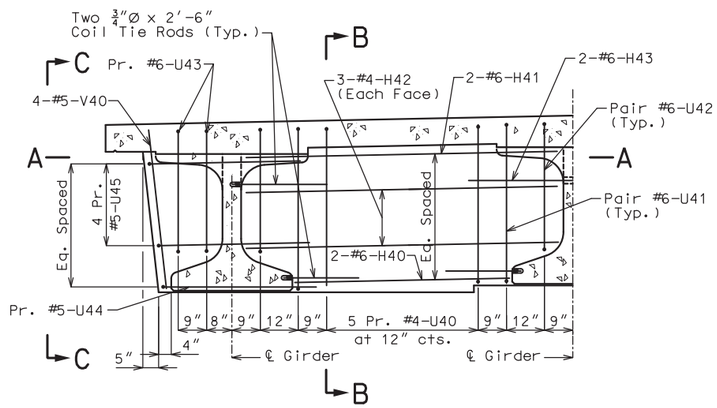

PART SECTION NEAR INT. BENTS
(Normal to centerline of girders)

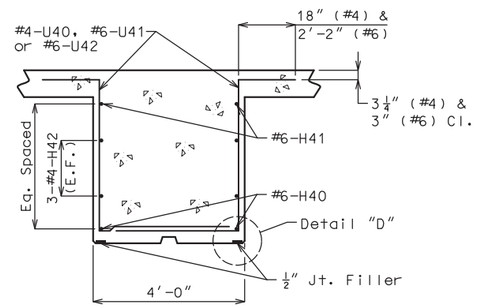

SECTION B-B

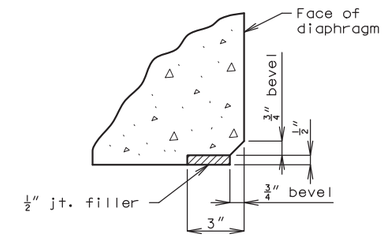

DETAIL "D"

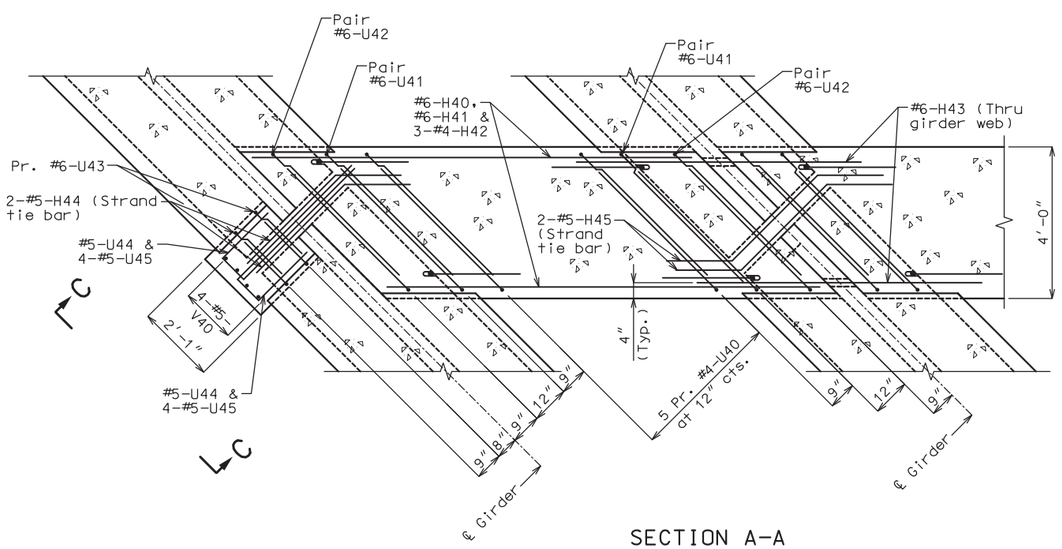

SECTION A-A

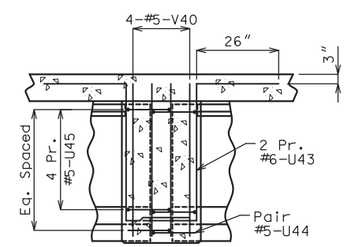

SECTION C-C

Notes:

Diaphragms at intermediate bents shall be built vertical.

For location of #5-H33 & #5-H34 (Strand tie bars) and coil tie rods, see Sheets No. 14-15.

All U-bars in diaphragm are to be placed parallel to ℄ Roadway.

DESIGNED BY:	KLW	5/2020
DETAILED BY:	JTC	5/2020
CHECKED BY:	JCG	5/2020

Note: This drawing is not to scale. Follow dimensions.

STATE OF MISSOURI
KEITH LAWRENCE WETTER
NUMBER E-25019
REGISTERED PROFESSIONAL ENGINEER

THIS SHEET HAS BEEN SIGNED, SEALED AND DATED ELECTRONICALLY

DATE PREPARED	
7/10/2020	
ROUTE	STATE
I-49	MO
DISTRICT	SHEET NO.
BR	16
COUNTY	
VERNON	
JOB NO.	
J7I3363	
CONTRACT ID.	
PROJECT NO.	
BRIDGE NO.	
A8806	

DESCRIPTION	DATE

MISSOURI HIGHWAYS AND TRANSPORTATION COMMISSION
105 WEST CAPITOL
JEFFERSON CITY, MO 65102
1-888-ASK-MODOT (1-888-275-6636)

LOCHNER
16105 W. 113th Street | Suite 107 | Lenexa, KS 66219
Certificate of Authority #F00727076

REV.

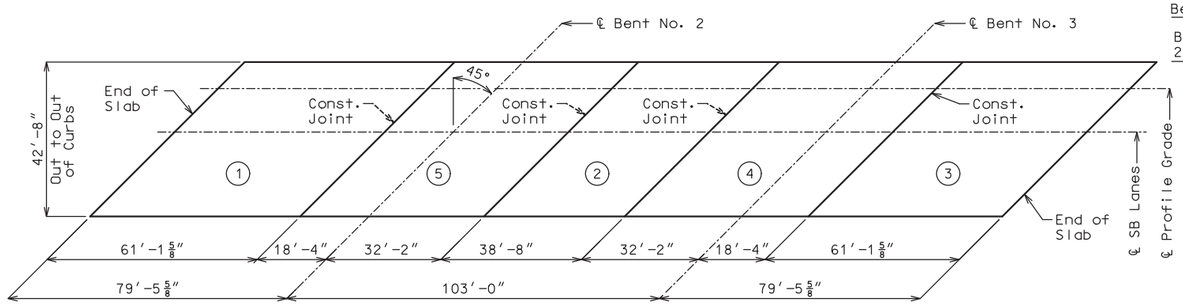

SPAN (1-2) SPAN (2-3) SPAN (3-4)

PLAN OF POURING SEQUENCE

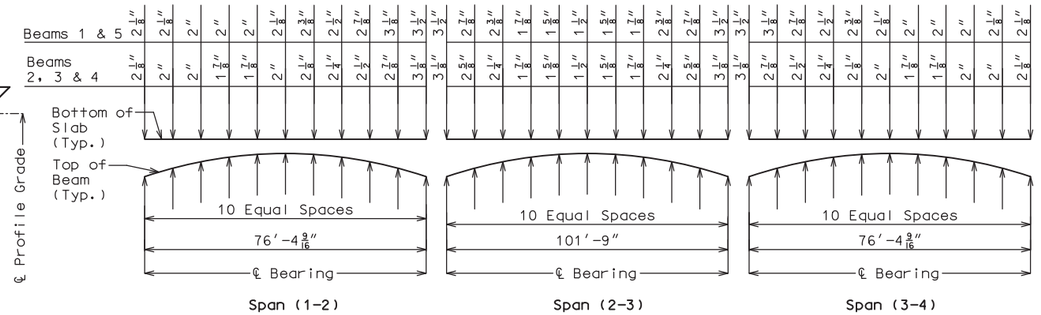

THEORETICAL SLAB HAUNCHING DIAGRAM

	Sequence of Pours					Min. Rate of Pour Cu. Yds./Hr.
	Direction					With Retarder
Basic Sequence	1	2	3	4	5	25
	Either Direction					
Alternate pours to the basic skip sequence are subject to the approval of the engineer in accordance with Sec 703.						
Alternate A Pours	1	5 + 2	4 + 3			35
	End to 5	1 to 4	2 to End			
Alternate B Pours	1 + 5 + 2	4 + 3				35
	End to 4	2 to End				
Alternate C Pours	1 + 5 + 2 + 4 + 3					35
	End to End					

The contractor shall furnish an approved retarder to retard the set of the concrete to 2.5 hours, and shall pour and satisfactorily finish the slab pours at the rate given.

The concrete diaphragm at the intermediate bents and integral end bents shall be poured a minimum of 30 minutes and a maximum of 2 hours before the slab is poured.

SLAB POURING SEQUENCE

Theoretical Bottom of Slab Elevations at Centerline of Girder (Prior to forming for slab) (Estimated at 90 days)

Beam Number	Span (1-2)										
	℄ Brg.	.10	.20	.30	.40	.50	.60	.70	.80	.90	℄ Brg.
1	924.67	924.74	924.80	924.86	924.91	924.95	924.98	925.00	925.01	925.02	925.02
2	924.79	924.86	924.93	924.99	925.04	925.08	925.12	925.14	925.16	925.17	925.17
3	924.83	924.91	924.98	925.04	925.09	925.14	925.17	925.20	925.22	925.23	925.24
4	924.59	924.66	924.74	924.80	924.86	924.91	924.95	924.98	925.00	925.01	925.02
5	924.34	924.42	924.50	924.56	924.62	924.68	924.72	924.75	924.77	924.79	924.80
Beam Number	Span (2-3)										
	℄ Brg.	.10	.20	.30	.40	.50	.60	.70	.80	.90	℄ Brg.
1	925.02	925.12	925.21	925.28	925.32	925.34	925.34	925.31	925.27	925.20	925.12
2	925.18	925.29	925.38	925.46	925.52	925.55	925.54	925.52	925.46	925.39	925.31
3	925.24	925.36	925.46	925.54	925.60	925.63	925.63	925.61	925.56	925.50	925.41
4	925.03	925.15	925.25	925.34	925.40	925.43	925.44	925.42	925.38	925.31	925.24
5	924.81	924.92	925.02	925.11	925.17	925.20	925.22	925.20	925.17	925.12	925.06
Beam Number	Span (3-4)										
	℄ Brg.	.10	.20	.30	.40	.50	.60	.70	.80	.90	℄ Brg.
1	925.12	925.13	925.14	925.14	925.14	925.12	925.09	925.06	925.02	924.97	924.91
2	925.31	925.32	925.34	925.34	925.34	925.32	925.30	925.27	925.23	925.18	925.13
3	925.41	925.43	925.45	925.45	925.45	925.44	925.42	925.39	925.36	925.31	925.26
4	925.24	925.26	925.27	925.28	925.29	925.28	925.26	925.23	925.20	925.16	925.11
5	925.06	925.08	925.10	925.11	925.12	925.11	925.10	925.07	925.04	925.00	924.96

Elevations are based on a constant slab thickness of 8 1/2″ and include allowance for theoretical dead load deflections due to weight of slab and barrier.

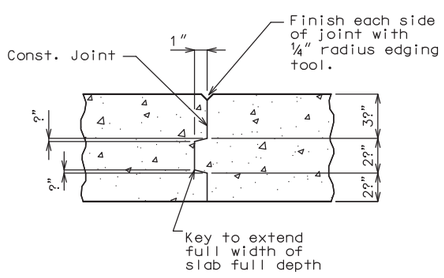

FULL DEPTH SLAB SLAB CONSTRUCTION JOINT DETAILS

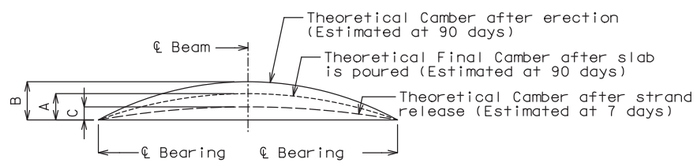

Beam	Span (1-2) & (3-4)			Span (2-3)		
	A	B	C	A	B	C
Exterior	1″	1 7/8″	1″	2 5/8″	5 1/4″	3″
Interior	1″			2 1/4″		

BEAM CAMBER DIAGRAM

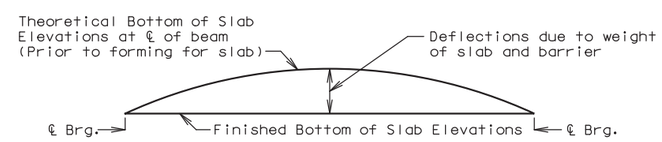

TYPICAL SLAB ELEVATIONS DIAGRAM

Notes:

If beam camber is different from that shown in the camber diagram, in order to maintain minimum slab thickness, adjustment of the slab haunches, an increase in slab thickness or a raise in grade uniformly throughout the structure shall be necessary. No payment will be made for additional labor or materials required for variation in haunching, slab thickness or grade adjustment.

Concrete in the slab haunches is included in the Estimated Quantities for Slab on Concrete Beam.

SLAB HAUNCH AND POURING SEQUENCE

DESIGNED BY:	JCG	4/2020
DETAILED BY:	RCL	4/2020
CHECKED BY:	DMA	5/2020

Note: This drawing is not to scale. Follow dimensions.

STATE OF MISSOURI
KEITH LAWRENCE WETTER
NUMBER E-25019
REGISTERED PROFESSIONAL ENGINEER

THIS SHEET HAS BEEN SIGNED, SEALED AND DATED ELECTRONICALLY

DATE PREPARED 7/10/2020

ROUTE	STATE
I-49	MO
DISTRICT	SHEET NO.
BR	17

COUNTY VERNON

JOB NO. J7I3363

CONTRACT ID.

PROJECT NO.

BRIDGE NO. A8806

DESCRIPTION

DATE

REV.

MISSOURI HIGHWAYS AND TRANSPORTATION COMMISSION
105 WEST CAPITOL
JEFFERSON CITY, MO 65102
1-888-ASK-MODOT (1-888-275-6636)

LOCHNER
16105 W. 113th Street | Suite 107 | Lenexa, KS 66219
Certificate of Authority #F00727076

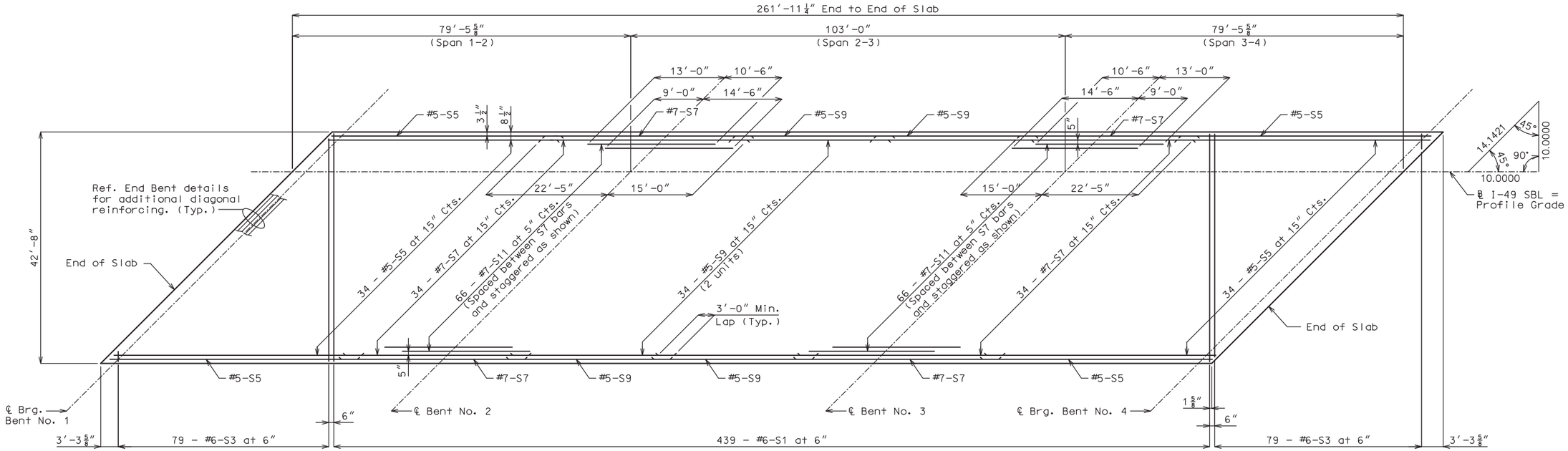

SLAB PLAN SHOWING TOP REINFORCEMENT

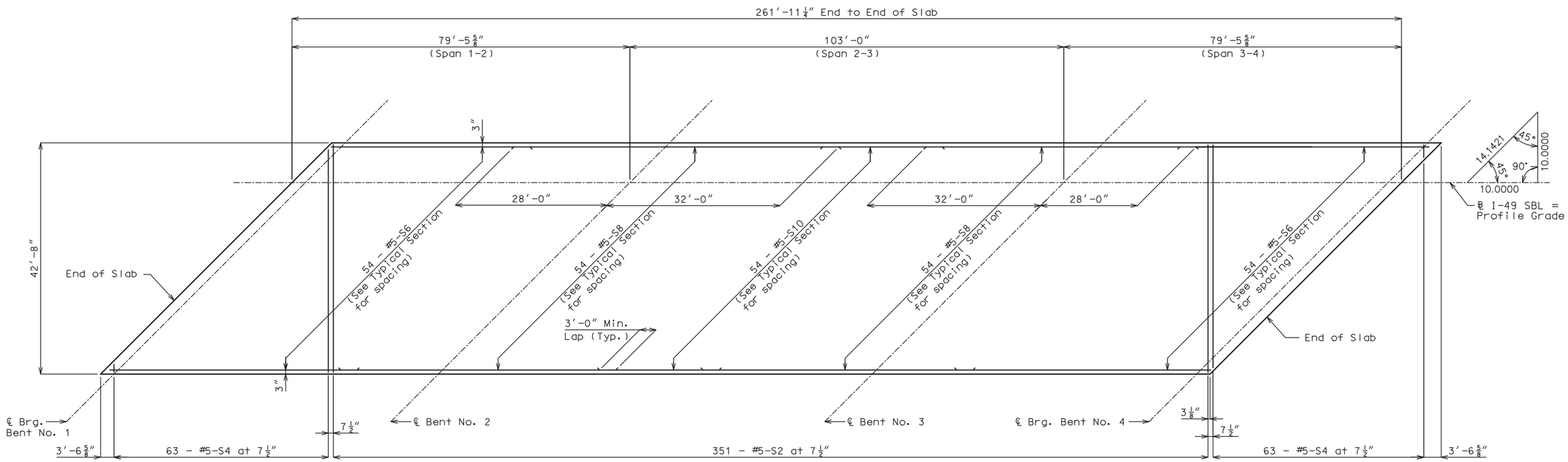

SLAB PLAN SHOWING BOTTOM REINFORCEMENT

Note:
Longitudinal dimensions are horizontal.

SLAB PLAN

DESIGNED BY:	JCG	4/2020
DETAILED BY:	JTC	4/2020
CHECKED BY:	DMA	5/2020

Note: This drawing is not to scale. Follow dimensions.

Sheet No. 18 of 31

STATE OF MISSOURI
KEITH LAWRENCE WETTER
NUMBER E-25019
REGISTERED PROFESSIONAL ENGINEER

THIS SHEET HAS BEEN SIGNED, SEALED AND DATED ELECTRONICALLY

DATE PREPARED 7/10/2020

ROUTE	STATE
I-49	MO
DISTRICT	SHEET NO.
BR	18

COUNTY: VERNON

JOB NO. J7I3363

CONTRACT ID.

PROJECT NO.

BRIDGE NO. A8806

DESCRIPTION

DATE

MISSOURI HIGHWAYS AND TRANSPORTATION COMMISSION
105 WEST CAPITOL
JEFFERSON CITY, MO 65102
1-888-ASK-MODOT (1-888-275-6636)

LOCHNER
16105 W. 113th Street | Suite 107 | Lenexa, KS 66219
Certificate of Authority #F00727076

REV.

B_A8806_018_J7I3363_SLAB_PLAN.dgn 4:12:16 PM 7/9/2020

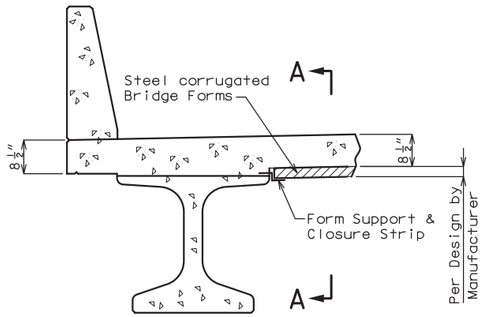

SECTION

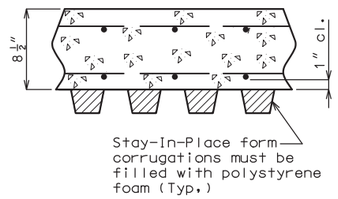

SECTION A-A

METAL STAY-IN-PLACE FORMS (Optional)

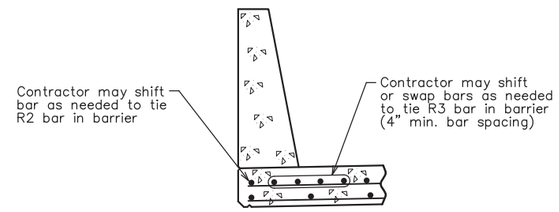

OPTIONAL SHIFTING TOP BARS AT BARRIER

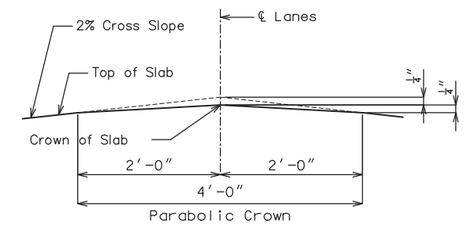

DETAIL A

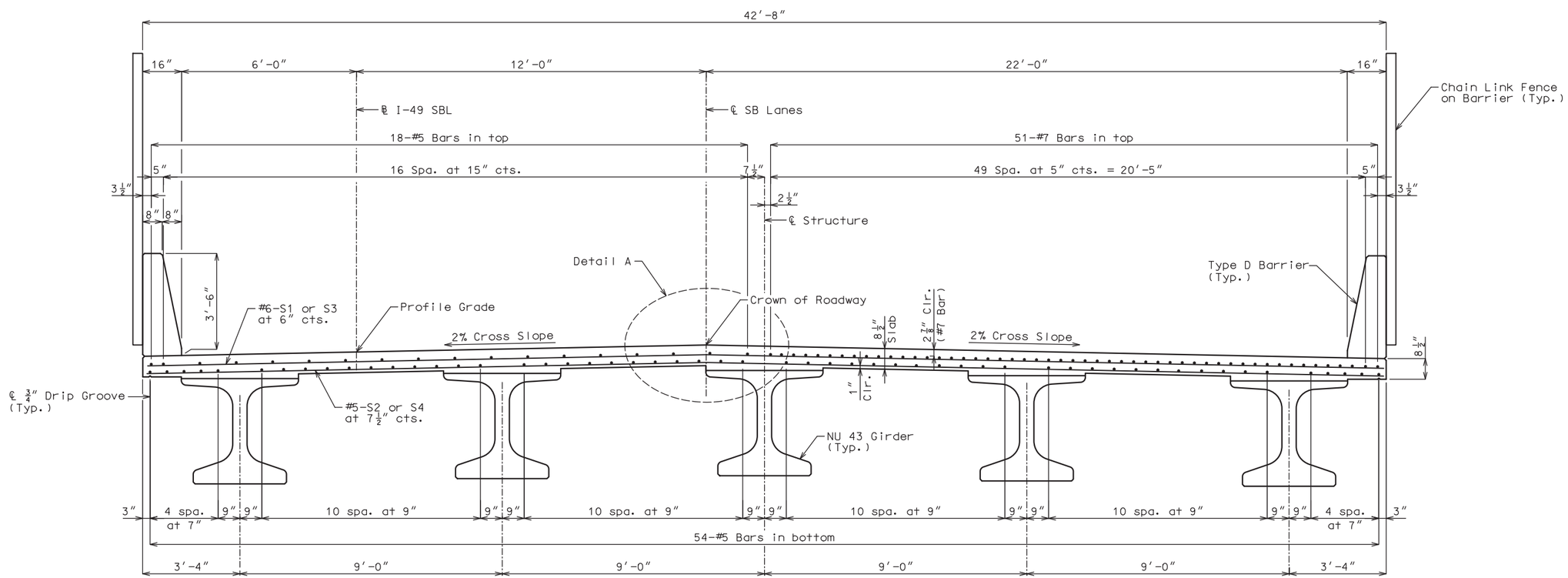

HALF SECTION NEAR MIDSPAN

HALF SECTION NEAR INTERMEDIATE BENT

TYPICAL SECTION

Notes:

For plan of slab showing reinforcement, see Sheet No. 18.

For details and reinforcement of barrier not shown, see Sheet No. 20.

Note: This drawing is not to scale. Follow dimensions.

Sheet No. 19 of 31

DESIGNED BY:	JCG	4/2020
DETAILED BY:	JTC	4/2020
CHECKED BY:	DMA	5/2020

STATE OF MISSOURI
KEITH LAWRENCE WETTER
NUMBER E-25019
REGISTERED PROFESSIONAL ENGINEER

THIS SHEET HAS BEEN SIGNED, SEALED AND DATED ELECTRONICALLY

DATE PREPARED	
7/10/2020	
ROUTE	STATE
I-49	MO
DISTRICT	SHEET NO.
BR	19
COUNTY	
VERNON	
JOB NO.	
J7I3363	
CONTRACT ID.	
PROJECT NO.	
BRIDGE NO.	
A8806	

DESCRIPTION

DATE

MISSOURI HIGHWAYS AND TRANSPORTATION COMMISSION
105 WEST CAPITOL
JEFFERSON CITY, MO 65102
1-888-ASK-MODOT (1-888-275-6636)

LOCHNER
16105 W. 113th Street | Suite 107 | Lenexa, KS 66219
Certificate of Authority #F00727076

REV.

B_A8806_019_J7I3363_SLAB_TYPICAL SECTION.dgn 4:12:33 PM 7/9/2020

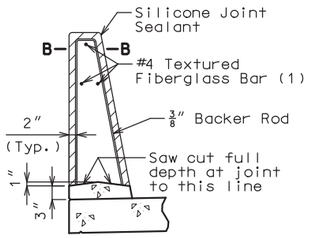

SECTION THRU SAW CUT JOINT

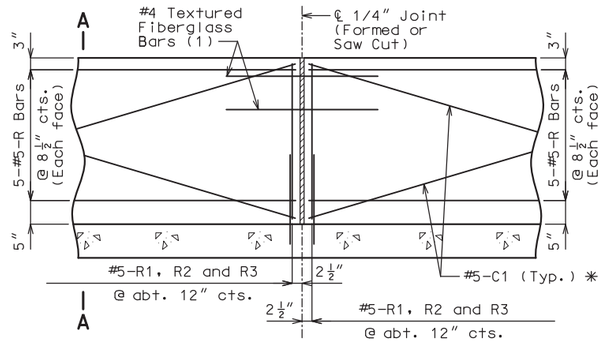

PART ELEVATION OF BARRIER

(1) Four feet long, centered on joint, slip-formed option only

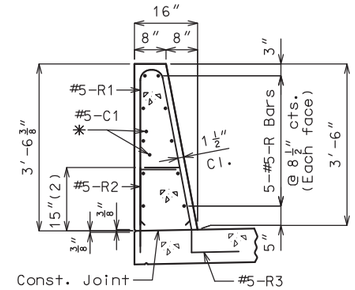

SECTION A-A

Use a minimum lap of 3'-1" for #5 horizontal barrier bars.

The cross-sectional area above the slab is 3.52 square feet.

(2) To top of bar

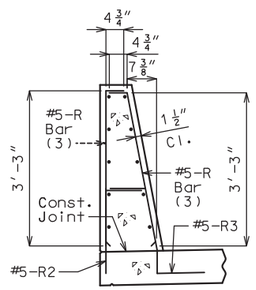

R-BAR PERMISSIBLE ALTERNATE SHAPE

(3) The R1 bar may be separated into two bars as shown, at the contractor's option, only when slip forming is not used. (All dimensions are out to out.)

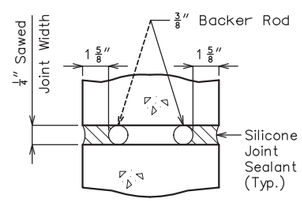

SECTION B-B

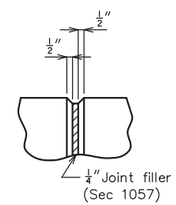

PART ELEVATION AT FORMED JOINT

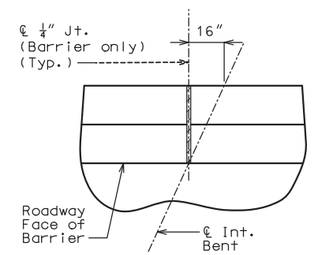

PART PLAN SHOWING JOINT LOCATION

General Notes:

* Slip-formed option only.

Conventional forming or slip forming may be used. Saw cut joints may be used with conventional forming.

Top of barrier shall be built parallel to grade and barrier joints (except at end bents) normal to grade.

All exposed edges of barrier shall have either a 1/2-inch radius or a 3/8-inch bevel, unless otherwise noted.

Payment for all concrete and reinforcement, complete in place, will be considered completely covered by the contract unit price for Type D Barrier per linear foot.

Concrete in barrier shall be Class B-1.

Measurement of barrier is to the nearest linear foot for each structure, measured along the outside top of slab from end of wing to end of wing.

Concrete traffic barrier delineators shall be placed on top of the barrier as shown on Missouri Standard Plan 617.10 and in accordance with Sec 617. Delineators on bridges with two-lane, two-way traffic shall have retroreflective sheeting on both sides. Concrete traffic barrier delineators will be considered completely covered by the contract unit price for Type D Barrier.

Joint sealant and backer rods shall be in accordance with Sec 717 for silicone joint sealant for saw cut and formed joints.

For slip-formed option, both sides of barrier shall have a vertically broomed finish and the top shall have a transversely broomed finish.

For details of fence attachments, see Sheet No. 22.

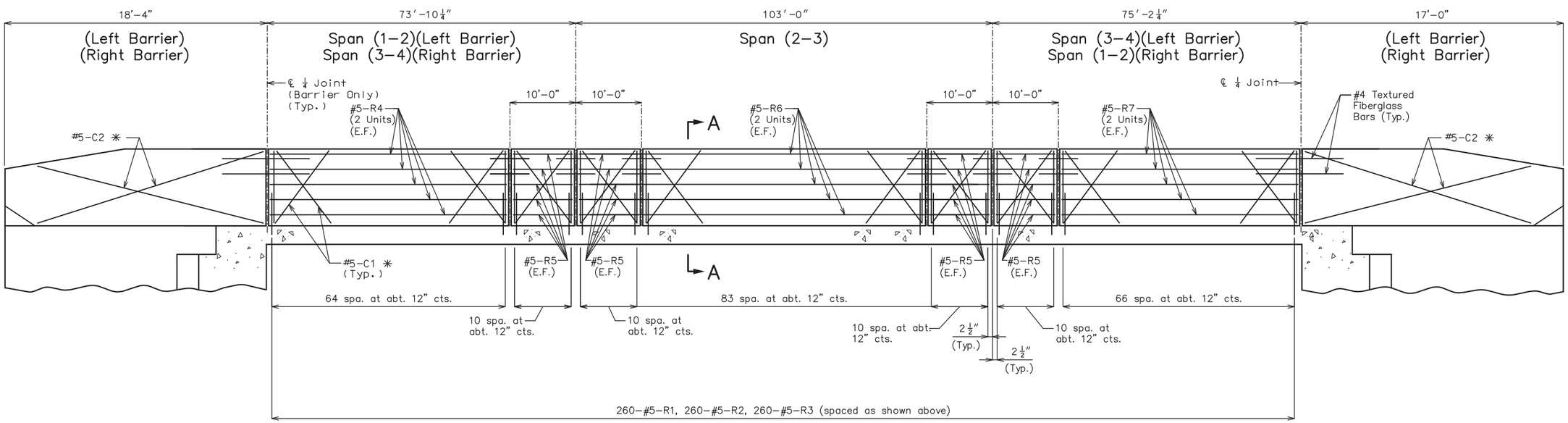

ELEVATION OF TYPE D BARRIER

Longitudinal dimensions are horizontal.

E.F. = Each Face

DESIGNED BY:	KLW	4/2020
DETAILED BY:	JTC	4/2020
CHECKED BY:	DMA	5/2020

Note: This drawing is not to scale. Follow dimensions.

STATE OF MISSOURI
KEITH LAWRENCE WETTER
NUMBER E-25019
REGISTERED PROFESSIONAL ENGINEER

THIS SHEET HAS BEEN SIGNED, SEALED AND DATED ELECTRONICALLY

DATE PREPARED 7/10/2020

ROUTE	STATE
I-49	MO
DISTRICT	SHEET NO.
BR	20

COUNTY: VERNON

JOB NO. J7I3363

CONTRACT ID.

PROJECT NO.

BRIDGE NO. A8806

DATE	DESCRIPTION

MISSOURI HIGHWAYS AND TRANSPORTATION COMMISSION
105 WEST CAPITOL
JEFFERSON CITY, MO 65102
1-888-ASK-MODOT (1-888-275-6636)

LOCHNER
16105 W. 113th Street | Suite 107 | Lenexa, KS 66219
Certificate of Authority #F00727076

REV.

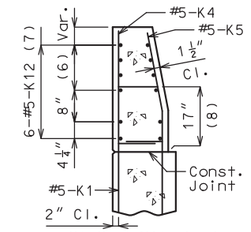

SECTION A-A

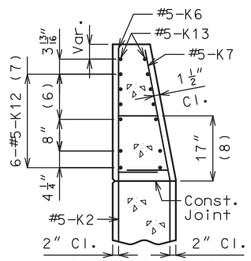

SECTION B-B

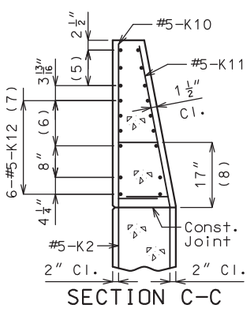

SECTION C-C

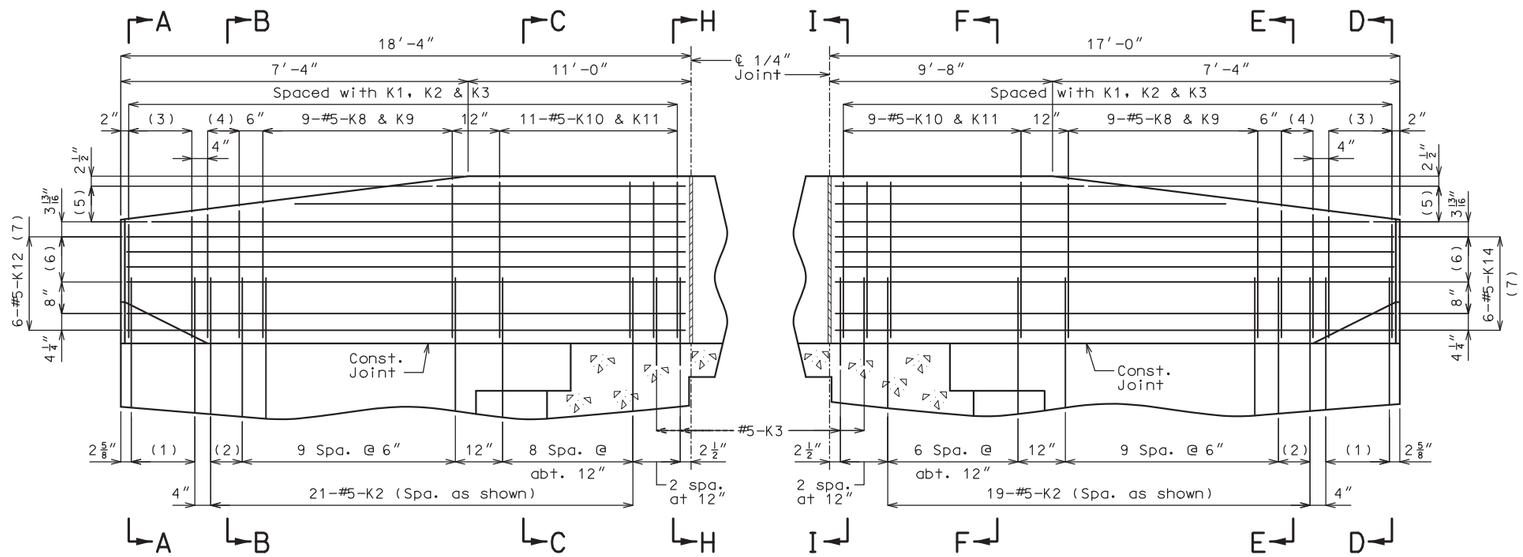

PART ELEVATION

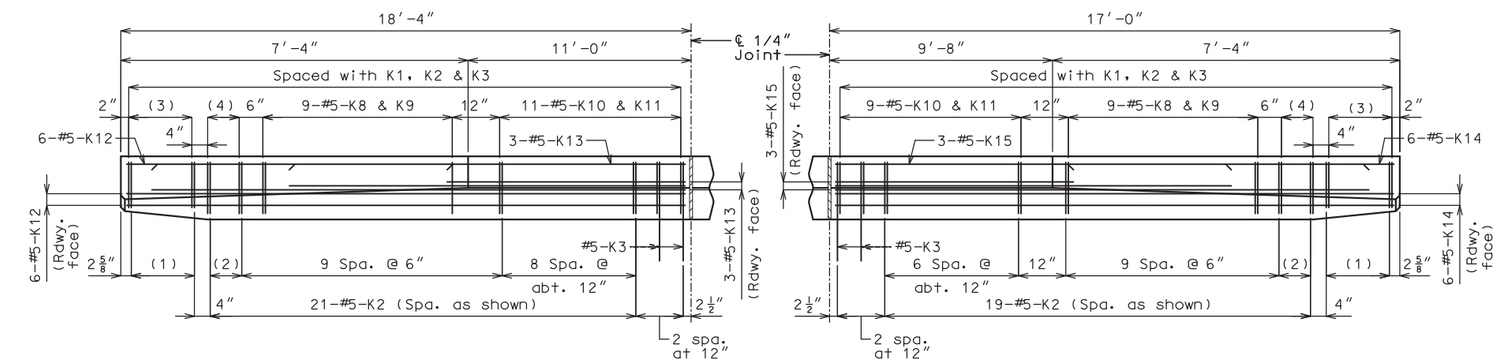

PART PLAN

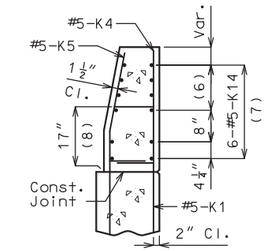

SECTION D-D

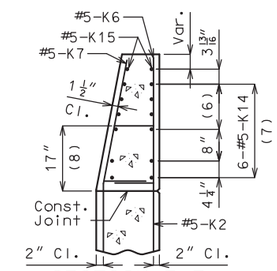

SECTION E-E

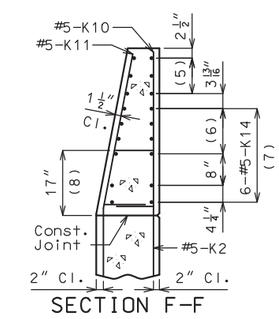

SECTION F-F

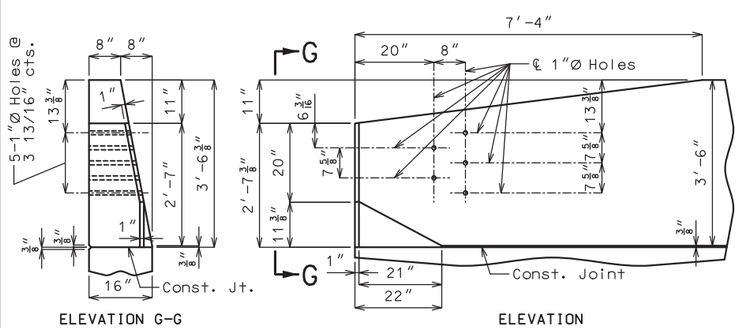

ELEVATION G-G

ELEVATION

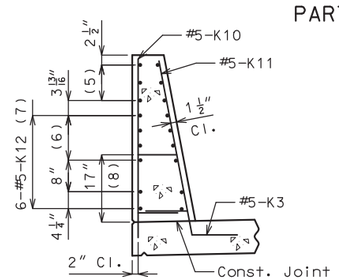

SECTION H-H

(1) 5-#5-K1 @ 4" cts.

(2) 2 spaces @ 4"

(3) 5-#5-K4 & K5

(4) 3-#5-K6 & K7

(5) 3-#5-K13 or K15 @ 4 1/2" cts., each face

(6) 3 spaces @ 3 13/16"

(7) Spaced as shown, each face

(8) To top of bar

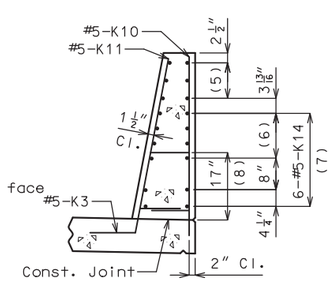

SECTION I-I

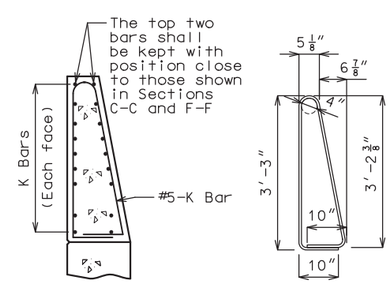

K10-K11 BAR PERMISSIBLE ALTERNATE SHAPE

(Other K bars not shown for clarity)

The K10-K11 bar combination may be furnished as one bar as shown, at the contractor's option.

✳ Transition to zero at Type A curb for gutter lines to match.

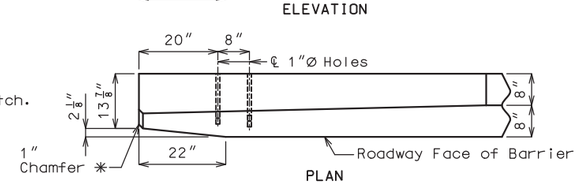

PLAN

DETAILS OF GUARD RAIL ATTACHMENT

General Notes:

Concrete traffic barrier delineators shall be placed on top of the barrier as shown on Missouri Standard Plan 617.10 and in accordance with Sec 617. Delineators on bridges with two-lane, two-way traffic shall have retroreflective sheeting on both sides. Concrete traffic barrier delineators will be considered completely covered by the contract unit price for Type D Barrier.

Reinforcing Steel:

Minimum clearance to reinforcing steel shall be 1 1/2" except as shown for bars embedded into end bent.

TYPE D BARRIER AT END BENTS

(Left barrier shown, right barrier similar)

Note: This drawing is not to scale. Follow dimensions.

DESIGNED BY:	KLW	7/2020
DETAILED BY:	JTC	7/2020
CHECKED BY:	DMA	7/2020

Sheet No. 21 of 31

STATE OF MISSOURI
KEITH LAWRENCE WETTER
NUMBER E-25019
REGISTERED PROFESSIONAL ENGINEER

THIS SHEET HAS BEEN SIGNED, SEALED AND DATED ELECTRONICALLY

DATE PREPARED	
7/10/2020	
ROUTE	STATE
I-49	MO
DISTRICT	SHEET NO.
BR	21
COUNTY	
VERNON	
JOB NO.	
J7I3363	
CONTRACT ID.	
PROJECT NO.	
BRIDGE NO.	
A8806	

DESCRIPTION	DATE

MISSOURI HIGHWAYS AND TRANSPORTATION COMMISSION
105 WEST CAPITOL
JEFFERSON CITY, MO 65102
1-888-ASK-MODOT (1-888-275-6636)

LOCHNER
16105 W. 113th Street | Suite 107 | Lenexa, KS 66219
Certificate of Authority #F00727076

REV.

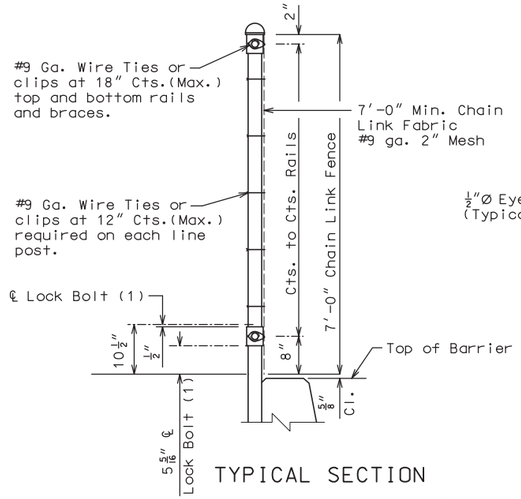

TYPICAL SECTION

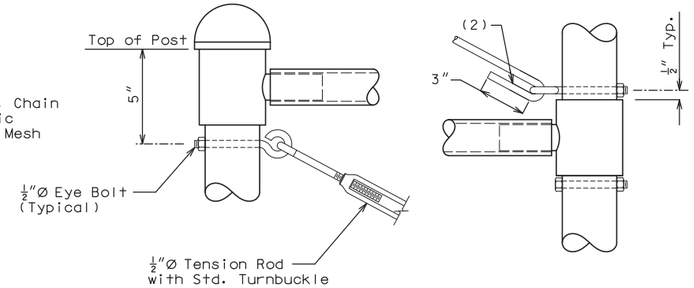

TENSION ROD DETAIL

(1) Note: Lock bolt shall be 5/16" Ø hex head bolt and nut. Bolt holes shall be 3/8" diameter. (Omit @ pull post & end post.)

(2) Field bend hook on this end to fit. Shorten as required to achieve 3" tangent.

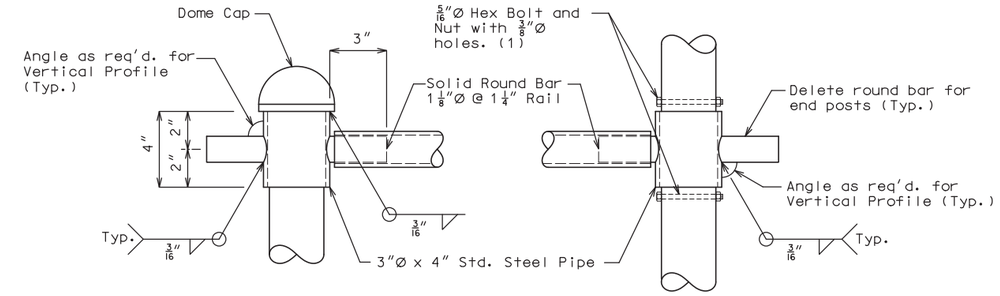

POST - RAIL CONNECTION

TABLE A		
FENCE LOCATIONS		
Offset	Begin Station	End Station
Lt.	1000+82	1002+32
Rt.	1000+42	1001+92

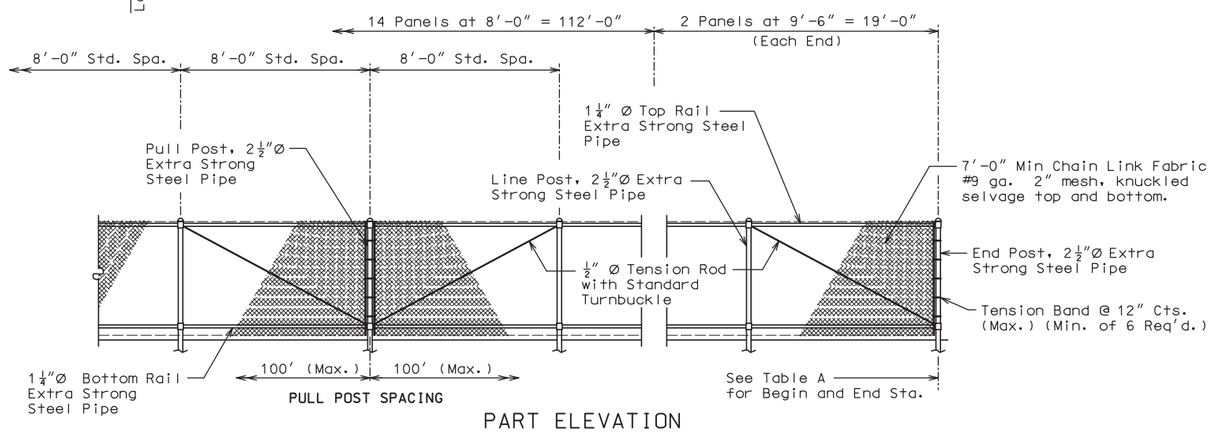

PART ELEVATION

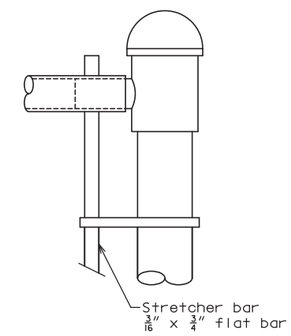

POST
END RAIL CONNECTION

GENERAL NOTES:

Pedestrian Fence (Structures) shall be in accordance with Sec 1043 except all fabric shall have the top and bottom edges knuckled.

All posts shall be vertical.

Payment for furnishing, galvanizing and erecting the fence and frame complete with anchor bolts and washers will be considered completely covered by the contract unit price for Pedestrian Fence (Structures) per linear foot.

Dimensions of pedestrian guard fence are measured horizontally.

The maximum spacing allowed between pull posts and end posts is 100 ft. 1/2" Ø tension rod are required for panels adjacent to pull posts and end posts only.

Connect the lower end of the 1/2" Ø tension rod to the bottom of the pull posts and end posts to which the stretcher bar is attached.

Core wire size for wire fabric shall be 9 gage minimum and zinc coated in accordance with Sec 1043.

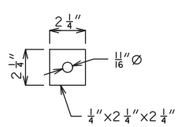

SPECIAL WASHER

(3) Double Nut w/ heavy hex nuts & washers. Thread minimum of 2".

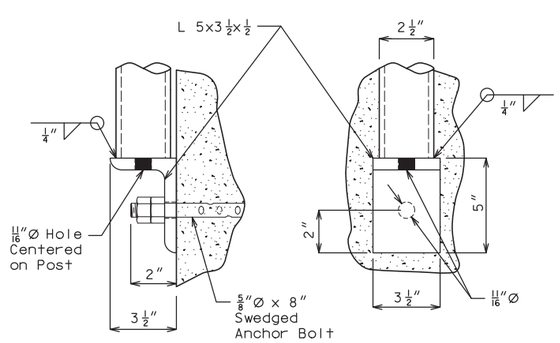

DETAIL "A"

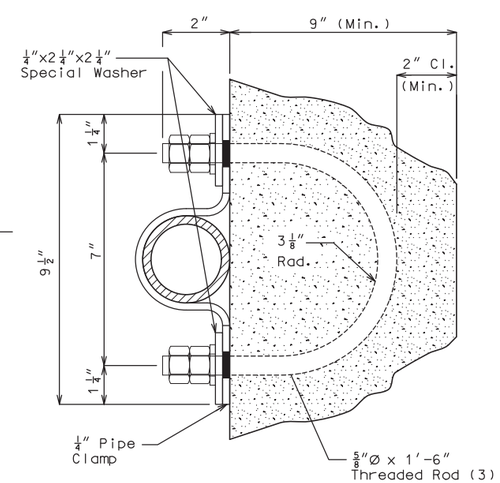

SECTION A-A

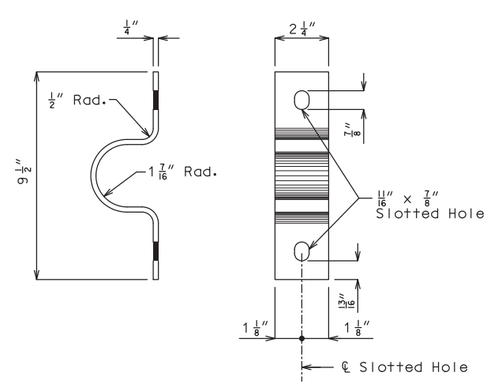

PIPE CLAMP DETAILS

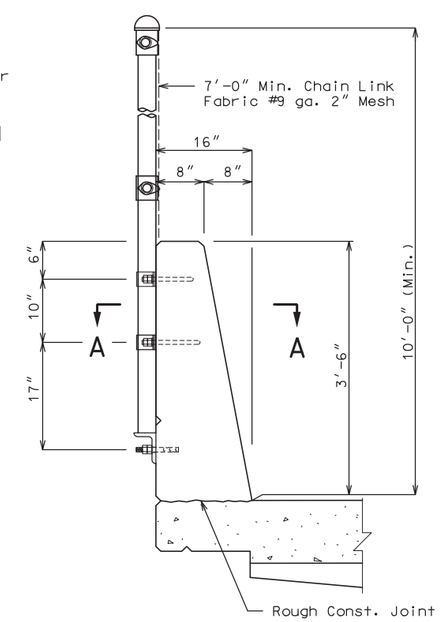

FENCE ATTACHMENT DETAILS

DETAILS OF PEDESTRIAN CHAIN LINK FENCE

Note: This drawing is not to scale. Follow dimensions.

DESIGNED BY:	KLW	5/2020
DETAILED BY:	RCL	5/2020
CHECKED BY:	JCG	5/2020

Sheet No. 22 of 31

STATE OF MISSOURI
KEITH LAWRENCE WETTER
NUMBER E-25019
REGISTERED PROFESSIONAL ENGINEER

THIS SHEET HAS BEEN SIGNED, SEALED AND DATED ELECTRONICALLY

DATE PREPARED 7/10/2020

ROUTE	STATE
I-49	MO
DISTRICT	SHEET NO.
BR	22

COUNTY VERNON

JOB NO. J7I3363

CONTRACT ID.

PROJECT NO.

BRIDGE NO. A8806

DESCRIPTION

DATE

MISSOURI HIGHWAYS AND TRANSPORTATION COMMISSION
105 WEST CAPITOL
JEFFERSON CITY, MO 65102
1-888-ASK-MODOT (1-888-275-6636)

LOCHNER
16105 W. 113th Street | Suite 107 | Lenexa, KS 66219
Certificate of Authority #F00727076

REV.

B_A8806_022_J713363_FENCE.dgn 4:16:05 PM 7/9/2020

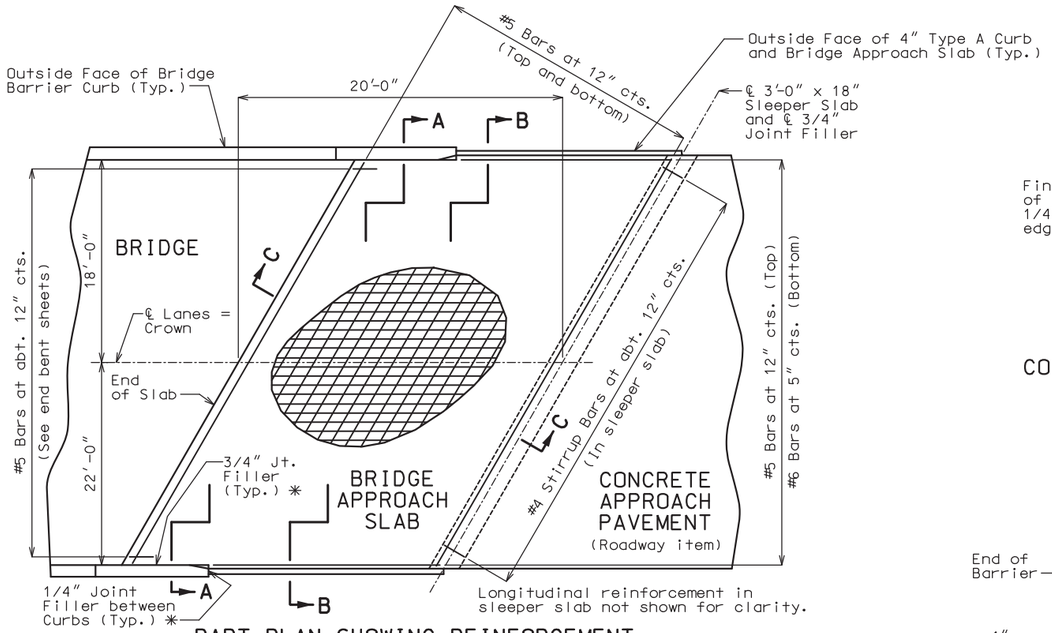

PART PLAN SHOWING REINFORCEMENT

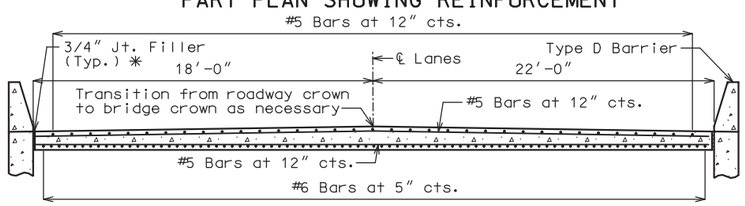

SECTION A-A
(Looking Upstation)

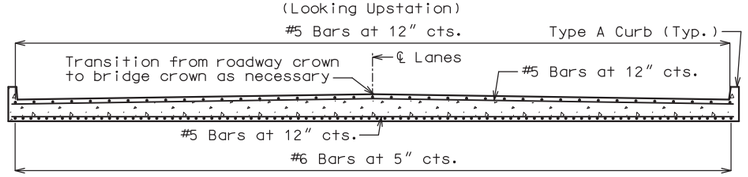

SECTION B-B
(Looking Upstation)

With the approval of the engineer, the contractor may crown the bottom of the approach slab to match the crown of the roadway surface.

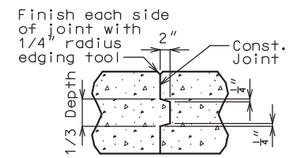

CONST. JOINT DETAIL

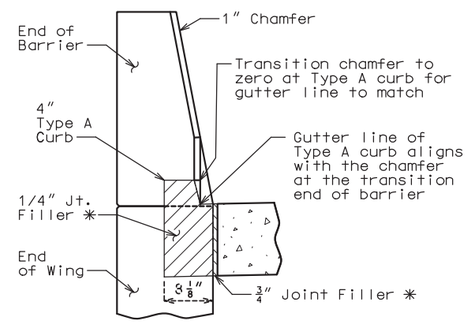

SECTION BETWEEN CURB AND BARRIER

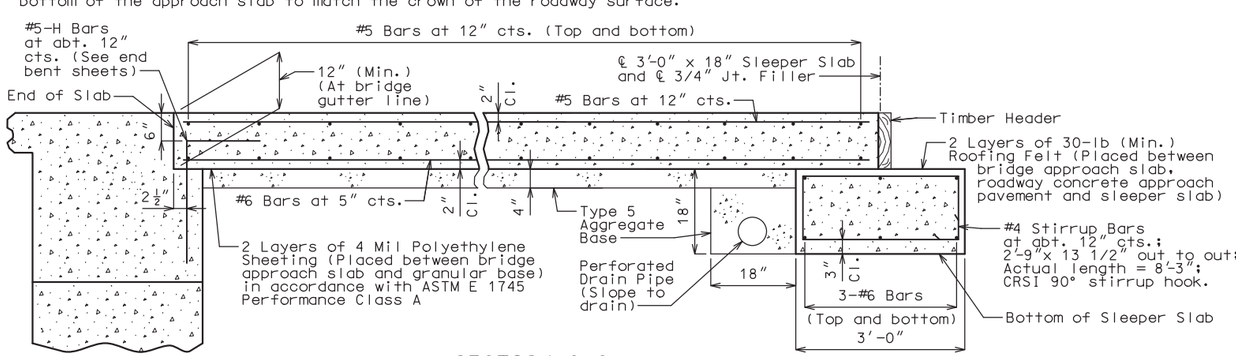

SECTION C-C

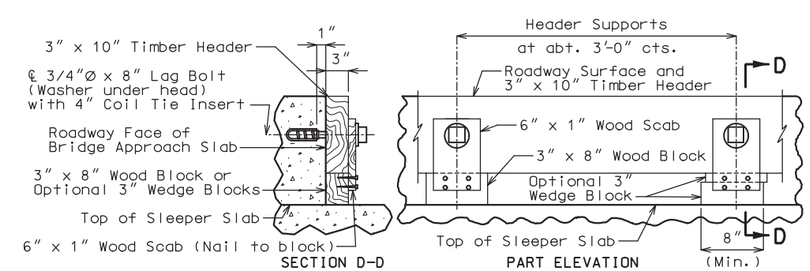

SECTION D-D PART ELEVATION

DETAILS OF TIMBER HEADER

Remove timber header when concrete pavement is placed.

General Notes:

All concrete for the bridge approach slab and sleeper slab shall be in accordance with Sec 503 (f'c = 4,000 psi).

The reinforcing steel in the bridge approach slab and the sleeper slab shall be epoxy coated Grade 60 with fy = 60,000 psi.

Drain pipe may be either 6" diameter corrugated metallic-coated pipe underdrain, 4" diameter corrugated polyvinyl chloride (PVC) drain pipe, or 4" diameter corrugated polyethylene (PE) drain pipe.

Minimum clearance to reinforcing steel shall be 1 1/2", unless otherwise shown.

The reinforcing steel in the bridge approach slab and the sleeper slab shall be continuous. The transverse reinforcing steel may be made continuous by lap splicing the #5 bars 29" or by mechanical bar splice.

All joint filler shall be in accordance with Sec 1057 for preformed fiber expansion joint filler except as noted.

The contractor shall pour and satisfactorily finish the bridge before pouring the bridge approach slab.

Longitudinal construction joints in approach slab and sleeper slab shall be aligned with longitudinal construction joints in bridge slab.

For Concrete Approach Pavement details, see roadway plans.

See Missouri Standard Plans Drawing 609.00 for details of Type A Curb.

Payment for furnishing all materials, labor and excavation necessary to construct the approach slab, including the timber header, sleeper slab, underdrain, Type 5 aggregate base, joint filler and all other appurtenances and incidental work as shown on this sheet, complete in place, will be considered completely covered by the contract unit price for Bridge Approach Slab (Major Road) per square yard.

✱ Seal joint between vertical face of approach slab and wing with "Silicone Joint Sealant for Saw Cut and Formed Joints" in accordance with Sec 717.

STATE OF MISSOURI
KEITH LAWRENCE WETTER
NUMBER E-25019
REGISTERED PROFESSIONAL ENGINEER

THIS SHEET HAS BEEN SIGNED, SEALED AND DATED ELECTRONICALLY

DATE PREPARED	
7/10/2020	
ROUTE	STATE
I-49	MO
DISTRICT	SHEET NO.
BR	23
COUNTY	
VERNON	
JOB NO.	
J7I3363	
CONTRACT ID.	
PROJECT NO.	
BRIDGE NO.	
A8806	

DESCRIPTION

DATE

MISSOURI HIGHWAYS AND TRANSPORTATION COMMISSION
105 WEST CAPITOL
JEFFERSON CITY, MO 65102
1-888-ASK-MODOT (1-888-275-6636)

LOCHNER
16105 W. 113th Street | Suite 107 | Lenexa, KS 66219
Certificate of Authority #F00727076

DESIGNED BY:	KLW	5/2020
DETAILED BY:	JTC	5/2020
CHECKED BY:	JSS	5/2020

DETAILS OF BRIDGE APPROACH SLAB (MAJOR ROAD)

Note: This drawing is not to scale. Follow dimensions.

REV.

BILL OF REINFORCING STEEL

NO. REQ'D.	MARK NO. SIZE	MARK NO. MARK	LOCATION	EPOXY (E)	SHAPE NO.	STIRRUP (S)	SUBSTR. (X)	VARIES (V)	NO. EACH	B FT. IN.	C FT. IN.	D FT. IN.	E FT. IN.	F FT. IN.	H FT. IN.	K FT. IN.	NOMINAL LENGTH FT. IN.	ACTUAL LENGTH FT. IN.	WEIGHT LBS.
SUBSTRUCTURE																			
INTERMEDIATE BENTS																			
14	11	H21	Cap		18		X			56 7.000							59 9	59 9	4444
14	11	H22	Cap		20		X			56 7.000							56 7	56 7	4209
12	7	H23	Cap		20		X			56 7.000							56 7	56 7	1388
24	7	H24	Cap		20		X	V	4	28 0.000							28 0	28 0	2052
			5 Equal Increments				X			55 8.000							55 8	55 8	
20	7	H25	Cap		14		X				13 1.000	17 11.000			6 1.375	16 10.125	31 0	31 0	1267
14	8	H26	Bott of Wall		20		X			21 9.000							21 9	21 9	813
100	4	P21	Shaft/Socket		16		X			4 0.000	2 9.000						15 4	15 2	1013
60	4	U21	Cap		10	S	X				12.000	4 3.000					6 3	6 1	244
58	5	U22	Cap		10	S	X				10 5.000	4 3.000					25 1	24 10	1502
144	5	U23	Cap		13	S	X	V	8	3 0.000	4 3.000	3 0.000	4 3.000				15 5	15 1	3192
			17 Equal Increments				X			3 0.000	10 5.000	3 0.000	10 5.000				27 9	27 5	
16	7	U24	Cap		10	S	X				14.000	4 1.000					6 5	6 1	199
88	6	U25	Wall		10	S	X				12 8.000	4 3.000					29 7	29 3	3866
264	4	U26	Wall		31	S	X			4 2.500	4.500						5 0	4 11	867
164	8	V21	Wall		20		X			27 10.000							27 10	27 10	12188
64	11	V22	Shaft/Socket		20		X			29 3.000							29 3	29 3	9946
56	6	V23	Cap Dowel		20		X			2 6.000							2 6	2 6	210
SUPERSTRUCTURE																			
END BENTS																			
22	6	F1	Fillet	E	23					2 3.000	2 10.000	2 3.000	2 1.000	10.375	2 1.000	10.375	7 4	7 2	237
22	6	F2	Fillet	E	23					2 3.000	6 10.000	2 3.000	10.375	2 1.000	10.375	2 1.000	11 4	11 4	374
16	10	H1	Beam	E	20					60 0.000							60 0	60 0	4131
24	6	H2	Beam/Diaph.	E	20					60 0.000							60 0	60 0	2163
8	6	H3	Diaphragm	E	20					7 10.000							7 10	7 10	94
24	6	H4	Diaphragm	E	20					11 8.000							11 8	11 8	421
4	6	H6	Diaphragm	E	20					2 1.000							2 1	2 1	13
12	6	H7	Diaphragm	E	20					4 0.000							4 0	4 0	72
114	5	H9	Diaphragm	E	19	S				2 0.000	18.000						3 6	3 5	406
88	6	H10	Wing	E	20					15 2.000							15 2	15 2	2005
32	8	H11	Wing	E	20					16 0.000							16 0	16 0	1367
8	6	H12	Diaphragm	E	21					5 0.000	6 7.000				3 6.375	3 6.375	11 7	10 10	130
8	6	H13	Diaphragm	E	14						6 7.000	5 0.000			3 6.375	3 6.375	11 7	11 7	139
10	5	H14	Strand Tie Bar	E	23					18.000	3 2.000	18.000	12.750	12.750	12.750	12.750	6 2	6 1	63
10	6	H15	Diaphragm	E	20					5 6.000							5 6	5 6	83
112	5	U1	Beam	E	10	S					6 8.000	4 5.000					17 9	17 6	2044
78	5	U2	Beam	E	13	S				5 3.000	3 2.000	5 3.000	3 2.000				17 9	17 5	1417
28	5	U3	Beam	E	10	S					3 2.000	5 3.000					11 7	11 4	331
76	5	U4	Diaphragm	E	10	S					3 11.000	4 7.000					12 5	12 2	964
76	6	U5	Diaphragm	E	19	S				2 11.000	5 0.000						7 11	7 9	885
152	6	U6	Diaphragm	E	6	S				7 0.000	3 8.000						10 8	10 6	2397
40	5	V1	Beam	E	20					6 8.000							6 8	6 8	278
70	6	V2	Diaphragm	E	20					2 11.000							2 11	2 11	307
78	6	V3	Wing	E	20					7 7.000							7 7	7 7	888
26	6	V4	Wing	E	20					7 11.000							7 11	7 11	309

BILL OF REINFORCING STEEL

NO. REQ'D.	MARK NO. SIZE	MARK NO. MARK	LOCATION	EPOXY (E)	SHAPE NO.	STIRRUP (S)	SUBSTR. (X)	VARIES (V)	NO. EACH	B FT. IN.	C FT. IN.	D FT. IN.	E FT. IN.	F FT. IN.	H FT. IN.	K FT. IN.	NOMINAL LENGTH FT. IN.	ACTUAL LENGTH FT. IN.	WEIGHT LBS.
INT. BENT DIAPHRAGM																			
16	6	H40	Diaphragm	E	20					7 9.000							7 9	7 9	186
16	6	H41	Diaphragm	E	20					11 7.000							11 7	11 7	278
48	4	H42	Diaphragm	E	20					11 7.000							11 7	11 7	371
12	6	H43	Diaphragm	E	20					5 6.000							5 6	5 6	99
16	5	H44	Diaphragm	E	14						3 3.000	15.000			10.625	10.625	4 6	4 6	75
24	5	H45	Diaphragm	E	23					15.000	3 3.000	15.000	10.625	10.625	10.625	10.625	5 9	5 8	142
80	4	U40	Diaphragm	E	28	S					3 8.000	4 2.000	18.000				9 4	9 2	490
32	6	U41	Diaphragm	E	28	S					4 8.000	4 2.000	2 2.000				11 0	10 8	513
32	6	U42	Diaphragm	E	28	S					4 8.000	3 4.000	2 2.000				10 2	9 10	473
16	6	U43	Diaphragm	E	28	S					17.000	3 4.000	2 2.000				6 11	6 7	158
8	5	U44	Diaphragm	E	6	S				4 5.000	13.000						5 6	5 5	45
32	5	U45	Diaphragm	E	6	S				4 5.000	13.000	17.000					6 11	6 8	223
16	5	V40	Diaphragm	E	20					4 2.000							4 2	4 2	70
SLAB																			
439	6	S1	Top Mat Trans.	E	20					42 5.000							42 5	42 5	27969
351	5	S2	Bot. Mat Trans.	E	20					42 5.000							42 5	42 5	15528
158	6	S3	Top Mat Trans. Ser.	E	20			V	2	2 11.000							2 11	2 11	5320
			Increment = 6 inch							41 11.000							41 11	41 11	
126	5	S4	Bot. Mat Trans. Ser.	E	20			V	2	3 0.500							3 1	3 1	2951
			Increment = 7.5 inch							41 9.500							41 10	41 10	
72	5	S5	Top Long.	E	20					60 0.000							60 0	60 0	4506
108	5	S6	Bottom Long.	E	20					55 0.000							55 0	55 0	6195
72	7	S7	Top Long.	E	20					37 6.000							37 6	37 6	5519
108	5	S8	Bottom Long.	E	20					60 0.000							60 0	60 0	6759
72	5	S9	Top Long.	E	20					42 0.000							42 0	42 0	3154
54	5	S10	Top Long.	E	20					45 0.000							45 0	45 0	2534
132	7	S11	Top Long.	E	20					23 6.000							23 6	23 6	6340

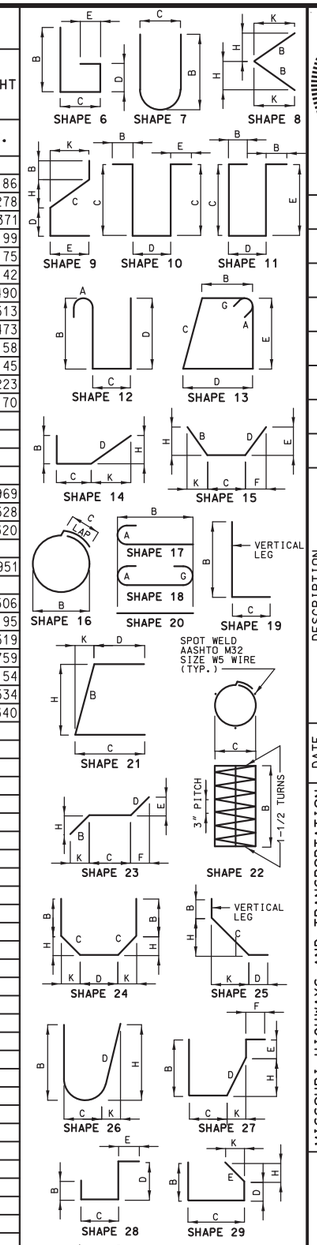

BENDING DIAGRAMS

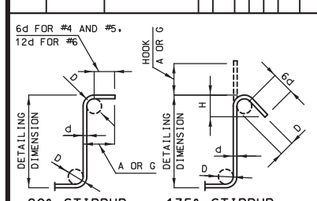

STIRRUP HOOK DIMENSIONS				
GRADES 40 - 50 - 60 KSI				
BAR SIZE	D (IN.)	90° HOOK	135° HOOK	
		HOOK A OR G	HOOK A OR G	APPROX. H
#4	2"	4 1/2"	4 1/2"	3"
#5	2 1/2"	6"	5 1/2"	3 3/4"
#6	4 1/2"	12"	8"	4 1/2"

NOTE: UNLESS OTHERWISE NOTED, DIAMETER "D" IS THE SAME FOR ALL BENDS AND HOOKS ON A BAR.

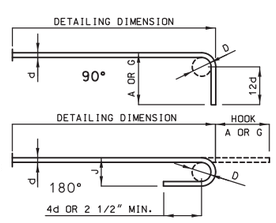

END HOOK DIMENSIONS				
BAR SIZE	D (IN.)	ALL GRADES		
		180° HOOKS		90° HOOKS
		A OR G	J	A OR G
#3	2 1/4"	5"	3"	6"
#4	3"	6"	4"	8"
#5	3 3/4"	7"	5"	10"
#6	4 1/2"	8"	6"	12"
#7	5 1/4"	10"	7"	14"
#8	6"	11"	8"	16"
#9	9 1/2"	15"	11 3/4"	19"
#10	10 3/4"	17"	13 1/4"	22"
#11	12"	19"	14 3/4"	2'-0"
#14	18 1/4"	2'-3"	21 3/4"	2'-7"

NOTE:
ALL STANDARD HOOKS AND BENDS OTHER THAN 180 DEGREE ARE TO BE BENT WITH SAME PROCEDURE AS FOR 90 DEGREE STANDARD HOOKS.
HOOKS AND BENDS SHALL BE IN ACCORDANCE WITH THE PROCEDURES AS SHOWN ON THIS SHEET.
E = EPOXY COATED REINFORCEMENT.
S = STIRRUP.
X = BAR IS INCLUDED IN SUBSTRUCTURE QUANTITIES.
V = BAR DIMENSIONS VARY IN EQUAL INCREMENTS BETWEEN DIMENSIONS SHOWN ON THIS LINE AND THE FOLLOWING LINE.
NO. EA. = NUMBER OF BARS OF EACH LENGTH.
NOMINAL LENGTHS ARE BASED ON OUT TO OUT DIMENSIONS SHOWN IN BENDING DIAGRAMS AND ARE LISTED FOR FABRICATORS USE. (NEAREST INCH)
ACTUAL LENGTHS ARE MEASURED ALONG CENTERLINE BAR TO THE NEAREST INCH.
PAYWEIGHTS ARE BASED ON ACTUAL LENGTHS.
FOUR ANGLE OR CHANNEL SPACERS ARE REQUIRED FOR EACH COLUMN SPIRAL. SPACERS ARE TO BE PLACED ON INSIDE OF SPIRALS. LENGTH AND WEIGHT OF COLUMN SPIRALS DO NOT INCLUDE SPLICES OR SPACERS.
REINFORCING STEEL (GRADE 60) FY = 60,000 PSI.

DESIGNED BY:	JTC	5/2020
DETAILED BY:	JTC	5/2020
CHECKED BY:	KLW	5/2020

Note: This drawing is not to scale. Follow dimensions.

Sheet No. 24 of 31

STATE OF MISSOURI
KEITH LAWRENCE WETTER
NUMBER E-25019
REGISTERED PROFESSIONAL ENGINEER

THIS SHEET HAS BEEN SIGNED, SEALED AND DATED ELECTRONICALLY

DATE PREPARED 7/10/2020

ROUTE	STATE
I-49	MO
DISTRICT	SHEET NO.
BR	24

COUNTY: VERNON
JOB NO.: J7I3363
CONTRACT ID.:
PROJECT NO.:
BRIDGE NO.: A8806

DESCRIPTION	DATE

MISSOURI HIGHWAYS AND TRANSPORTATION COMMISSION
105 WEST CAPITOL
JEFFERSON CITY, MO 65102
1-888-ASK-MODOT (1-888-275-6636)

LOCHNER
16105 W. 113th Street | Suite 107 | Lenexa, KS 66219
Certificate of Authority #F0727076

REV.

B_A8806_024_J7I3363_BOR_01.dgn 4:16:43 PM 7/9/2020

BILL OF REINFORCING STEEL

NO. REQ'D.	MARK NO. SIZE	MARK NO. MARK	LOCATION	EPOXY (E)	SHAPE NO.	STIRRUP (S)	SUBSTR. (X)	VARIES (V)	NO. EACH	B FT. IN.	C FT. IN.	D FT. IN.	E FT. IN.	F FT. IN.	H FT. IN.	K FT. IN.	NOMINAL LENGTH FT. IN.	ACTUAL LENGTH FT. IN.	WEIGHT LBS.
Type D Barrier																			
520	5	R1	Barrier	E	26					3 3.000	5.125	3 3.625			3 3.000	7.000	6 10	6 9	3661
520	5	R2	Barrier	E	19	S				20.250	9.625						2 6	2 5	1311
520	5	R3	Barrier	E	27	S					9.625	12.000	5.250	9.625	11.625	2.875	3 1	2 10	1537
40	5	R4	Barrier	E	20					33 6.000							33 6	33 6	1398
80	5	R5	Barrier	E	20					9 8.000							9 8	9 8	807
40	5	R6	Barrier	E	20					43 0.000							43 0	43 0	1794
40	5	R7	Barrier	E	20					34 4.000							34 4	34 4	1432
20	5	K1	Barrier	E	27					3 8.000	9.250	5.250	3 2.875		5.125	1.000	8 1	7 11	165
80	5	K2	Barrier	E	27					3 8.000	9.250	14.500	2 5.750		14.250	2.750	8 2	7 11	661
8	5	K3	Barrier	E	27					22.125	9.250	14.375	8.000	12.000	14.125	2.750	5 6	5 1	42
20	5	K4	Barrier	E	19			V	4	2 4.250	10.000						3 2	3 1	66
			4 Equal Increments							2 6.250	10.000						3 4	3 3	
20	5	K5	Barrier	E	14			V	4	8.375	9.625	18.500			4.000	18.000	3 1	2 11	63
			4 Equal Increments							8.375	9.625	20.500			4.500	20.000	3 3	3 1	
12	5	K6	Barrier	E	19			V	4	2 6.750	10.000						3 5	3 3	41
			2 Equal Increments							2 7.750	10.000						3 6	3 4	
12	5	K7	Barrier	E	21			V	4	2 6.750	10.000				2 6.125	6.250	3 5	3 3	41
			2 Equal Increments							2 7.750	10.000				2 7.125	6.500	3 6	3 4	
36	5	K8	Barrier	E	19			V	4	2 8.500	10.000						3 7	3 5	138
			8 Equal Increments							3 2.500	10.000						4 1	3 11	
36	5	K9	Barrier	E	21			V	4	2 8.625	10.000				2 7.875	6.750	3 7	3 4	135
			8 Equal Increments							3 2.625	10.000				3 1.875	7.750	4 1	3 11	
40	5	K10	Barrier	E	19					3 3.000	10.000						4 1	3 11	163
40	5	K11	Barrier	E	21					3 3.125	10.000				3 2.375	7.875	4 1	3 11	163
24	5	K12	Barrier	E	20					18 0.000							18 0	18 0	451
12	5	K13	Barrier	E	20			V	4	11 3.000							11 3	11 3	178
			2 Equal Increments							17 3.000							17 3	17 3	
24	5	K14	Barrier	E	20					16 8.000							16 8	16 8	417
12	5	K15	Barrier	E	20			V	4	9 11.000							9 11	9 11	162
			2 Equal Increments							15 11.000							15 11	15 11	
Slip-Form Option																			
40	5	C1	Barrier	E	20					10 3.000							10 3	10 3	428
8	5	C2	Barrier	E	20					12 0.000							12 0	12 0	100

BILL OF REINFORCING STEEL

NO. REQ'D.	MARK NO. SIZE	MARK NO. MARK	LOCATION	EPOXY (E)	SHAPE NO.	STIRRUP (S)	SUBSTR. (X)	VARIES (V)	NO. EACH	B FT. IN.	C FT. IN.	D FT. IN.	E FT. IN.	F FT. IN.	H FT. IN.	K FT. IN.	NOMINAL LENGTH FT. IN.	ACTUAL LENGTH FT. IN.	WEIGHT LBS.
TOTALS																			
	4																		2124
	4			E															861
	5																		4694
	5			E															63039
	6																		4076
	6			E															45513
	7																		4906
	7			E															11859
	8																		13001
	8			E															1367
	10			E															4131
	11																		18599
			TOTAL																47400
			TOTAL	E															126718
SLAB ON CONC. NU GIRDER																			
	4			E															861
	5			E															47685
	6			E															45513
	7			E															11859
	8			E															1367
	10			E															4131
			TOTAL	E															111416
REINFORCING STEEL (BRIDGES)																			
	4																		2124
	5																		4694
	6																		4076
	7																		4906
	8																		13001
	11																		18599
			TOTAL																47400
BARRIER																			
	5			E															14826
			TOTAL	E															14826
SLIPFORM OPTION																			
	5			E															528
			TOTAL	E															528

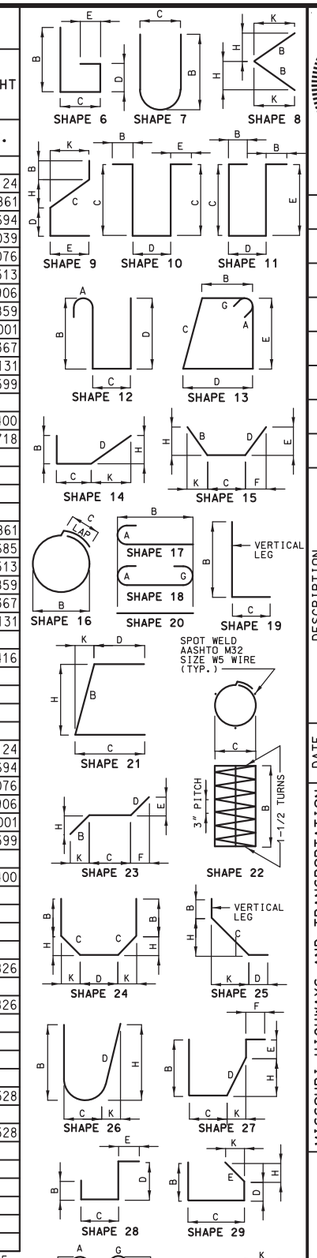

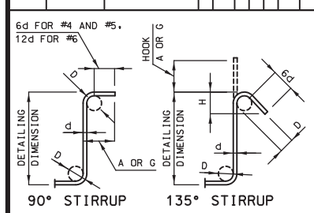

STIRRUP HOOK DIMENSIONS			
GRADES 40 - 50 - 60 KSI			
BAR SIZE	D (IN.)	90° HOOK	135° HOOK
		HOOK A OR G	HOOK A OR G	APPROX. H
#4	2"	4 1/2"	4 1/2"	3"
#5	2 1/2"	6"	5 1/2"	3 3/4"
#6	4 1/2"	12"	8"	4 1/2"

NOTE: UNLESS OTHERWISE NOTED, DIAMETER "D" IS THE SAME FOR ALL BENDS AND HOOKS ON A BAR.

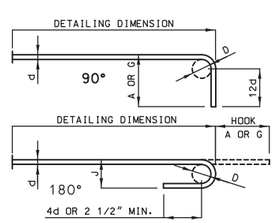

END HOOK DIMENSIONS				
BAR SIZE	D (IN.)	ALL GRADES		
		180° HOOKS		90° HOOKS
		A OR G	J	A OR G
#3	2 1/4"	5"	3"	6"
#4	3"	6"	4"	8"
#5	3 3/4"	7"	5"	10"
#6	4 1/2"	8"	6"	12"
#7	5 1/4"	10"	7"	14"
#8	6"	11"	8"	16"
#9	9 1/2"	15"	11 3/4"	19"
#10	10 3/4"	17"	13 1/4"	22"
#11	12"	19"	14 3/4"	2'-0"
#14	18 1/4"	2'-3"	21 3/4"	2'-7"

NOTE:
ALL STANDARD HOOKS AND BENDS OTHER THAN 180 DEGREE ARE TO BE BENT WITH SAME PROCEDURE AS FOR 90 DEGREE STANDARD HOOKS.
HOOKS AND BENDS SHALL BE IN ACCORDANCE WITH THE PROCEDURES AS SHOWN ON THIS SHEET.
E = EPOXY COATED REINFORCEMENT.
S = STIRRUP.
X = BAR IS INCLUDED IN SUBSTRUCTURE QUANTITIES.
V = BAR DIMENSIONS VARY IN EQUAL INCREMENTS BETWEEN DIMENSIONS SHOWN ON THIS LINE AND THE FOLLOWING LINE.
NO. EA. = NUMBER OF BARS OF EACH LENGTH.
NOMINAL LENGTHS ARE BASED ON OUT TO OUT DIMENSIONS SHOWN IN BENDING DIAGRAMS AND ARE LISTED FOR FABRICATORS USE. (NEAREST INCH)
ACTUAL LENGTHS ARE MEASURED ALONG CENTERLINE BAR TO THE NEAREST INCH.
PAYWEIGHTS ARE BASED ON ACTUAL LENGTHS.
FOUR ANGLE OR CHANNEL SPACERS ARE REQUIRED FOR EACH COLUMN SPIRAL. SPACERS ARE TO BE PLACED ON INSIDE OF SPIRALS. LENGTH AND WEIGHT OF COLUMN SPIRALS DO NOT INCLUDE SPLICES OR SPACERS.
REINFORCING STEEL (GRADE 60) FY = 60,000 PSI.

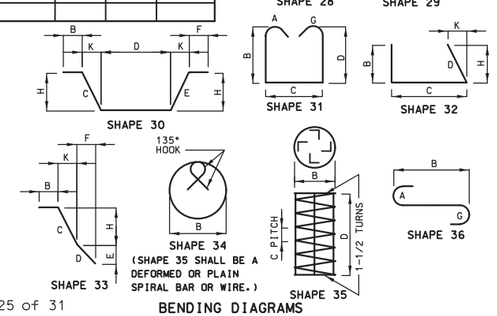

BENDING DIAGRAMS

DESIGNED BY:	JTC	5/2020
DETAILED BY:	JTC	5/2020
CHECKED BY:	KLW	5/2020

Note: This drawing is not to scale. Follow dimensions.

Sheet No. 25 of 31

STATE OF MISSOURI
KEITH LAWRENCE WETTER
NUMBER E-25019
REGISTERED PROFESSIONAL ENGINEER

THIS SHEET HAS BEEN SIGNED, SEALED AND DATED ELECTRONICALLY

DATE PREPARED 7/10/2020

ROUTE	STATE
I-49	MO
DISTRICT	SHEET NO.
BR	25

COUNTY: VERNON
JOB NO.: J7I3363
CONTRACT ID.
PROJECT NO.
BRIDGE NO.: A8806

DESCRIPTION | DATE

MISSOURI HIGHWAYS AND TRANSPORTATION COMMISSION
105 WEST CAPITOL
JEFFERSON CITY, MO 65102
1-888-ASK-MODOT (1-888-275-6636)

LOCHNER
16105 W. 113th Street | Suite 107 | Lenexa, KS 66219
Certificate of Authority #F00727076

REV.

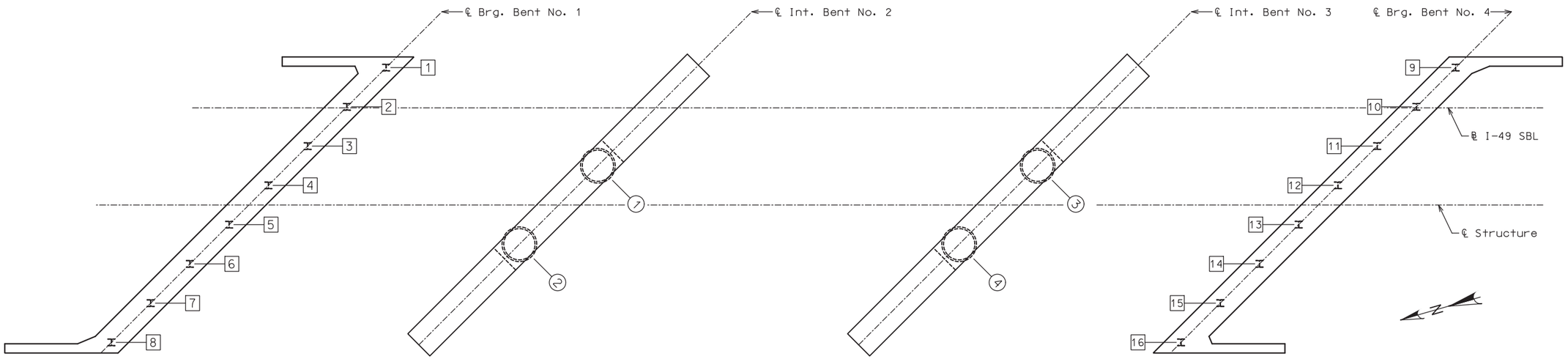

PART PLAN SHOWING PILE AND DRILLED SHAFT NUMBERING
FOR RECORDING AS-BUILT PILE AND DRILLED SHAFT DATA

LEGEND

1 - Pile No.

4 - Drilled Shaft No.

As-Built Pile Data			
Pile No.	Length in Place (ft)	Computed Nominal Axial Compressive Resistance (kips)	Remarks
End Bent No. 1			
1			
2			
3			
4			
5			
6			
7			
8			

As-Built Drilled Shaft Data				
Shaft No.	Top of Sound Rock (Elev.)	Tip of Casing (Elev.)	Bottom of Rock Socket (Elev.)	Remarks
Int. Bent No. 2				
1				
2				
Int. Bent No. 3				
3				
4				

As-Built Pile Data			
Pile No.	Length in Place (ft)	Computed Nominal Axial Compressive Resistance (kips)	Remarks
End Bent No. 4			
9			
10			
11			
12			
13			
14			
15			
16			

Note:
Indicate in remarks column:
A. Pile type and grade
B. Batter
C. Driven to practical refusal

This sheet to be completed by MoDOT construction personnel.

AS-BUILT PILE AND DRILLED SHAFT DATA

Note: This drawing is not to scale. Follow dimensions.

DESIGNED BY:	KLW	5/2020
DETAILED BY:	JTC	5/2020
CHECKED BY:	JCG	5/2020

STATE OF MISSOURI
KEITH LAWRENCE WETTER
NUMBER E-25019
REGISTERED PROFESSIONAL ENGINEER

THIS SHEET HAS BEEN SIGNED, SEALED AND DATED ELECTRONICALLY

DATE PREPARED 7/10/2020

ROUTE	STATE
I-49	MO
DISTRICT	SHEET NO.
BR	26

COUNTY: VERNON

JOB NO.: J7I3363

CONTRACT ID.:

PROJECT NO.:

BRIDGE NO.: A8806

DESCRIPTION	DATE

MISSOURI HIGHWAYS AND TRANSPORTATION COMMISSION
105 WEST CAPITOL
JEFFERSON CITY, MO 65102
1-888-ASK-MODOT (1-888-275-6636)

LOCHNER
16105 W. 113th Street | Suite 107 | Lenexa, KS 66219
Certificate of Authority #F00727076

REV.

Missouri Department of Transportation
Construction and Materials

BORING NO. V-19-03 (101)
Page 1 of 2

Job No.: J7I3363-A8806 **County:** Vernon **Route:** I-49 SB
Design: A8806 **Skew:** 45 Deg. (LA) **Location:** Nevada
Bent: 1 **Logged By:** Matthew Kraus **Operator:** Kenny Mathews
Station: 1000+75.0 **Northing:** 597428.2 **Date of Work:** 01/09/19-01/09/19
Offset: 32.0 R **Easting:** 2842817.8 **Depth to Water:** 10.0
Elevation: 924.7 **Requested Northing:** **Depth Hole Open:** 30
Requested Station: **Requested Easting:** **Time Change:** 1 hour
Requested Offset: **Equipment:** Acker Renegade ,Split-Spoon Sampler, NQ
Requested Elevation: **Location Note:** Over MNA Railroad
Drill No.: G-9667 **Hammer Efficiency:** 76% **Drilling Method:** Hollow Stem Auger

Depth (ft)	Description	Elevation (ft)	Sample Type	REC % (RQD %)	Blow Counts (N_{60})	Shear Data	Field Tests	Index Tests
0	0.0-6.2' Brown, LEAN CLAY, medium stiff, moist							
5		920						
	6.2-35.2' Gray, LEAN CLAY, medium stiff to very stiff, moist			13	2-2-4 (8)		PP = 1.00 tsf	
10		915		93	1-4-6 (13)		PP = 2.00 tsf	MC = 14.9% γ_{sat} = 137 pcf(1)
15		910		93	1-5-6 (14)		PP = 2.00 tsf	MC = 27.4% γ_{sat} = 123 pcf(1)
20		905		93	1-4-6 (13)		PP = 2.00 tsf	MC = 31.2% γ_{sat} = 119 pcf(1)
25		900		93	1-5-7 (15)		PP = 2.50 tsf	MC = 33.5% γ_{sat} = 117 pcf(1)
30		895		93	3-5-11 (20)		PP = 2.75 tsf	MC = 32.7% γ_{sat} = 118 pcf(1)
35	35.2-37.9' Tan, CLAYEY SAND, medium dense, moist, fine grained, poorly graded	890		73	6-8-7 (19)			
40		885						

N_{60} = (Em/60)Nm N_{60} - Corrected N value for standard 60% SPT efficiency; Em - Measured hammer efficiency in percent; Nm - Observed N-value
(1) = Assumed, (2) = Actual

Coordinate System: U.S. State Plane 1983 **Coordinate Zone:** Missouri West **Coordinate Proj. Factor:** 1.0001017103
Coordinate Datum: NAD 83 (CONUS) **Coordinate Units:** U.S. Survey Feet

* Persons using this information are cautioned that the materials shown are determined by the equipment noted and accuracy of the "log of materials" is limited thereby and by judgement of the operator. THIS INFORMATION IS FOR DESIGN PURPOSES ONLY.

LETTER BOREHOLE - MODOT 20150728.GDT - 2/5/19 15:25 - Z:\SG\GINT\PROJECT FILES\J7I3363-A8806.GPJ

Missouri Department of Transportation
Construction and Materials

BORING NO. V-19-03 (101)
Page 2 of 2

Job No.: J7I3363-A8806 **County:** Vernon **Route:** I-49 SB
Design: A8806 **Skew:** 45 Deg. (LA) **Location:** Nevada
Bent: 1 **Logged By:** Matthew Kraus **Operator:** Kenny Mathews
Station: 1000+75.0 **Northing:** 597428.2 **Date of Work:** 01/09/19-01/09/19
Offset: 32.0 R **Easting:** 2842817.8 **Depth to Water:** 10.0
Elevation: 924.7 **Requested Northing:** **Depth Hole Open:** 30
Requested Station: **Requested Easting:** **Time Change:** 1 hour
Requested Offset: **Equipment:** Acker Renegade ,Split-Spoon Sampler, NQ
Requested Elevation: **Location Note:** Over MNA Railroad
Drill No.: G-9667 **Hammer Efficiency:** 76% **Drilling Method:** Hollow Stem Auger

Depth (ft)	Description	Elevation (ft)	Sample Type	REC % (RQD %)	Blow Counts (N_{60})	Shear Data	Field Tests	Index Tests
40	37.9-61.6' Sancstone, reddish tan, thin bedded, soft, slightly weathered, medium to coarse grained, Argillaceous *(continued)*			67	43/0.3'			
				84 (0)				
45		880						
				98 (38)		Qu Test Results UCS = 210 ksf MC = 0% γ_{moist} = 138.7 pcf		
50		875				Qu Test Results UCS = 372 ksf MC = 0% γ_{moist} = 141.6 pcf		
				100 (76)		Qu Test Results UCS = 285 ksf MC = 0% γ_{moist} = 140.5 pcf		
55		870						
				100 (70)		Qu Test Results UCS = 214 ksf MC = 0% γ_{moist} = 140.9 pcf		
60		865						
	61.6-70.3' Sancstone, gray, thin bedded, soft, slightly weathered, medium to coarse grained, Argillaceous			100 (82)		Qu Test Results UCS = 367 ksf MC = 0% γ_{moist} = 140.2 pcf		
65		860				Qu Test Results UCS = 570 ksf MC = 0% γ_{moist} = 156 pcf		
				100 (50)		Qu Test Results UCS = 329 ksf MC = 0% γ_{moist} = 139.5 pcf		
70	Bottom of borehole at 70.3 feet.	855						

N_{60} = (Em/60)Nm N_{60} - Corrected N value for standard 60% SPT efficiency; Em - Measured hammer efficiency in percent; Nm - Observed N-value
(1) = Assumed, (2) = Actual

Coordinate System: U.S. State Plane 1983 **Coordinate Zone:** Missouri West **Coordinate Proj. Factor:** 1.0001017103
Coordinate Datum: NAD 83 (CONUS) **Coordinate Units:** U.S. Survey Feet

* Persons using this information are cautioned that the materials shown are determined by the equipment noted and accuracy of the "log of materials" is limited thereby and by judgement of the operator. THIS INFORMATION IS FOR DESIGN PURPOSES ONLY.

LETTER BOREHOLE - MODOT 20150728.GDT - 2/5/19 15:25 - Z:\SG\GINT\PROJECT FILES\J7I3363-A8806.GPJ

STATE OF MISSOURI
KEITH LAWRENCE WETTER
NUMBER E-25019
REGISTERED PROFESSIONAL ENGINEER

THIS SHEET HAS BEEN SIGNED, SEALED AND DATED ELECTRONICALLY

DATE PREPARED 7/10/2020
ROUTE I-49 | STATE MO
DISTRICT BR | SHEET NO. 27
COUNTY VERNON
JOB NO. J7I3363
CONTRACT ID.
PROJECT NO.
BRIDGE NO. A8806

DESCRIPTION | DATE

MISSOURI HIGHWAYS AND TRANSPORTATION COMMISSION
105 WEST CAPITOL
JEFFERSON CITY, MO 65102
1-888-ASK-MODOT (1-888-275-6636)

LOCHNER
1616 W. 13th Street | Suite 107 | Lenexa, KS 66219
Certificate of Authority #F00727076

BORING DATA

Note: For locations of borings, see Sheet No. 1.
Data provided by MoDOT Materials Geotechnical Section in Report dated February 5, 2019.

DESIGNED BY:	KLW	5/2020
DETAILED BY:	JTC	5/2020
CHECKED BY:	JCG	5/2020

Note: This drawing is not to scale. Follow dimensions.

REV.

Missouri Department of Transportation
Construction and Materials

BORING NO. V-19-02 (102)
Page 1 of 2

Job No.: J7I3363-A8806
County: Vernon
Route: I-49 SB
Design: A8806
Skew: 45 Deg. (LA)
Location: Nevada
Bent: 1
Logged By: Matthew Kraus
Operator: Kenny Mathews
Station: 1000+75.0
Northing: 597479.3
Date of Work: 01/08/19-01/08/19
Offset: 90.0 R
Easting: 2842790.2
Depth to Water: 10.0
Elevation: 923.4
Requested Northing:
Depth Hole Open: 30
Requested Station:
Requested Easting:
Time Change: 2 hours
Requested Offset:
Equipment: Acker Renegade ,Split-Spoon Sampler, NQ
Requested Elevation:
Location Note: Over MNA Railroad
Drill No.: G-9667
Hammer Efficiency: 76%
Drilling Method: Hollow Stem Auger

Depth (ft)	Description	Elevation (ft)	Sample Type	REC % (RQD %)	Blow Counts (N_{60})	Shear Data	Field Tests	Index Tests
0	0.0-6.3' Brown, LEAN CLAY, stiff, moist	920						
5				93	4-4-5 (11)		PP = 2.50 tsf	MC = 18.5% γ_{sat} = 132 pcf(1) LL = 33 PL = 15
	6.3-34.3' Gray mottled tan, LEAN CLAY, stiff to very stiff, moist	915						
10				93	1-3-4 (9)		PP = 1.00 tsf	MC = 20.9% γ_{sat} = 129 pcf(1) LL = 33 PL = 15
		910						
15				93	2-4-6 (13)		PP = 2.00 tsf	MC = 24.5% γ_{sat} = 125 pcf(1)
		905						
20				93	1-5-6 (14)		PP = 2.50 tsf	MC = 22.4% γ_{sat} = 128 pcf(1)
		900						
25				93	4-6-9 (19)		PP = 2.25 tsf	MC = 32.6% γ_{sat} = 118 pcf(1)
		895						
30				73	3-6-10 (20)		PP = 2.50 tsf	MC = 27.6% γ_{sat} = 122 pcf(1)
		890						
35	34.3-35.1' Reddish brown, CLAYEY SAND, dense, moist, fine grained, poorly graded			93	1-4-23 (34)			LL = 36 PL = 20
	35.1-37.7' Gray, LEAN CLAY trace sand, very stiff, moist, poorly graded	885						
40								

N_{60} = (Em/60)Nm N_{60} - Corrected N value for standard 60% SPT efficiency; Em - Measured hammer efficiency in percent; Nm - Observed N-value
(1) = Assumed, (2) = Actual

Coordinate System: U.S. State Plane 1983
Coordinate Zone: Missouri West
Coordinate Proj. Factor: 1.0001017103
Coordinate Datum: NAD 83 (CONUS)
Coordinate Units: U.S. Survey Feet

* Persons using this information are cautioned that the materials shown are determined by the equipment noted and accuracy of the "log of materials" is limited thereby and by judgement of the operator. THIS INFORMATION IS FOR DESIGN PURPOSES ONLY.

LETTER BOREHOLE - MODOT 20150728.GDT - 2/5/19 15:25 - Z:\SG\GINT\PROJECT FILES\J7I3363-A8806.GPJ

Missouri Department of Transportation
Construction and Materials

BORING NO. V-19-02 (102)
Page 2 of 2

Job No.: J7I3363-A8806
County: Vernon
Route: I-49 SB
Design: A8806
Skew: 45 Deg. (LA)
Location: Nevada
Bent: 1
Logged By: Matthew Kraus
Operator: Kenny Mathews
Station: 1000+75.0
Northing: 597479.3
Date of Work: 01/08/19-01/08/19
Offset: 90.0 R
Easting: 2842790.2
Depth to Water: 10.0
Elevation: 923.4
Requested Northing:
Depth Hole Open: 30
Requested Station:
Requested Easting:
Time Change: 2 hours
Requested Offset:
Equipment: Acker Renegade ,Split-Spoon Sampler, NQ
Requested Elevation:
Location Note: Over MNA Railroad
Drill No.: G-9667
Hammer Efficiency: 76%
Drilling Method: Hollow Stem Auger

Depth (ft)	Description	Elevation (ft)	Sample Type	REC % (RQD %)	Blow Counts (N_{60})	Shear Data	Field Tests	Index Tests
40	37.7-65.4' Sancstone, reddish tan, thin bedded, soft, slightly weathered, medium to coarse grained, Argillaceous *(continued)*			133	43/0.3'			
45		880		78 (0)				
50		875		100 (28)		Qu Test Results UCS = 200 ksf MC = 0% γ_{moist} = 137.4 pcf; Qu Test Results UCS = 161 ksf MC = 0% γ_{moist} = 138.1 pcf		
55		870		100 (28)		Qu Test Results UCS = 415 ksf MC = 0% γ_{moist} = 149.2 pcf		
60		865		100 (58)		Qu Test Results UCS = 303 ksf MC = 0% γ_{moist} = 140.3 pcf		
65		860		100 (56)		Qu Test Results UCS = 226 ksf MC = 0% γ_{moist} = 140.7 pcf		
70	65.4-70.4' Sancstone, gray, thin bedded, soft, slightly weathered, medium to coarse grained, Argillaceous	855		100 (68)		Qu Test Results UCS = 240 ksf MC = 0% γ_{moist} = 138.7 pcf; Qu Test Results UCS = 273 ksf MC = 0% γ_{moist} = 139.8 pcf		
	Bottom of borehole at 70.4 feet.							

N_{60} = (Em/60)Nm N_{60} - Corrected N value for standard 60% SPT efficiency; Em - Measured hammer efficiency in percent; Nm - Observed N-value
(1) = Assumed, (2) = Actual

Coordinate System: U.S. State Plane 1983
Coordinate Zone: Missouri West
Coordinate Proj. Factor: 1.0001017103
Coordinate Datum: NAD 83 (CONUS)
Coordinate Units: U.S. Survey Feet

* Persons using this information are cautioned that the materials shown are determined by the equipment noted and accuracy of the "log of materials" is limited thereby and by judgement of the operator. THIS INFORMATION IS FOR DESIGN PURPOSES ONLY.

LETTER BOREHOLE - MODOT 20150728.GDT - 2/5/19 15:25 - Z:\SG\GINT\PROJECT FILES\J7I3363-A8806.GPJ

STATE OF MISSOURI
KEITH LAWRENCE WETTER
NUMBER E-25019
REGISTERED PROFESSIONAL ENGINEER

THIS SHEET HAS BEEN SIGNED, SEALED AND DATED ELECTRONICALLY

DATE PREPARED 7/10/2020
ROUTE I-49 | STATE MO
DISTRICT BR | SHEET NO. 28
COUNTY VERNON
JOB NO. J7I3363
CONTRACT ID.
PROJECT NO.
BRIDGE NO. A8806

DESCRIPTION | DATE

MISSOURI HIGHWAYS AND TRANSPORTATION COMMISSION
105 WEST CAPITOL
JEFFERSON CITY, MO 65102
1-888-ASK-MODOT (1-888-275-6636)

LOCHNER
16105 W. 113th Street | Suite 107 | Lenexa, KS 66219
Certificate of Authority #F00727076

BORING DATA

Note: For locations of borings, see Sheet No. 1.
Data provided by MoDOT Materials Geotechnical Section in Report dated February 5, 2019.

DESIGNED BY:	KLW	5/2020
DETAILED BY:	JTC	5/2020
CHECKED BY:	JCG	5/2020

Note: This drawing is not to scale. Follow dimensions.

REV.

Missouri Department of Transportation
Construction and Materials

BORING NO. O-19-03
Page 1 of 3

Job No.: J7I3363-A8806
Design: A8806
Bent: 4
Station: 4+01.0
Offset: 32.0 R
Elevation: 924.7
Requested Station:
Requested Offset:
Requested Elevation:
Drill No.: G-9462

County: Vernon
Skew: 45 Deg. (LA)
Logged By: Kasey Buckley
Northing: 597227.0264
Easting: 2842757.7729
Requested Northing:
Requested Easting:
Equipment: Acker Soil XLS ,Split-Spoon Sampler, NQ
Location Note: Over MNA Railroad
Hammer Efficiency: 71%

Route: I-49 SB
Location: Nevada
Operator: Raymond Murray
Date of Work: 01/09/19-01/09/19
Depth to Water: 10.0
Depth Hole Open: 25
Time Change: 1 hour
Drilling Method: Hollow Stem Auger

Depth (ft)	Graphic	Description	Elevation (ft)	Sample Type	REC % (RQD %)	Blow Counts (N_{60})	Shear Data	Field Tests	Index Tests
0		0.0-10.1' Dark gray, LEAN CLAY trace gravel, stiff, moist							
5			920						
				X	53	2-3-5 (9)		PP = 1.25 tsf	MC = 25.9% γ_{sat} = 124 pcf[1)]
10			915						
		10.1-20.1' Brown mottled, LEAN CLAY trace fine sand, trace organics, stiff, moist		X	87	5-5-6 (13)		PP = 2.00 tsf	MC = 15.8% γ_{sat} = 136 pcf[1)] LL = 26 PL = 15
15			910						
				X	87	3-7-7 (17)		PP = 3.00 tsf	MC = 16.0% γ_{sat} = 135 pcf[1)]
20			905						
		20.1-30.1' Dark gray mottled, LEAN CLAY trace fine sand, very stiff, moist		X	93	2-6-9 (18)		PP = 2.50 tsf	MC = 21.0% γ_{sat} = 129 pcf[1)] LL = 31 PL = 16
25			900						
				X	80	3-7-7 (17)		PP = 3.25 tsf	MC = 17.5% γ_{sat} = 133 pcf[1)]
30			895						
		30.1-35.1' Dark gray, LEAN CLAY trace fine sand, stiff, moist		X	80	4-3-5 (9)		PP = 3.00 tsf	MC = 30.6% γ_{sat} = 120 pcf[1)] LL = 31 PL = 17
35			890						

N_{60} = (Em/60)Nm N_{60} - Corrected N value for standard 60% SPT efficiency; Em - Measured hammer efficiency in percent; Nm - Observed N-value
(1) = Assumed, (2) = Actual

Coordinate System: U.S. State Plane 1983
Coordinate Zone: Missouri West
Coordinate Proj. Factor: 1.0001017103
Coordinate Datum: NAD 83 (CONUS)
Coordinate Units: U.S. Survey Feet

* Persons using this information are cautioned that the materials shown are determined by the equipment noted and accuracy of the "log of materials" is limited thereby and by judgement of the operator. THIS INFORMATION IS FOR DESIGN PURPOSES ONLY.

LETTER BOREHOLE - MODOT 20150728.GDT - 2/5/19 15:25 - Z:\SIGN\PROJECT FILES\J7I3363-A8806.GPJ

Missouri Department of Transportation
Construction and Materials

BORING NO. O-19-03
Page 2 of 3

Job No.: J7I3363-A8806
Design: A8806
Bent: 4
Station: 4+01.0
Offset: 32.0 R
Elevation: 924.7
Requested Station:
Requested Offset:
Requested Elevation:
Drill No.: G-9462

County: Vernon
Skew: 45 Deg. (LA)
Logged By: Kasey Buckley
Northing: 597227.0264
Easting: 2842757.7729
Requested Northing:
Requested Easting:
Equipment: Acker Soil XLS ,Split-Spoon Sampler, NQ
Location Note: Over MNA Railroad
Hammer Efficiency: 71%

Route: I-49 SB
Location: Nevada
Operator: Raymond Murray
Date of Work: 01/09/19-01/09/19
Depth to Water: 10.0
Depth Hole Open: 25
Time Change: 1 hour
Drilling Method: Hollow Stem Auger

Depth (ft)	Graphic	Description	Elevation (ft)	Sample Type	REC % (RQD %)	Blow Counts (N_{60})	Shear Data	Field Tests	Index Tests
35									
		35.1-36.2' Light gray, CLAYEY SAND, medium dense, moist, fine grained, poorly graded		X	93	3-8-24 (38)		PP = 3.00 tsf	MC = 32.3% γ_{sat} = 118 pcf[1)]
		36.2-41.3' Sancstone, brownish tan, highly weathered							
40			885						
				X	135	20-43/0.2'			
		41.3-43.2' Sancstone, brownish tan, soft, slightly weathered, medium grained, Argillaceous							
		43.2-77.4' Sancstone, dark gray, soft, slightly weathered, medium grained, Argillaceous			80 (0)				
45			880						
					92 (20)		Qu Test Results UCS = 231 ksf MC = 0% γ_{moist} = 138.3 pcf		
50			875						
					96 (50)		Qu Test Results UCS = 303 ksf MC = 0% γ_{moist} = 139.5 pcf		
55			870						
					92 (24)		Qu Test Results UCS = 309 ksf MC = 0% γ_{moist} = 143.3 pcf		
60			865						
					94 (36)		Qu Test Results UCS = 215 ksf MC = 0% γ_{moist} = 137.2 pcf		
65			860						
					100 (70)		Qu Test Results UCS = 178 ksf MC = 0% γ_{moist} = 140.2 pcf		
70			855						

N_{60} = (Em/60)Nm N_{60} - Corrected N value for standard 60% SPT efficiency; Em - Measured hammer efficiency in percent; Nm - Observed N-value
(1) = Assumed, (2) = Actual

Coordinate System: U.S. State Plane 1983
Coordinate Zone: Missouri West
Coordinate Proj. Factor: 1.0001017103
Coordinate Datum: NAD 83 (CONUS)
Coordinate Units: U.S. Survey Feet

* Persons using this information are cautioned that the materials shown are determined by the equipment noted and accuracy of the "log of materials" is limited thereby and by judgement of the operator. THIS INFORMATION IS FOR DESIGN PURPOSES ONLY.

LETTER BOREHOLE - MODOT 20150728.GDT - 2/5/19 15:25 - Z:\SIGN\PROJECT FILES\J7I3363-A8806.GPJ

BORING DATA

Note: For locations of borings, see Sheet No. 1.
Data provided by MoDOT Materials Geotechnical Section in Report dated February 5, 2019.

DESIGNED BY:	KLW	5/2020
DETAILED BY:	JTC	5/2020
CHECKED BY:	JCG	5/2020

Note: This drawing is not to scale. Follow dimensions.

STATE OF MISSOURI
KEITH LAWRENCE WETTER
NUMBER E-25019
REGISTERED PROFESSIONAL ENGINEER

THIS SHEET HAS BEEN SIGNED, SEALED AND DATED ELECTRONICALLY

DATE PREPARED 7/10/2020

ROUTE	STATE
I-49	MO
DISTRICT	SHEET NO.
BR	29

COUNTY: VERNON
JOB NO.: J7I3363
CONTRACT ID.:
PROJECT NO.:
BRIDGE NO.: A8806

DESCRIPTION | DATE

MISSOURI HIGHWAYS AND TRANSPORTATION COMMISSION
105 WEST CAPITOL
JEFFERSON CITY, MO 65102
1-888-ASK-MODOT (1-888-275-6636)

LOCHNER
1616 W. 13th Street | Suite 107 | Lenexa, KS 66219
Certificate of Authority #F00727076

REV.

Missouri Department of Transportation
Construction and Materials

BORING NO. O-19-03
Page 3 of 3

Job No.: J7I3363-A8806 **County:** Vernon **Route:** I-49 SB
Design: A8806 **Skew:** 45 Deg. (LA) **Location:** Nevada
Bent: 4 **Logged By:** Kasey Buckley **Operator:** Raymond Murray
Station: 4+01.0 **Northing:** 597227.0264 **Date of Work:** 01/09/19-01/09/19
Offset: 32.0 R **Easting:** 2842757.7729 **Depth to Water:** 10.0
Elevation: 924.7 **Requested Northing:** **Depth Hole Open:** 25
Requested Station: **Requested Easting:** **Time Change:** 1 hour
Requested Offset: **Equipment:** Acker Soil XLS ,Split-Spoon Sampler, NQ
Requested Elevation: **Location Note:** Over MNA Railroad
Drill No.: G-9462 **Hammer Efficiency:** 71% **Drilling Method:** Hollow Stem Auger

Depth (ft)	Graphic	Description	Elevation (ft)	Sample Type	REC % (RQD %)	Blow Counts (N_{60})	Shear Data	Field Tests	Index Tests
70		43.2-77.4' Sandstone, dark gray, soft, slightly weathered, medium grained, Argillaceous *(continued)*							
75			850		94 (76)		QU Test Results UCS = 207 ksf MC = 0% γ_{moist} = 140.9 pcf		
80		77.4-80.3' Sandstone, light gray, soft, slightly weathered, medium grained	845		100 (68)		QU Test Results UCS = 322 ksf MC = 0% γ_{moist} = 140 pcf		
		Bottom of borehole at 80.3 feet.							

N_{60} = (Em/60)Nm N_{60} - Corrected N value for standard 60% SPT efficiency; Em - Measured hammer efficiency in percent; Nm - Observed N-value
(1) = Assumed, (2) = Actual

Coordinate System: U.S. State Plane 1983 **Coordinate Zone:** Missouri West **Coordinate Proj. Factor:** 1.0001017103
Coordinate Datum: NAD 83 (CONUS) **Coordinate Units:** U.S. Survey Feet

* Persons using this information are cautioned that the materials shown are determined by the equipment noted and accuracy of the "log of materials" is limited thereby and by judgement of the operator. THIS INFORMATION IS FOR DESIGN PURPOSES ONLY.

LETTER BOREHOLE - MODOT 20150728.GDT - 2/5/19 15:25 - Z:\SG\GINT\PROJECT FILES\J7I3363-A8806.GPJ

Missouri Department of Transportation
Construction and Materials

BORING NO. O-19-02
Page 1 of 3

Job No.: J7I3363-A8806 **County:** Vernon **Route:** I-49 SB
Design: A8806 **Skew:** 45 Deg. (LA) **Location:** Nevada
Bent: 4 **Logged By:** Kasey Buckley **Operator:** Raymond Murray
Station: 4+02.0 **Northing:** 597278.0531 **Date of Work:** 01/08/19-01/08/19
Offset: 90.0 R **Easting:** 2842730.1998 **Depth to Water:** 10.0
Elevation: 924.2 **Requested Northing:** **Depth Hole Open:** 25
Requested Station: **Requested Easting:** **Time Change:** 1 hour
Requested Offset: **Equipment:** Acker Soil XLS ,Split-Spoon Sampler, NQ
Requested Elevation: **Location Note:** Over MNA Railroad
Drill No.: G-9462 **Hammer Efficiency:** 71% **Drilling Method:** Hollow Stem Auger

Depth (ft)	Graphic	Description	Elevation (ft)	Sample Type	REC % (RQD %)	Blow Counts (N_{60})	Shear Data	Field Tests	Index Tests
0		0.0-10.1' Grayish brown mottled, LEAN CLAY trace gravel, stiff, moist							
5			920	X		2-5-7 (14)		PP = 1.50 tsf	MC = 22.0% γ_{dst} = 128 pcf(1)
10			915						
		10.1-15.7' Grayish tan, SILTY LEAN CLAY, stiff, moist		X		4-4-7 (13)		PP = 1.50 tsf	MC = 18.2% γ_{dst} = 133 pcf(1) LL = 22 PL = 15
15			910						
		15.7-30.1' Gray mottled, LEAN CLAY trace fine sand, stiff, moist		X		3-4-6 (12)		PP = 1.75 tsf	MC = 20.8% γ_{dst} = 129 pcf(1)
20			905	X		3-8-9 (20)		PP = 3.00 tsf	MC = 20.3% γ_{dst} = 130 pcf(1) LL = 29 PL = 16
25			900	X		5-7-9 (19)		PP = 3.00 tsf	MC = 16.8% γ_{dst} = 134 pcf(1)
30		30.1-36.1' Gray mottled, FAT CLAY, very stiff	895	X		3-4-4 (9)		PP = 2.25 tsf	MC = 31.0% γ_{dst} = 120 pcf(1) LL = 55 PL = 25
35			890						

N_{60} = (Em/60)Nm N_{60} - Corrected N value for standard 60% SPT efficiency; Em - Measured hammer efficiency in percent; Nm - Observed N-value
(1) = Assumed, (2) = Actual

Coordinate System: U.S. State Plane 1983 **Coordinate Zone:** Missouri West **Coordinate Proj. Factor:** 1.0001017103
Coordinate Datum: NAD 83 (CONUS) **Coordinate Units:** U.S. Survey Feet

* Persons using this information are cautioned that the materials shown are determined by the equipment noted and accuracy of the "log of materials" is limited thereby and by judgement of the operator. THIS INFORMATION IS FOR DESIGN PURPOSES ONLY.

LETTER BOREHOLE - MODOT 20150728.GDT - 2/5/19 15:25 - Z:\SG\GINT\PROJECT FILES\J7I3363-A8806.GPJ

BORING DATA

Note: For locations of borings, see Sheet No. 1.
Data provided by MoDOT Materials Geotechnical Section in Report dated February 5, 2019.

DESIGNED BY:	KLW	5/2020
DETAILED BY:	JTC	5/2020
CHECKED BY:	JCG	5/2020

Note: This drawing is not to scale. Follow dimensions.

STATE OF MISSOURI
KEITH LAWRENCE WETTER
NUMBER E-25019
REGISTERED PROFESSIONAL ENGINEER
THIS SHEET HAS BEEN SIGNED, SEALED AND DATED ELECTRONICALLY

DATE PREPARED 7/10/2020
ROUTE I-49 | STATE MO
DISTRICT BR | SHEET NO. 30
COUNTY VERNON
JOB NO. J7I3363
CONTRACT ID.
PROJECT NO.
BRIDGE NO. A8806

DESCRIPTION
DATE

MISSOURI HIGHWAYS AND TRANSPORTATION COMMISSION
105 WEST CAPITOL
JEFFERSON CITY, MO 65102
1-888-ASK-MODOT (1-888-275-6636)

LOCHNER
16105 W. 113th Street | Suite 107 | Lenexa, KS 66219
Certificate of Authority #F00727076

REV.

Missouri Department of Transportation
Construction and Materials

BORING NO. O-19-02
Page 2 of 3

Job No.: J7I3363-A8806 **County:** Vernon **Route:** I-49 SB
Design: A8806 **Skew:** 45 Deg. (LA) **Location:** Nevada
Bent: 4 **Logged By:** Kasey Buckley **Operator:** Raymond Murray
Station: 4+02.0 **Northing:** 597278.0531 **Date of Work:** 01/08/19-01/08/19
Offset: 90.0 R **Easting:** 2842730.1998 **Depth to Water:** 10.0
Elevation: 924.2 **Requested Northing:** **Depth Hole Open:** 25
Requested Station: **Requested Easting:** **Time Change:** 1 hour
Requested Offset: **Equipment:** Acker Soil XLS ,Split-Spoon Sampler, NQ
Requested Elevation: **Location Note:** Over MNA Railroad
Drill No.: G-9462 **Hammer Efficiency:** 71% **Drilling Method:** Hollow Stem Auger

Depth (ft)	Graphic	Description	Elevation (ft)	Sample Type	REC % (RQD %)	Blow Counts (N_{60})	Shear Data	Field Tests	Index Tests
35		30.1-36.1' Gray mottled, FAT CLAY, very stiff *(continued)*				2-8-13 (25)		PP = 2.25 tsf	
		36.1-37.7' Light gray, CLAYEY SAND, medium dense, moist, fine grained, poorly graded	885						
40		37.7-40.6' Sandstone, brown, highly weathered				43/0.3'			
		40.6-45.6' Sandstone, brown, thin bedded, soft, slightly weathered, medium grained, Argillaceous	880		62 (0)				
45		45.6-74.4' Sandstone, dark brown, thin bedded, soft to medium hard, slightly weathered, medium grained, Argillaceous	875		100 (42)		Qu Test Results UCS = 360 ksf MC = 0% γ_{moist} = 142.4 pcf		
50			870		100 (22)		Qu Test Results UCS = 263 ksf MC = 0% γ_{moist} = 139 pcf		
55			865		100 (49)		Qu Test Results UCS = 257 ksf MC = 0% γ_{moist} = 140.6 pcf		
60			860		98 (29)		Qu Test Results UCS = 451 ksf MC = 0% γ_{moist} = 155.8 pcf		
65			855		100 (22)		Qu Test Results UCS = 344 ksf MC = 0% γ_{moist} = 138.2 pcf		
70									

N_{60} = (Em/60)Nm N_{60} - Corrected N value for standard 60% SPT efficiency; Em - Measured hammer efficiency in percent; Nm - Observed N-value
(1) = Assumed, (2) = Actual

Coordinate System: U.S. State Plane 1983 **Coordinate Zone:** Missouri West **Coordinate Proj. Factor:** 1.0001017103
Coordinate Datum: NAD 83 (CONUS) **Coordinate Units:** U.S. Survey Feet

* Persons using this information are cautioned that the materials shown are determined by the equipment noted and accuracy of the "log of materials" is limited thereby and by judgement of the operator. THIS INFORMATION IS FOR DESIGN PURPOSES ONLY.

LETTER BOREHOLE - MODOT 20150728.GDT - 2/5/19 15:25 - Z:\SG\GINT\PROJECT FILES\J7I3363-A8806.GPJ

Missouri Department of Transportation
Construction and Materials

BORING NO. O-19-02
Page 3 of 3

Job No.: J7I3363-A8806 **County:** Vernon **Route:** I-49 SB
Design: A8806 **Skew:** 45 Deg. (LA) **Location:** Nevada
Bent: 4 **Logged By:** Kasey Buckley **Operator:** Raymond Murray
Station: 4+02.0 **Northing:** 597278.0531 **Date of Work:** 01/08/19-01/08/19
Offset: 90.0 R **Easting:** 2842730.1998 **Depth to Water:** 10.0
Elevation: 924.2 **Requested Northing:** **Depth Hole Open:** 25
Requested Station: **Requested Easting:** **Time Change:** 1 hour
Requested Offset: **Equipment:** Acker Soil XLS ,Split-Spoon Sampler, NQ
Requested Elevation: **Location Note:** Over MNA Railroad
Drill No.: G-9462 **Hammer Efficiency:** 71% **Drilling Method:** Hollow Stem Auger

Depth (ft)	Graphic	Description	Elevation (ft)	Sample Type	REC % (RQD %)	Blow Counts (N_{60})	Shear Data	Field Tests	Index Tests
70		45.6-74.4' Sandstone, dark brown, thin bedded, soft to medium hard, slightly weathered, medium grained, Argillaceous *(continued)*	850		100 (28)		Qu Test Results UCS = 815 ksf MC = 0% γ_{moist} = 165.1 pcf		
75		74.4-80.6' Sandstone, light gray, thin bedded, soft, slightly weathered, medium grained	845		100 (94)		Qu Test Results UCS = 198 ksf MC = 0% γ_{moist} = 154.1 pcf		
80		Bottom of borehole at 80.6 feet.							

N_{60} = (Em/60)Nm N_{60} - Corrected N value for standard 60% SPT efficiency; Em - Measured hammer efficiency in percent; Nm - Observed N-value
(1) = Assumed, (2) = Actual

Coordinate System: U.S. State Plane 1983 **Coordinate Zone:** Missouri West **Coordinate Proj. Factor:** 1.0001017103
Coordinate Datum: NAD 83 (CONUS) **Coordinate Units:** U.S. Survey Feet

* Persons using this information are cautioned that the materials shown are determined by the equipment noted and accuracy of the "log of materials" is limited thereby and by judgement of the operator. THIS INFORMATION IS FOR DESIGN PURPOSES ONLY.

LETTER BOREHOLE - MODOT 20150728.GDT - 2/5/19 15:25 - Z:\SG\GINT\PROJECT FILES\J7I3363-A8806.GPJ

BORING DATA

Note: For locations of borings, see Sheet No. 1.
Data provided by MoDOT Materials Geotechnical Section in Report dated February 5, 2019.

DESIGNED BY:	KLW	5/2020
DETAILED BY:	JTC	5/2020
CHECKED BY:	JCG	5/2020

Note: This drawing is not to scale. Follow dimensions.

STATE OF MISSOURI
KEITH LAWRENCE WETTER
NUMBER E-25019
REGISTERED PROFESSIONAL ENGINEER

THIS SHEET HAS BEEN SIGNED, SEALED AND DATED ELECTRONICALLY

DATE PREPARED 7/10/2020

ROUTE	STATE
I-49	MO
DISTRICT	SHEET NO.
BR	31

COUNTY: VERNON
JOB NO.: J7I3363
CONTRACT ID.:
PROJECT NO.:
BRIDGE NO.: A8806

DESCRIPTION | DATE

MISSOURI HIGHWAYS AND TRANSPORTATION COMMISSION
105 WEST CAPITOL
JEFFERSON CITY, MO 65102
1-888-ASK-MODOT (1-888-275-6636)

LOCHNER
1616 W. 13th Street | Suite 107 | Lenexa, KS 66219
Certificate of Authority #F00727076

REV.

B_A8806_031_J7I3363_BORING LOG_05.dgn 4:24:51 PM 7/9/2020

MISSOURI HIGHWAYS AND TRANSPORTATION COMMISSION

SEC/SUR 14 TWP 35N RGE 31W

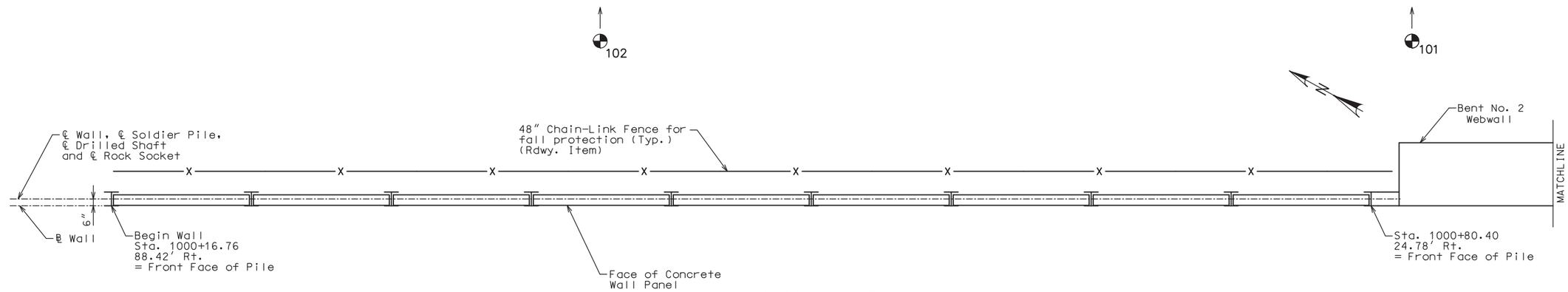

PART WALL PLAN

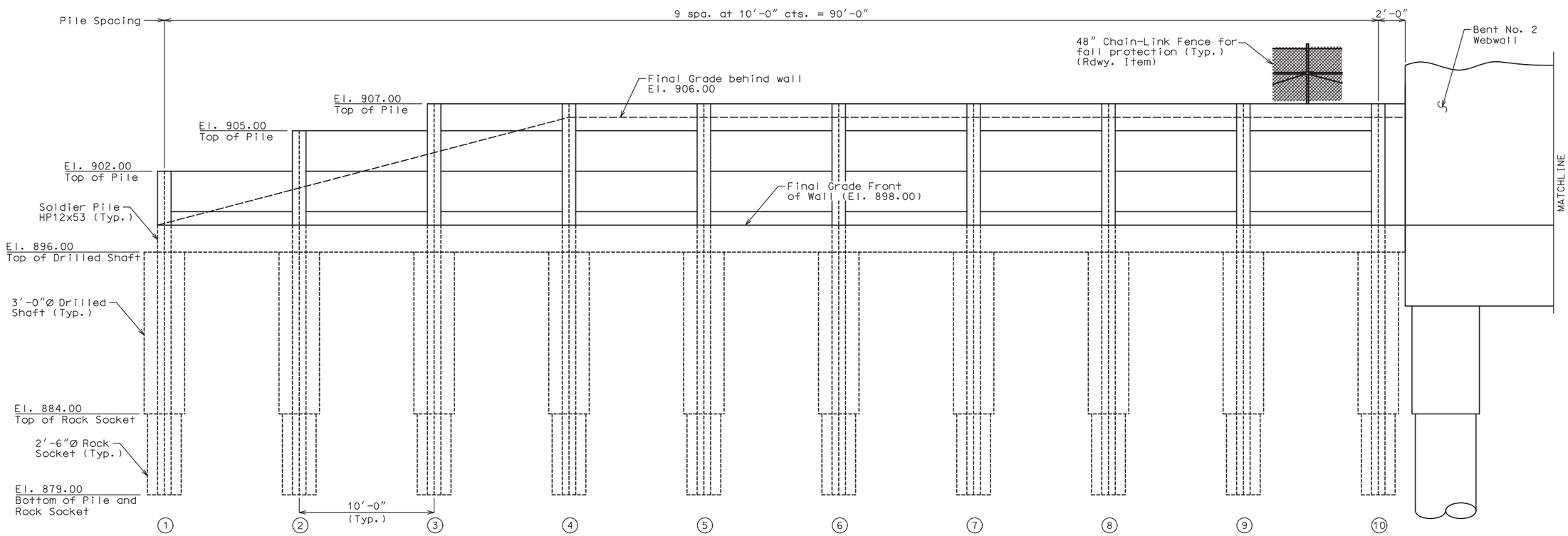

PART WALL ELEVATION

BENCH MARKS - NAVD 1988 GEOID 12A

BM #1 - 8" SPIKE W/ CENTER DIVET
(CONTROL POINT #1) STA. 1000+78.99
OFFSET 0.34' RT, ℄ RTE I-49 ELEV. 923.46

BM #2 - 8" SPIKE W/ CENTER DIVET
(CONTROL POINT #2) STA. 1002+83.15
OFFSET 4.67' LT, ℄ RTE I-49 ELEV. 922.62

Note:
See Missouri Standard Plans Drawing 607.10 for Chain Link Fence.

WALL A9030
NORTH RETAINING WALL AT INTERMEDIATE BENT NO. 2
(SHEET 1 OF 2)

Note: This drawing is not to scale. Follow dimensions.

RETAINING WALL AT ROUTE I-49 SBL OVER MNA RAILROAD

STATE ROUTE I-49

ABOUT 4.5 MILES S.E. OF NEVADA

Sheet No. 1 of 7

DESIGNED BY:	KLW	6/2020
DETAILED BY:	JTC	6/2020
CHECKED BY:	NSC	8/2020

STD. 607.10
STD. 706.35

STATE OF MISSOURI
KEITH LAWRENCE WETTER
NUMBER E-25019
REGISTERED PROFESSIONAL ENGINEER

THIS SHEET HAS BEEN SIGNED, SEALED AND DATED ELECTRONICALLY

DATE PREPARED	
9/3/2020	
ROUTE	STATE
I-49	MO
DISTRICT	SHEET NO.
BR	1
COUNTY	
VERNON	
JOB NO.	
J7I3363	
CONTRACT ID.	
PROJECT NO.	
BRIDGE NO.	
A9030	

DESCRIPTION | DATE

MISSOURI HIGHWAYS AND TRANSPORTATION COMMISSION
105 WEST CAPITOL
JEFFERSON CITY, MO 65102
1-888-ASK-MODOT (1-888-275-6636)

LOCHNER
16105 W. 113th Street | Suite 107 | Lenexa, KS 66219
Certificate of Authority #F00727076

REV.

B_A9030_001_J7I3363_RETAINING WALL_BENT 2_01.dgn 6:13:38 PM 9/2/2020

"⊕" Indicates location of Borings

Notice and Disclaimer Regarding Boring Log Data

The locations of all subsurface borings for this structure are shown on the plan sheets for Bridge A8806. The boring data for all locations indicated, as well as any other boring logs or other factual records of subsurface data and investigations performed by the department for the design of the project, are shown on plan sheets for Bridge A8806 and may be included in the Electronic Bridge Deliverables.
They will also be available from the Project Contact upon written request. No greater significance or weight should be given to the boring data depicted on the plan sheets than is given to the subsurface data available from the district or elsewhere.

The Commission does not represent or warrant that any such boring data accurately depicts the conditions to be encountered in constructing this project. A contractor assumes all risks it may encounter in basing its bid prices, time or schedule of performance on the boring data depicted here or those available from the district, or on any other documentation not expressly warranted, which the contractor may obtain from the Commission.

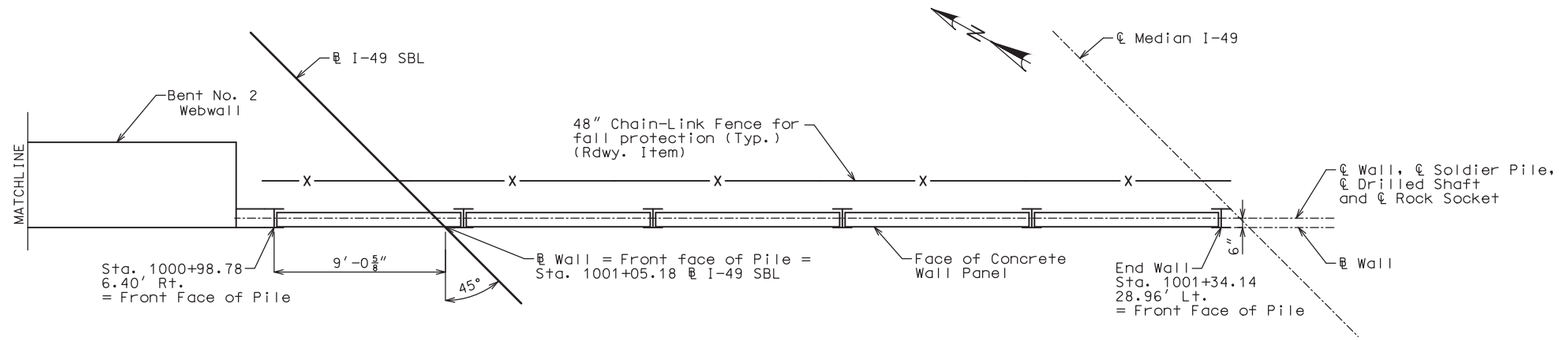

PART WALL PLAN

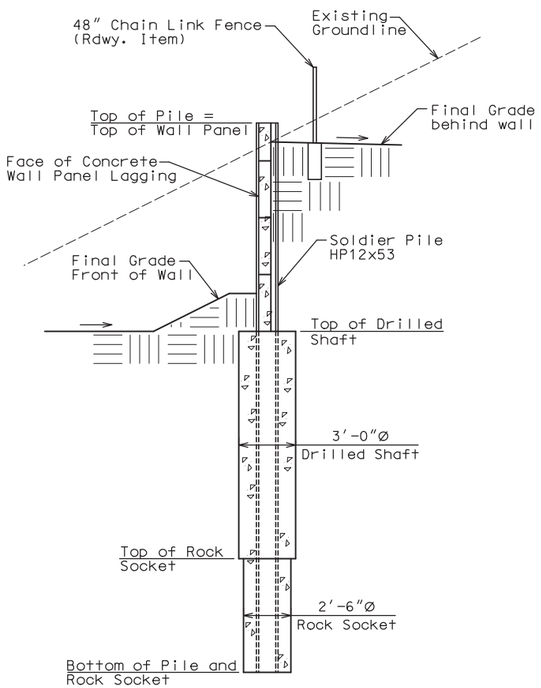

TYPICAL SECTION

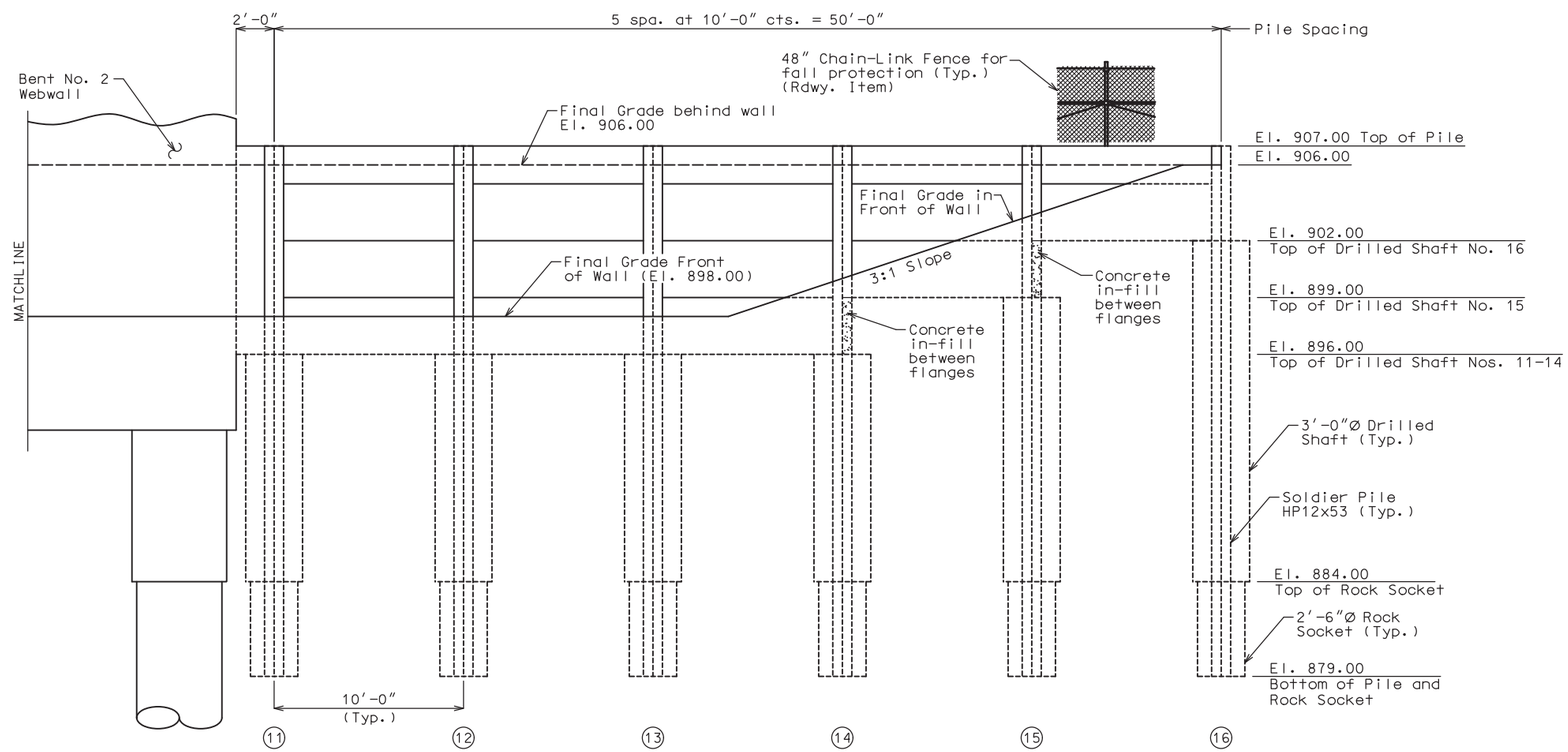

PART WALL ELEVATION

Note:
See Missouri Standard Plans Drawing 607.10 for Chain Link Fence.

WALL A9030
NORTH RETAINING WALL AT INTERMEDIATE BENT NO. 2
(SHEET 2 OF 2)

Note: This drawing is not to scale. Follow dimensions.

Sheet No. 2 of 7

DESIGNED BY:	KLW	6/2020
DETAILED BY:	JTC	6/2020
CHECKED BY:	NSC	8/2020

STATE OF MISSOURI
KEITH LAWRENCE WETTER
NUMBER E-25019
REGISTERED PROFESSIONAL ENGINEER

THIS SHEET HAS BEEN SIGNED, SEALED AND DATED ELECTRONICALLY

DATE PREPARED 9/3/2020

ROUTE	STATE
I-49	MO
DISTRICT	SHEET NO.
BR	2

COUNTY VERNON

JOB NO. J7I3363

CONTRACT ID.

PROJECT NO.

BRIDGE NO. A9030

DESCRIPTION	DATE

MISSOURI HIGHWAYS AND TRANSPORTATION COMMISSION
105 WEST CAPITOL
JEFFERSON CITY, MO 65102
1-888-ASK-MODOT (1-888-275-6636)

LOCHNER
16105 W. 113th Street | Suite 107 | Lenexa, KS 66219
Certificate of Authority #F00727076

REV.

B_A9030_002_J7I3363_RETAINING WALL_BENT 2_02.dgn 6:14:01 PM 9/2/2020

GENERAL NOTES:

Design Specifications:
2015 American Railway Engineering and Maintenance-of-Way Association (AREMA) Manual for Railway Engineering

Design Loading:
Structural Steel: AREMA Allowable Stress Design
Concrete: AREMA Load Factor Design
Earth 120 lb/cf.
Equivalent Fluid Pressure = 46.86 lb/cf
Ø = 26 degrees

Design Unit Stresses:

Class B-1 Concrete (Precast Panel Lagging)	f'c = 4,000 psi
Class B-2 Concrete (Drilled Shafts & Rock Sockets)	f'c = 4,000 psi
Reinforcing Steel (Grade 60)	fy = 60,000 psi
Structural Steel HP Pile (ASTM A709 Grade 50S)	fy = 50,000 psi fs = 27,500 psi

Joint Filler:
All joint filler shall be in accordance with Sec 1057 for preformed sponge rubber expansion and partition joint filler, except as noted.

Reinforcing Steel:
Minimum clearance to reinforcing steel shall be 1½", unless otherwise shown.

Traffic Handling:
Structure to be closed during construction. Traffic to be maintained on temporary bypass during construction. See roadway plans for traffic control.

Miscellaneous:
All concrete for the precast wall panels shall be Class B-1.

The wall shall be built vertical.

The contractor shall protect the galvanized surfaces of the soldier pile during installation and placement of backfill.

Retaining Wall Notes:
Retaining wall structures to be built in conjunction with Bridge A8806.

Groundline behind walls shall be graded (Rdwy Item) to near final elevation prior to drilling soldier pile foundations.

Construction of soldier pile foundations adjacent to intermediate bents shall be constructed in a manner that is compatible with the Intermediate Bent foundation construction.

Placement of Rock Blanket (Rdwy Item) and use of heavy construction equipment behind wall (within 10 feet) shall be completed prior to excavation in front of wall.

Concrete closure pour between Intermediate Bents and adjacent soldier pile shall be constructed with Class B-1 Concrete.

Construct a concrete in-fill to support the end of upper panels at pile 14 and 15. An alternate method of panel support may be proposed by the Contractor as approved by the Engineer.

Use precast concrete lagging installed between flanges of steel soldier pile.

Use typical 10'-0" soldier pile spacing.

Steel soldier pile shall be founded in unreinforced drilled shafts and rock sockets.

Backfill in drilled pile holes above top of drilled shaft elevation shall be backfilled with low strength, excavatable flowable fill.

Excavation in front of wall (Rdwy Item) and precast panel installation shall not commence until the concrete in the shafts has reached 3,000 psi compressive strength, but no sooner than 14 days after concrete placement.

Construction clearance to existing CL MNA track shall be 15'-0" minimum.

Fall protection fencing shall be 48" chain link fence (Std. 607.10) (Rdwy. Item)

Union Pacific Railroad
Overhead Structure Construction Notes

1. The proposed grade separation project shall not increase the quantity and/or characteristics of the flow in the Railroad's ditches and/or drainage structures.
2. The elevation of the existing top-of-rail profile shall be verified before beginning construction. All discrepancies shall be brought to the attention of the Railroad prior to construction.
3. The contractor must submit a proposed method of erosion and sediment control and have the method approved by the Railroad.
4. All shoring systems that impact the Railroad's operation and/or supports the Railroad's embankment shall be designed and constructed per current Railroad Guidelines for Temporary Shoring.
5. All demolitions within the Railroad's right-of-way and/or demolition that may impact the Railroad's tracks or operations shall be in compliance with the Railroad's Demolition Guidelines.
6. Erection over the Railroad's right-of-way shall be designed to cause no interruption to the Railroad's operation, enabling the track(s) to remain open to traffic per the Railroad's requirements.
7. Railroad requirements do not allow work within 50 feet of track centerline when a train passes the work site and all personnel must clear the area within 25 feet of the track centerline and secure all equipment.
8. False-work clearances shall comply with minimum construction clearances.
9. All permanent clearances shall be verified before project closing.

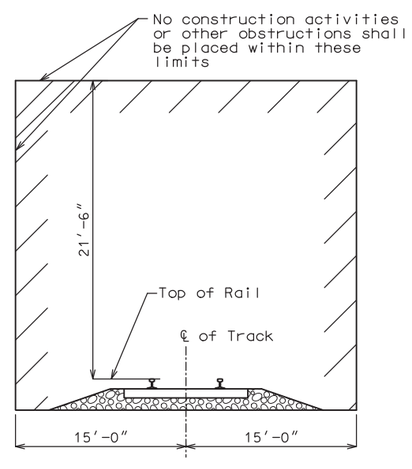

MINIMUM CONSTRUCTION CLEARANCE ENVELOPE
(Normal to Railroad)

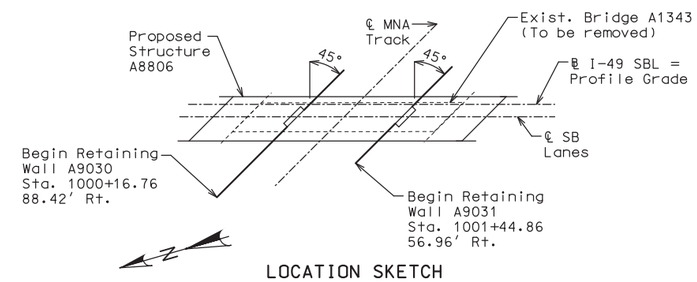

LOCATION SKETCH

DESIGNED BY:	KLW	6/2020
DETAILED BY:	JTC	6/2020
CHECKED BY:	NSC	8/2020

Note: This drawing is not to scale. Follow dimensions.

GENERAL NOTES

STATE OF MISSOURI
KEITH LAWRENCE WETTER
NUMBER E-25019
REGISTERED PROFESSIONAL ENGINEER
THIS SHEET HAS BEEN SIGNED, SEALED AND DATED ELECTRONICALLY

DATE PREPARED 9/3/2020

ROUTE	STATE
I-49	MO
DISTRICT	SHEET NO.
BR	3

COUNTY VERNON
JOB NO. J7I3363
CONTRACT ID.
PROJECT NO.
BRIDGE NO. A9030

DATE	DESCRIPTION

MISSOURI HIGHWAYS AND TRANSPORTATION COMMISSION
105 WEST CAPITOL
JEFFERSON CITY, MO 65102
1-888-ASK-MODOT (1-888-275-6636)

LOCHNER
16105 W. 113th Street | Suite 107 | Lenexa, KS 66219
Certificate of Authority #F00727076

REV.

Foundation Data

Type	Design Data		North Retaining Wall
Soldier Pile	Pile Type and Size		HP 12x53
	Number	ea.	16
	Length per Each	ft.	*
	Min. Galvanized Penetration (Elev.)	ft.	Full Length
Rock Socket	Number	ea.	16
	Foundation Material		Strong Rock
	Elevation Range	ft.	880-844
	Resistance Factor (Tip Resistance)		0.49
	Design End Bearing Minimum Nominal Axial Compressive Resistance (Tip Resistance)	ksf	29

* See Typical Wall Details sheet or Wall Elevation sheets for Pile Lengths.

Additional Notes:
Pile:
The pile shall be placed in the center of the drilled shaft and shall not be driven.

In order to prevent cave-in, the drill hole above the top of concrete drilled shaft shall be temporarily filled with sand or low strength flowable fill material that can be excavated during concrete lagging panel installation.

Rock Socket (Drilled Shafts):

The use of temporary casing is anticipated.

Minimum Nominal Axial Compressive Resistance (Tip Resistance) = Maximum Factored Loads/Resistance Factors

Foundation Inspection Holes and Video Camera Inspection shall be performed on drilled shafts and rock sockets at the discretion of the Engineer.

Estimated Quantities

Item		Quantity
Drilled Shafts (3 ft. 0 in. Dia.)	L.F.	201.0
Rock Sockets (2 ft. 6 in. Dia.)	L.F.	80.0
Video Camera Inspection	EACH	4
Foundation Inspection Holes	L.F.	60.0
Galvanized Structural Steel Piles (12 in.)	L.F.	441
Precast Concrete Wall Panels	S.F.	1335

Estimated Quantities for Precast Concrete Wall Panels

Item		Quantity
Class B-1 Concrete	C.Y.	38.9
Reinforcing Steel (Retaining Walls)	POUND	6,960

The table of Estimated Quantities for Precast Concrete Wall Panels represents the quantities used by the State in preparing the cost estimate for the wall. The area of the precast concrete wall panels used for lagging will be measured to the nearest square foot from the neatlines of the precast panels dimensioned in the plans. Payment for reinforced precast concrete panels, closure pours, concrete in-fill supports and reinforcing steel will be considered completely covered by the contract unit price for the panels. Variations may be encountered in the estimated quantities but the variations cannot be used for an adjustment in the contract unit price.

STATE OF MISSOURI
KEITH LAWRENCE WETTER
NUMBER E-25019
REGISTERED PROFESSIONAL ENGINEER

THIS SHEET HAS BEEN SIGNED, SEALED AND DATED ELECTRONICALLY

DATE PREPARED 9/3/2020

ROUTE	STATE
I-49	MO
DISTRICT	SHEET NO.
BR	4

COUNTY: VERNON
JOB NO.: J7I3363
CONTRACT ID.:
PROJECT NO.:
BRIDGE NO.: A9030

DATE	DESCRIPTION

MISSOURI HIGHWAYS AND TRANSPORTATION COMMISSION
105 WEST CAPITOL
JEFFERSON CITY, MO 65102
1-888-ASK-MODOT (1-888-275-6636)

LOCHNER
16105 W. 113th Street | Suite 107 | Lenexa, KS 66219
Certificate of Authority #F00727076

DESIGNED BY:	KLW	7/2020
DETAILED BY:	JTC	8/2020
CHECKED BY:	NSC	8/2020

QUANTITIES AND FOUNDATION DATA

Note: This drawing is not to scale. Follow dimensions.

REV.

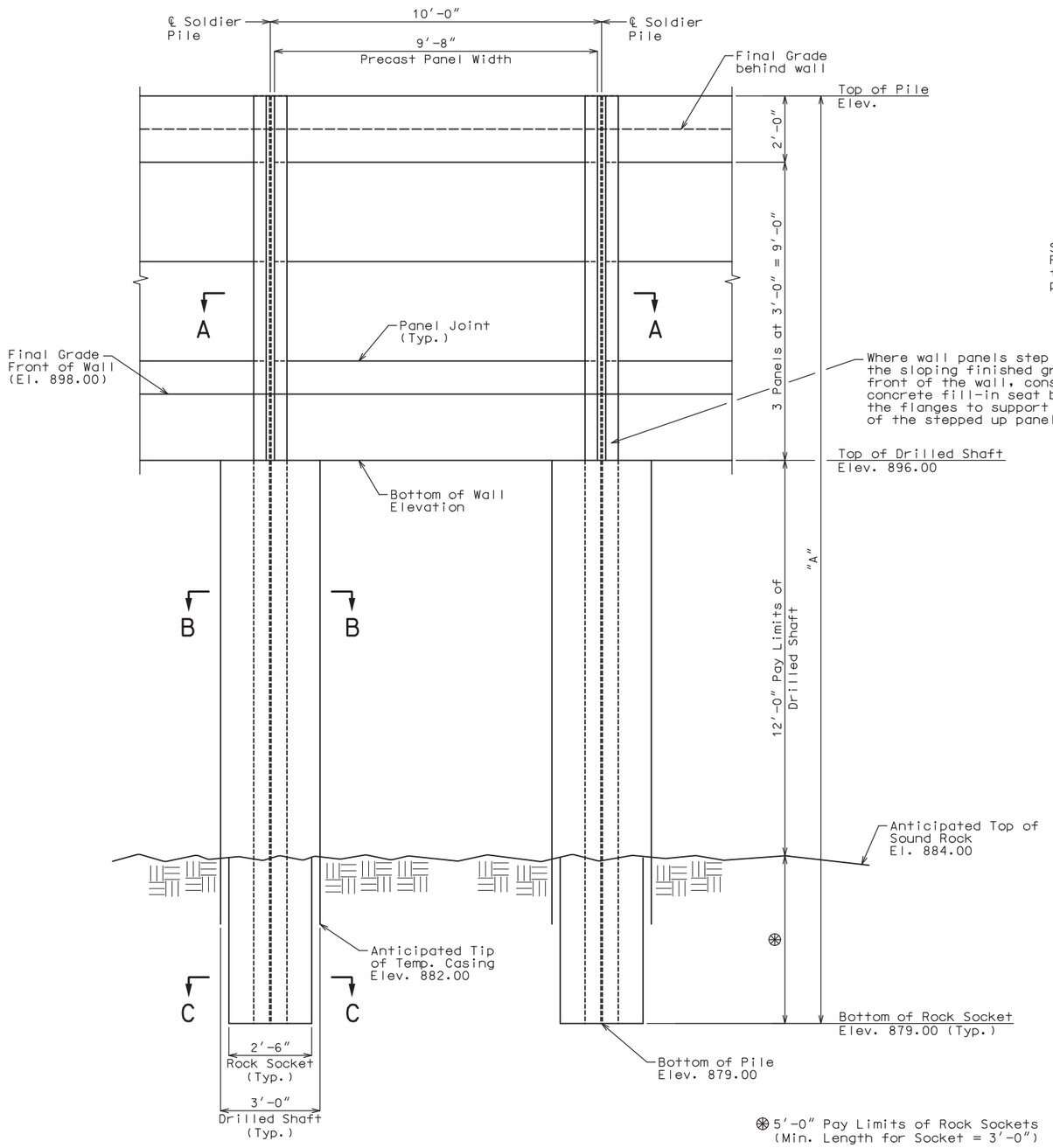

TYPICAL PART WALL ELEVATION

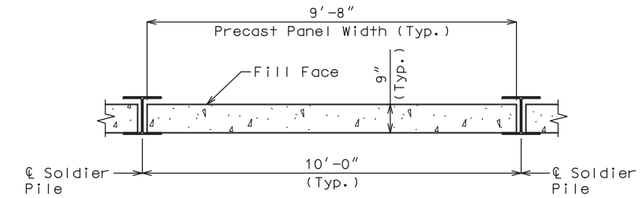

SECTION A-A

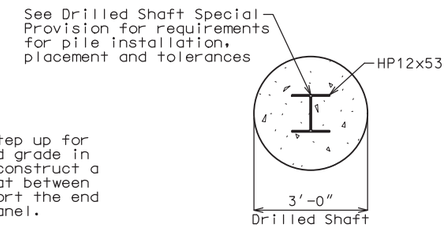

SECTION B-B

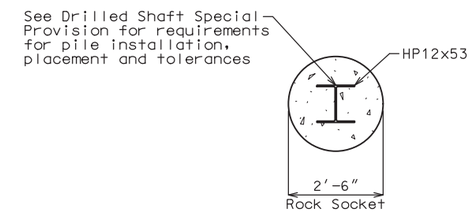

SECTION C-C

North Wall Pile Information Table		
Pile	Top of Pile Elev.	Length of Pile, A (ft)
1	902.00	23
2	905.00	26
3	907.00	28
4	907.00	28
5	907.00	28
6	907.00	28
7	907.00	28
8	907.00	28
9	907.00	28
10	907.00	28
11	907.00	28
12	907.00	28
13	907.00	28
14	907.00	28
15	907.00	28
16	907.00	28

Notes:
Top of Sound Rock Elevation may vary, however minimum length of Rock Socket shall be 3′-0″.

For layout of precast panels, see Sheet Nos. 1 and 2.

For details of precast panels, see Sheet No. 6.

TYPICAL WALL DETAILS

DESIGNED BY:	KLW	7/2020
DETAILED BY:	JTC	7/2020
CHECKED BY:	NSC	8/2020

Note: This drawing is not to scale. Follow dimensions.

STATE OF MISSOURI
KEITH LAWRENCE WETTER
NUMBER E-25019
REGISTERED PROFESSIONAL ENGINEER

THIS SHEET HAS BEEN SIGNED, SEALED AND DATED ELECTRONICALLY

DATE PREPARED	
9/3/2020	
ROUTE	STATE
I-49	MO
DISTRICT	SHEET NO.
BR	5
COUNTY	
VERNON	
JOB NO.	
J7I3363	
CONTRACT ID.	
PROJECT NO.	
BRIDGE NO.	
A9030	

DESCRIPTION | DATE

MISSOURI HIGHWAYS AND TRANSPORTATION COMMISSION
105 WEST CAPITOL
JEFFERSON CITY, MO 65102
1-888-ASK-MODOT (1-888-275-6636)

LOCHNER
16105 W. 113th Street | Suite 107 | Lenexa, KS 66219
Certificate of Authority #F00727076

REV.

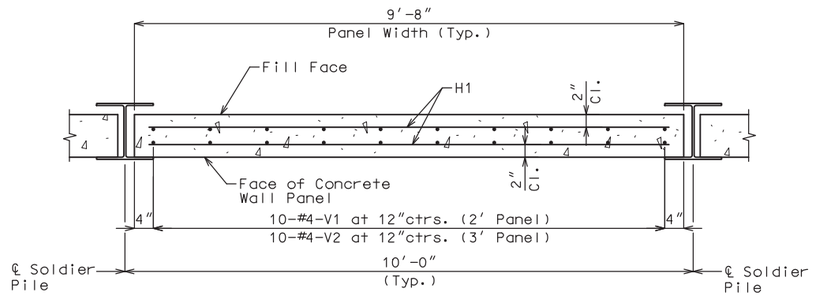

TYPICAL LAGGING PANEL PLAN

Notes:

For panel locations, see Sheet Nos. 1 and 2.

Fabricator shall be responsible for location and design of all lifting devices.

All concrete for the precast wall panel and closure pours shall be Class B-1.

Payment for all concrete and reinforcement, joint material, complete in place (Including that of the closure pours and concrete in-fills for panel support) will be considered completely covered by the contract unit price for Precast Concrete Wall Panels per square foot.

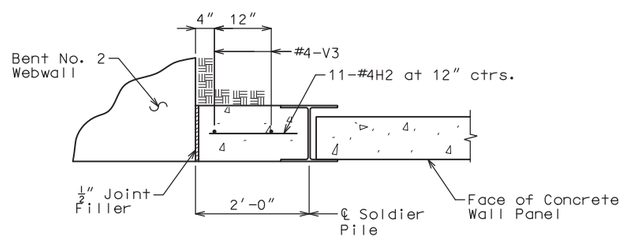

TYPICAL CLOSURE POUR DETAIL

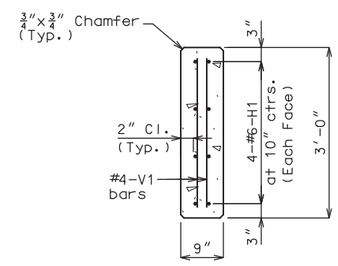

3′ PANEL

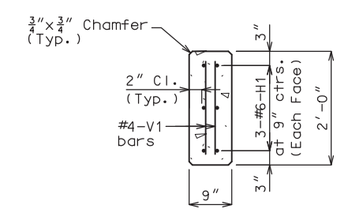

2′ PANEL

BILL OF REINFORCING STEEL - EACH CLOSURE POUR					
NO.	SIZE & MARK	NOMINAL LENGTH	ACTUAL LENGTH	SHAPE	BENDING DIAGRAM
2	4 V3	10′-6″	10′-6″	20	B
11	4 H2	20″	20″	20	SHAPE 20

Notes:

The following information only quantities are for each closure pour:

Total number of closures = 2
Volume of concrete per closure = 0.82 cu. yds.
Weight of reinforcement per closure = 26 lbs.

BILL OF REINFORCING STEEL - EACH 3′ PANEL					
NO.	SIZE & MARK	NOMINAL LENGTH	ACTUAL LENGTH	SHAPE	BENDING DIAGRAM
20	4 V2	2′-8″	2′-8″	20	B
8	6 H1	9′-4″	9′-4″	20	SHAPE 20

Notes:

The following information only quantities are for each 3′ tall panel:

Total number of panels = 38
Volume of concrete per panel = 0.81 cu. yds.
Weight of reinforcement per panel = 148 lbs.

BILL OF REINFORCING STEEL - EACH 2′ PANEL					
NO.	SIZE & MARK	NOMINAL LENGTH	ACTUAL LENGTH	SHAPE	BENDING DIAGRAM
20	4 V1	20″	20″	20	B
6	6 H1	9′-4″	9′-4″	20	SHAPE 20

Notes:

The following information only quantities are for each 2′ tall panel:

Total number of panels = 12
Volume of concrete per panel = 0.54 cu. yds.
Weight of reinforcement per panel = 107 lbs.

PRECAST CONCRETE LAGGING PANEL DETAILS

DESIGNED BY:	KLW	7/2020
DETAILED BY:	JTC	7/2020
CHECKED BY:	NSC	8/2020

Note: This drawing is not to scale. Follow dimensions.

STATE OF MISSOURI
KEITH LAWRENCE WETTER
NUMBER E-25019
REGISTERED PROFESSIONAL ENGINEER

THIS SHEET HAS BEEN SIGNED, SEALED AND DATED ELECTRONICALLY

DATE PREPARED 9/3/2020

ROUTE	STATE
I-49	MO
DISTRICT	SHEET NO.
BR	6

COUNTY VERNON
JOB NO. J7I3363
CONTRACT ID.
PROJECT NO.
BRIDGE NO. A9030

DATE	DESCRIPTION

MISSOURI HIGHWAYS AND TRANSPORTATION COMMISSION
105 WEST CAPITOL
JEFFERSON CITY, MO 65102
1-888-ASK-MODOT (1-888-275-6636)

LOCHNER
16105 W. 113th Street | Suite 107 | Lenexa, KS 66219
Certificate of Authority #F00727076

REV.

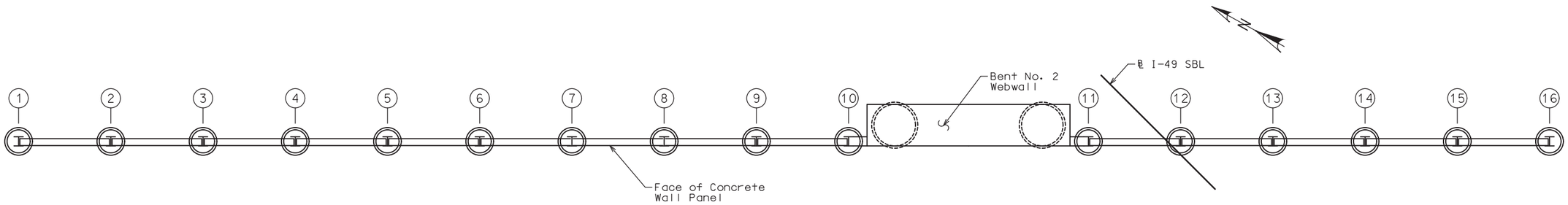

LEGEND

(4) - Drilled Shaft No.

PART PLAN SHOWING DRILLED SHAFT NUMBERING
FOR RECORDING AS-BUILT DRILLED SHAFT DATA

As-Built Drilled Shaft Data

Shaft No.	Top of Sound Rock (Elev.)	Tip of Casing (Elev.)	Bottom of Rock Socket (Elev.)	Remarks
North Retaining Wall				
1				
2				
3				
4				
5				
6				
7				
8				
9				
10				
11				
12				
13				
14				
15				
16				

Note:
Indicate remarks in remarks column:

This sheet to be completed by MoDOT construction personnel.

AS-BUILT DRILLED SHAFT DATA

Note: This drawing is not to scale. Follow dimensions.

Sheet No. 7 of 7

DESIGNED BY:	KLW	7/2020
DETAILED BY:	JTC	7/2020
CHECKED BY:	NSC	8/2020

STATE OF MISSOURI
KEITH LAWRENCE WETTER
NUMBER E-25019
REGISTERED PROFESSIONAL ENGINEER

THIS SHEET HAS BEEN SIGNED, SEALED AND DATED ELECTRONICALLY

DATE PREPARED 9/3/2020

ROUTE	STATE
I-49	MO
DISTRICT	SHEET NO.
BR	7

COUNTY VERNON

JOB NO. J7I3363

CONTRACT ID.

PROJECT NO.

BRIDGE NO. A9030

DATE	DESCRIPTION

MISSOURI HIGHWAYS AND TRANSPORTATION COMMISSION
105 WEST CAPITOL
JEFFERSON CITY, MO 65102
1-888-ASK-MODOT (1-888-275-6636)

LOCHNER
16105 W. 113th Street | Suite 107 | Lenexa, KS 66219
Certificate of Authority #F00727076

REV.

B_A9030_007_J7I3363_RETAINING WALL_AS-BUILT DATA_01.DGN 6:14:57 PM 9/2/2020

MISSOURI HIGHWAYS AND TRANSPORTATION COMMISSION

SEC/SUR 14 TWP 35N RGE 31W

BENCH MARKS - NAVD 1988 GEOID 12A

BM #1 - 8" SPIKE W/ CENTER DIVET
(CONTROL POINT #1) STA. 1000+78.99
OFFSET 0.34' RT, ℄ RTE I-49 ELEV. 923.46

BM #2 - 8" SPIKE W/ CENTER DIVET
(CONTROL POINT #2) STA. 1002+83.15
OFFSET 4.67' LT, ℄ RTE I-49 ELEV. 922.62

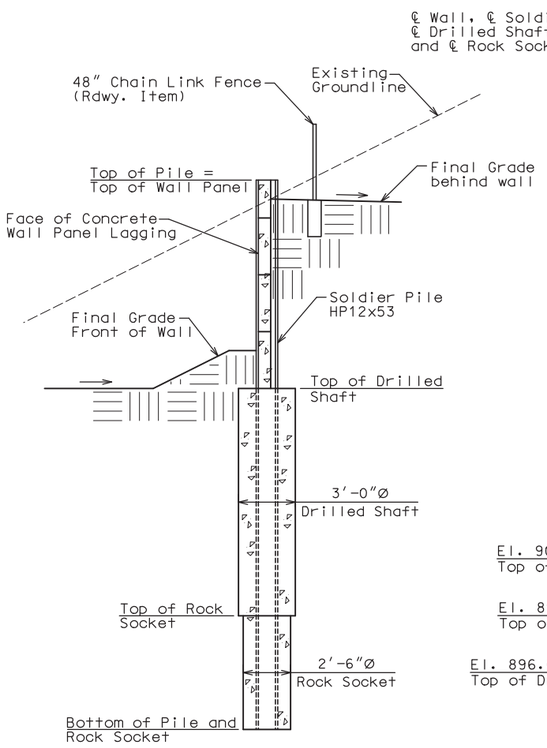

TYPICAL SECTION

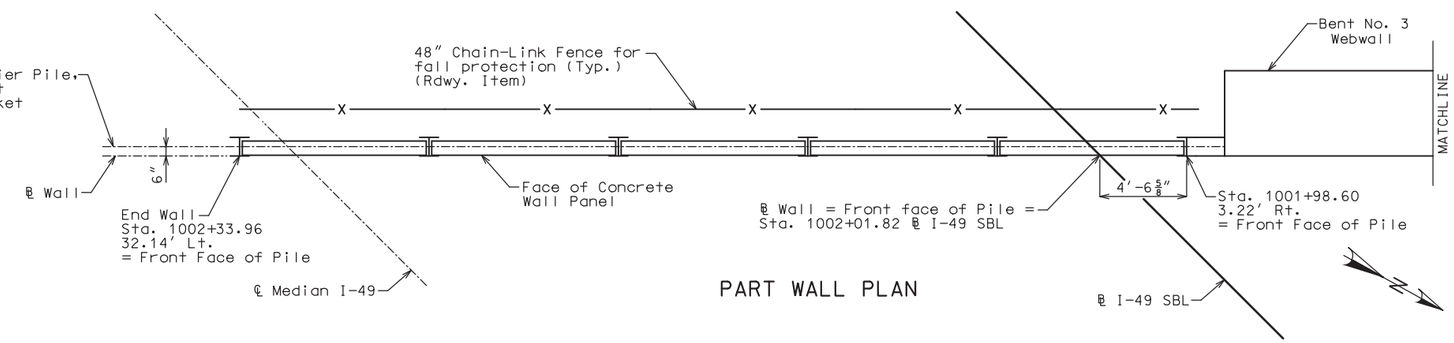

PART WALL PLAN

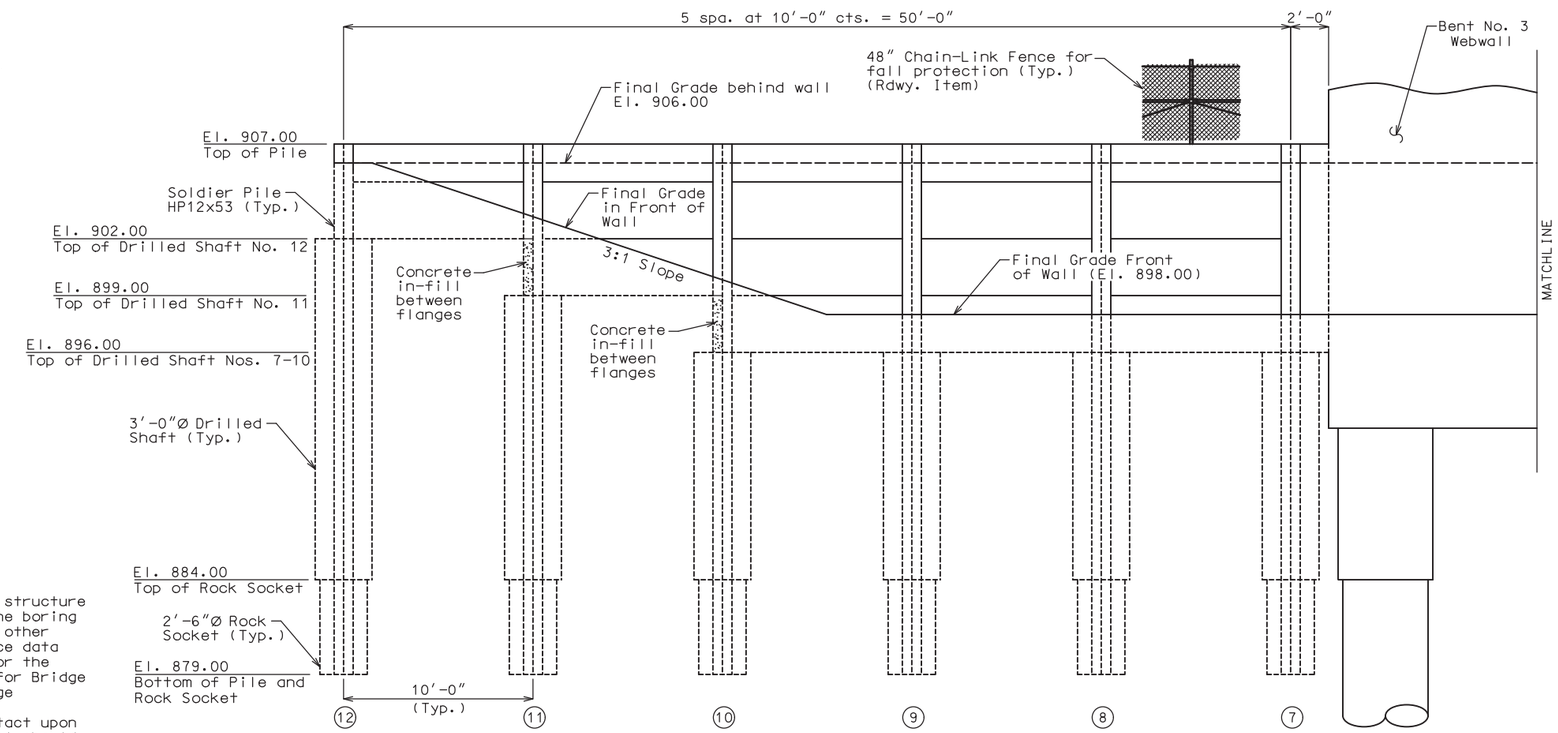

PART WALL ELEVATION

"◆" Indicates location of Borings

Notice and Disclaimer Regarding Boring Log Data

The locations of all subsurface borings for this structure are shown on the plan sheets for Bridge A8806. The boring data for all locations indicated, as well as any other boring logs or other factual records of subsurface data and investigations performed by the department for the design of the project, are shown on plan sheets for Bridge A8806 and may be included in the Electronic Bridge Deliverables.
They will also be available from the Project Contact upon written request. No greater significance or weight should be given to the boring data depicted on the plan sheets than is given to the subsurface data available from the district or elsewhere.

The Commission does not represent or warrant that any such boring data accurately depicts the conditions to be encountered in constructing this project. A contractor assumes all risks it may encounter in basing its bid prices, time or schedule of performance on the boring data depicted here or those available from the district, or on any other documentation not expressly warranted, which the contractor may obtain from the Commission.

Note:
See Missouri Standard Plans Drawing
607.10 for Chain Link Fence.

WALL A9031
SOUTH RETAINING WALL AT INTERMEDIATE BENT NO. 3
(SHEET 1 OF 2)

Note: This drawing is not to scale. Follow dimensions.

RETAINING WALL AT ROUTE I-49 SBL OVER MNA RAILROAD

STATE ROUTE I-49

ABOUT 4.5 MILES S.E. OF NEVADA

Sheet No. 1 of 7

DESIGNED BY:	KLW	6/2020
DETAILED BY:	JTC	6/2020
CHECKED BY:	NSC	8/2020

STD.	607.10
STD.	706.35

STATE OF MISSOURI
KEITH LAWRENCE WETTER
NUMBER E-25019
REGISTERED PROFESSIONAL ENGINEER

THIS SHEET HAS BEEN SIGNED, SEALED AND DATED ELECTRONICALLY

DATE PREPARED 9/3/2020

ROUTE	STATE
I-49	MO
DISTRICT	SHEET NO.
BR	1

COUNTY: VERNON

JOB NO. J7I3363

CONTRACT ID.

PROJECT NO.

BRIDGE NO. A9031

DESCRIPTION	DATE

MISSOURI HIGHWAYS AND TRANSPORTATION COMMISSION
105 WEST CAPITOL
JEFFERSON CITY, MO 65102
1-888-ASK-MODOT (1-888-275-6636)

LOCHNER
16105 W. 113th Street | Suite 107 | Lenexa, KS 66219
Certificate of Authority #F00727076

REV.

B_A9031_001_J7I3363_RETAINING WALL_BENT 3_01.dgn 6:15:23 PM 9/2/2020

0-19-02

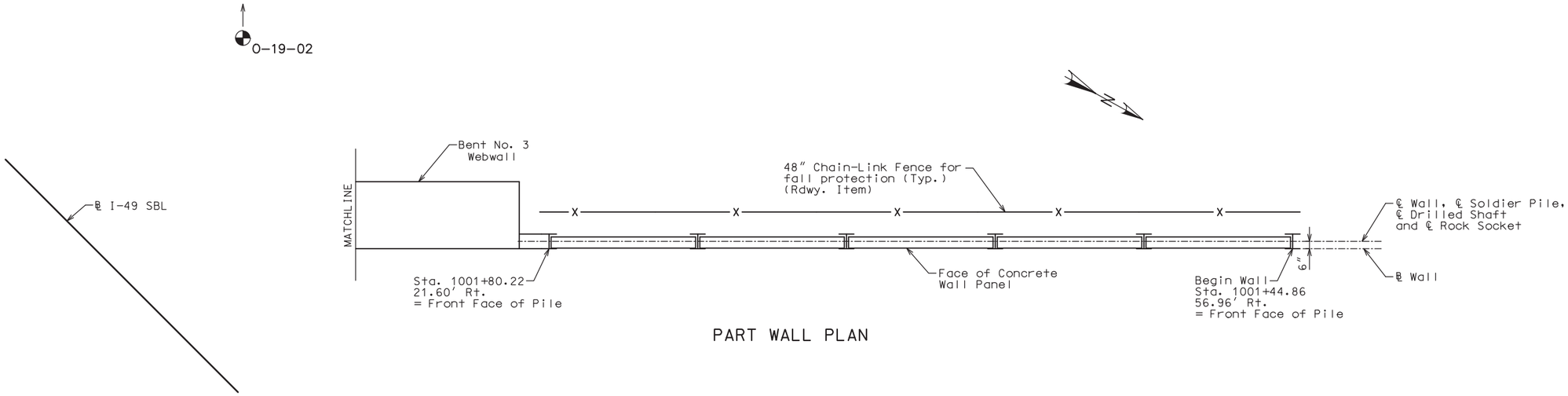

PART WALL PLAN

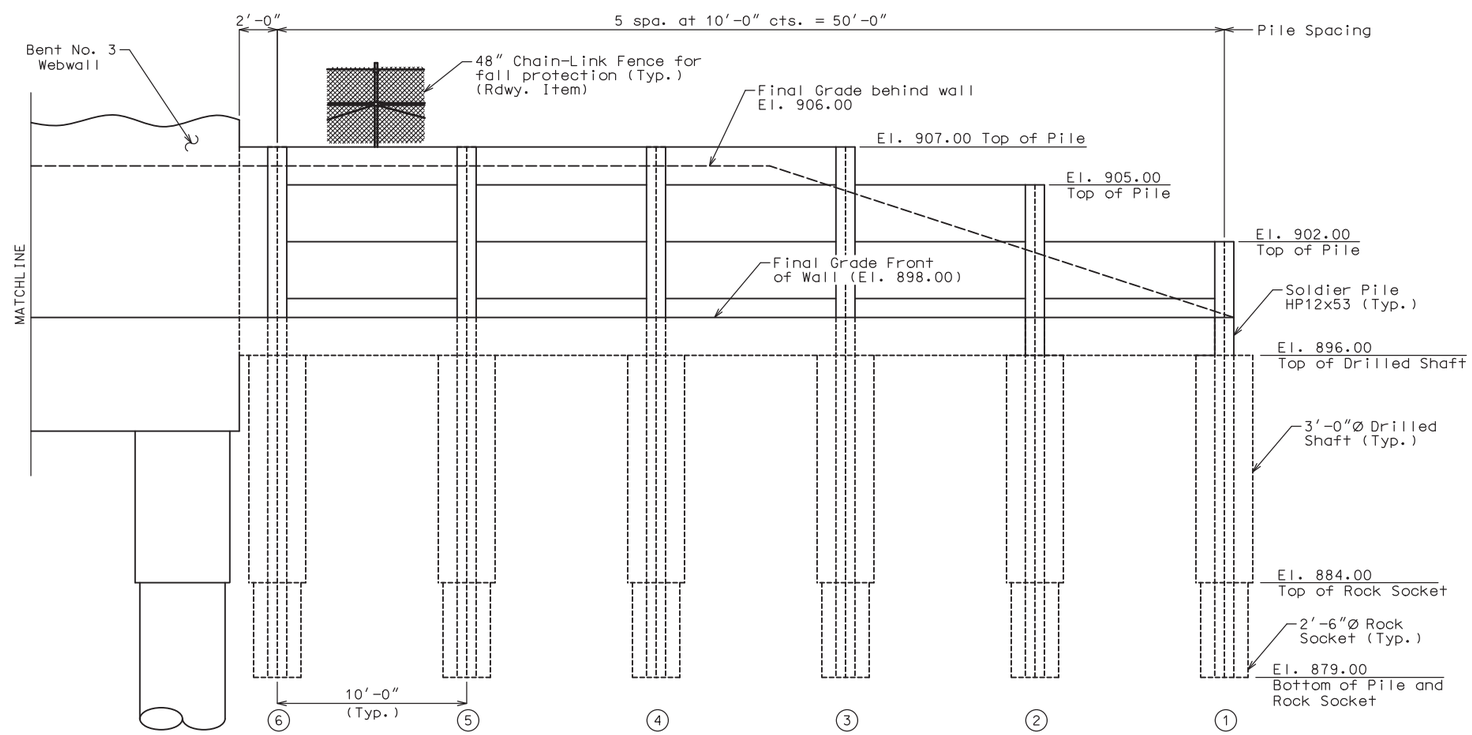

PART WALL ELEVATION

Note:
See Missouri Standard Plans Drawing
607.10 for Chain Link Fence.

WALL A9031
SOUTH RETAINING WALL AT INTERMEDIATE BENT NO. 3
(SHEET 2 OF 2)

DESIGNED BY:	KLW	6/2020
DETAILED BY:	JTC	6/2020
CHECKED BY:	NSC	8/2020

Note: This drawing is not to scale. Follow dimensions.

STATE OF MISSOURI
KEITH LAWRENCE WETTER
NUMBER E-25019
REGISTERED PROFESSIONAL ENGINEER

THIS SHEET HAS BEEN SIGNED, SEALED AND DATED ELECTRONICALLY

DATE PREPARED	
9/3/2020	
ROUTE	STATE
I-49	MO
DISTRICT	SHEET NO.
BR	2
COUNTY	
VERNON	
JOB NO.	
J7I3363	
CONTRACT ID.	
PROJECT NO.	
BRIDGE NO.	
A9031	

DESCRIPTION

DATE

MISSOURI HIGHWAYS AND TRANSPORTATION COMMISSION
105 WEST CAPITOL
JEFFERSON CITY, MO 65102
1-888-ASK-MODOT (1-888-275-6636)

LOCHNER
16105 W. 113th Street | Suite 107 | Lenexa, KS 66219
Certificate of Authority #F00727076

REV.

GENERAL NOTES:

Design Specifications:
2015 American Railway Engineering and Maintenance-of-Way Association (AREMA) Manual for Railway Engineering

Design Loading:
Structural Steel: AREMA Allowable Stress Design
Concrete: AREMA Load Factor Design
Earth 120 lb/cf.
Equivalent Fluid Pressure = 46.86 lb/cf
Ø = 26 degrees

Design Unit Stresses:

Class B-1 Concrete (Precast Panel Lagging)	f'c = 4,000 psi
Class B-2 Concrete (Drilled Shafts & Rock Sockets)	f'c = 4,000 psi
Reinforcing Steel (Grade 60)	fy = 60,000 psi
Structural Steel HP Pile (ASTM A709 Grade 50S)	fy = 50,000 psi fs = 27,500 psi

Joint Filler:
All joint filler shall be in accordance with Sec 1057 for preformed sponge rubber expansion and partition joint filler, except as noted.

Reinforcing Steel:
Minimum clearance to reinforcing steel shall be 1½", unless otherwise shown.

Traffic Handling:
Structure to be closed during construction. Traffic to be maintained on temporary bypass during construction. See roadway plans for traffic control.

Miscellaneous:
All concrete for the precast wall panels shall be Class B-1.

The wall shall be built vertical.

The contractor shall protect the galvanized surfaces of the soldier pile during installation and placement of backfill.

Retaining Wall Notes:
Retaining wall structures to be built in conjunction with Bridge A8806.

Groundline behind walls shall be graded (Rdwy Item) to near final elevation prior to drilling soldier pile foundations.

Construction of soldier pile foundations adjacent to intermediate bents shall be constructed in a manner that is compatible with the Intermediate Bent foundation construction.

Placement of Rock Blanket (Rdwy Item) and use of heavy construction equipment behind wall (within 10 feet) shall be completed prior to excavation in front of wall.

Concrete closure pour between Intermediate Bents and adjacent soldier pile shall be constructed with Class B-1 Concrete.

Construct a concrete in-fill to support the end of upper panels at pile 10 and 11. An alternate method of panel support may be proposed by the Contractor as approved by the Engineer.

Use precast concrete lagging installed between flanges of steel soldier pile.

Use typical 10'-0" soldier pile spacing.

Steel soldier pile shall be founded in unreinforced drilled shafts and rock sockets.

Backfill in drilled pile holes above top of drilled shaft elevation shall be backfilled with low strength, excavatable flowable fill.

Excavation in front of wall (Rdwy Item) and precast panel installation shall not commence until the concrete in the shafts has reached 3,000 psi compressive strength, but no sooner than 14 days after concrete placement.

Construction clearance to existing CL MNA track shall be 15'-0" minimum.

Fall protection fencing shall be 48" chain link fence (Std. 607.10) (Rdwy. Item)

Union Pacific Railroad
Overhead Structure Construction Notes

1. The proposed grade separation project shall not increase the quantity and/or characteristics of the flow in the Railroad's ditches and/or drainage structures.
2. The elevation of the existing top-of-rail profile shall be verified before beginning construction. All discrepancies shall be brought to the attention of the Railroad prior to construction.
3. The contractor must submit a proposed method of erosion and sediment control and have the method approved by the Railroad.
4. All shoring systems that impact the Railroad's operation and/or supports the Railroad's embankment shall be designed and constructed per current Railroad Guidelines for Temporary Shoring.
5. All demolitions within the Railroad's right-of-way and/or demolition that may impact the Railroad's tracks or operations shall be in compliance with the Railroad's Demolition Guidelines.
6. Erection over the Railroad's right-of-way shall be designed to cause no interruption to the Railroad's operation, enabling the track(s) to remain open to traffic per the Railroad's requirements.
7. Railroad requirements do not allow work within 50 feet of track centerline when a train passes the work site and all personnel must clear the area within 25 feet of the track centerline and secure all equipment.
8. False-work clearances shall comply with minimum construction clearances.
9. All permanent clearances shall be verified before project closing.

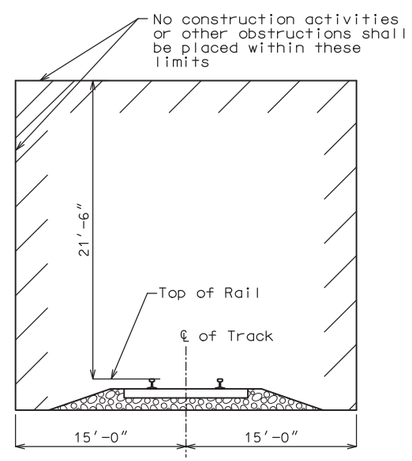

MINIMUM CONSTRUCTION CLEARANCE ENVELOPE
(Normal to Railroad)

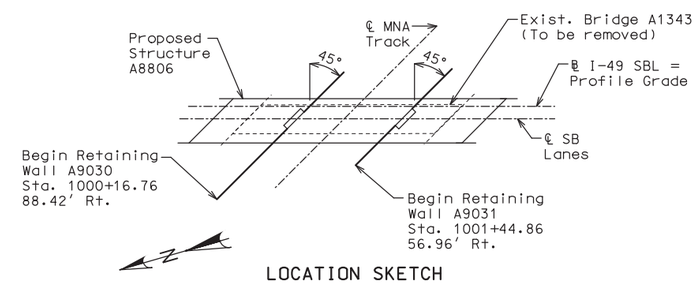

LOCATION SKETCH

DESIGNED BY:	KLW	6/2020
DETAILED BY:	JTC	6/2020
CHECKED BY:	NSC	8/2020

Note: This drawing is not to scale. Follow dimensions.

GENERAL NOTES

STATE OF MISSOURI
KEITH LAWRENCE WETTER
NUMBER E-25019
REGISTERED PROFESSIONAL ENGINEER

THIS SHEET HAS BEEN SIGNED, SEALED AND DATED ELECTRONICALLY

DATE PREPARED 9/3/2020

ROUTE	STATE
I-49	MO
DISTRICT	SHEET NO.
BR	3

COUNTY: VERNON
JOB NO.: J7I3363
CONTRACT ID.:
PROJECT NO.:
BRIDGE NO.: A9031

DATE	DESCRIPTION

MISSOURI HIGHWAYS AND TRANSPORTATION COMMISSION
105 WEST CAPITOL
JEFFERSON CITY, MO 65102
1-888-ASK-MODOT (1-888-275-6636)

LOCHNER
16105 W. 113th Street | Suite 107 | Lenexa, KS 66219
Certificate of Authority #F00727076

REV.

Foundation Data

Type	Design Data		South Retaining Wall
Soldier Pile	Pile Type and Size		HP 12x53
	Number	ea.	12
	Length per Each	ft.	✳
	Min. Galvanized Penetration (Elev.)	ft.	Full Length
Rock Socket	Number	ea.	12
	Foundation Material		Strong Rock
	Elevation Range	ft.	880-844
	Resistance Factor (Tip Resistance)		0.49
	Design End Bearing Minimum Nominal Axial Compressive Resistance (Tip Resistance)	ksf	29

✳ See Typical Wall Details sheet or Wall Elevation sheets for Pile Lengths.

Additional Notes:
Pile:
The pile shall be placed in the center of the drilled shaft and shall not be driven.

In order to prevent cave-in, the drill hole above the top of concrete drilled shaft shall be temporarily filled with sand or low strength flowable fill material that can be excavated during concrete lagging panel installation.

Rock Socket (Drilled Shafts):

The use of temporary casing is anticipated.

Minimum Nominal Axial Compressive Resistance (Tip Resistance) = Maximum Factored Loads/Resistance Factors

Foundation Inspection Holes and Video Camera Inspection shall be performed on drilled shafts and rock sockets at the discretion of the Engineer.

Estimated Quantities

Item		Quantity
Drilled Shafts (3 ft. 0 in. Dia.)	L.F.	153.0
Rock Sockets (2 ft. 6 in. Dia.)	L.F.	60.0
Video Camera Inspection	EACH	4
Foundation Inspection Holes	L.F.	60.0
Galvanized Structural Steel Piles (12 in.)	L.F.	329
Precast Concrete Wall Panels	S.F.	909

Estimated Quantities for Precast Concrete Wall Panels

Item		Quantity
Class B-1 Concrete	C.Y.	27.0
Reinforcing Steel (Retaining Walls)	POUND	4,760

The table of Estimated Quantities for Precast Concrete Wall Panels represents the quantities used by the State in preparing the cost estimate for the wall. The area of the precast-concrete wall panels used for lagging will be measured to the nearest square foot from the neatlines of the precast panels dimensioned in the plans. Payment for reinforced precast concrete panels, closure pours, concrete in-fill supports and reinforcing steel will be considered completely covered by the contract unit price for the panels. Variations may be encountered in the estimated quantities but the variations cannot be used for an adjustment in the contract unit price.

STATE OF MISSOURI
KEITH LAWRENCE WETTER
NUMBER E-25019
REGISTERED PROFESSIONAL ENGINEER

THIS SHEET HAS BEEN SIGNED, SEALED AND DATED ELECTRONICALLY

DATE PREPARED 9/3/2020

ROUTE	STATE
I-49	MO
DISTRICT	SHEET NO.
BR	4

COUNTY VERNON
JOB NO. J7I3363
CONTRACT ID.
PROJECT NO.
BRIDGE NO. A9031

DATE	DESCRIPTION

MISSOURI HIGHWAYS AND TRANSPORTATION COMMISSION
105 WEST CAPITOL
JEFFERSON CITY, MO 65102
1-888-ASK-MODOT (1-888-275-6636)

LOCHNER
16105 W. 113th Street | Suite 107 | Lenexa, KS 66219
Certificate of Authority #F00727076

DESIGNED BY:	KLW	7/2020
DETAILED BY:	JTC	8/2020
CHECKED BY:	NSC	8/2020

QUANTITIES AND FOUNDATION DATA

Note: This drawing is not to scale. Follow dimensions.

REV.

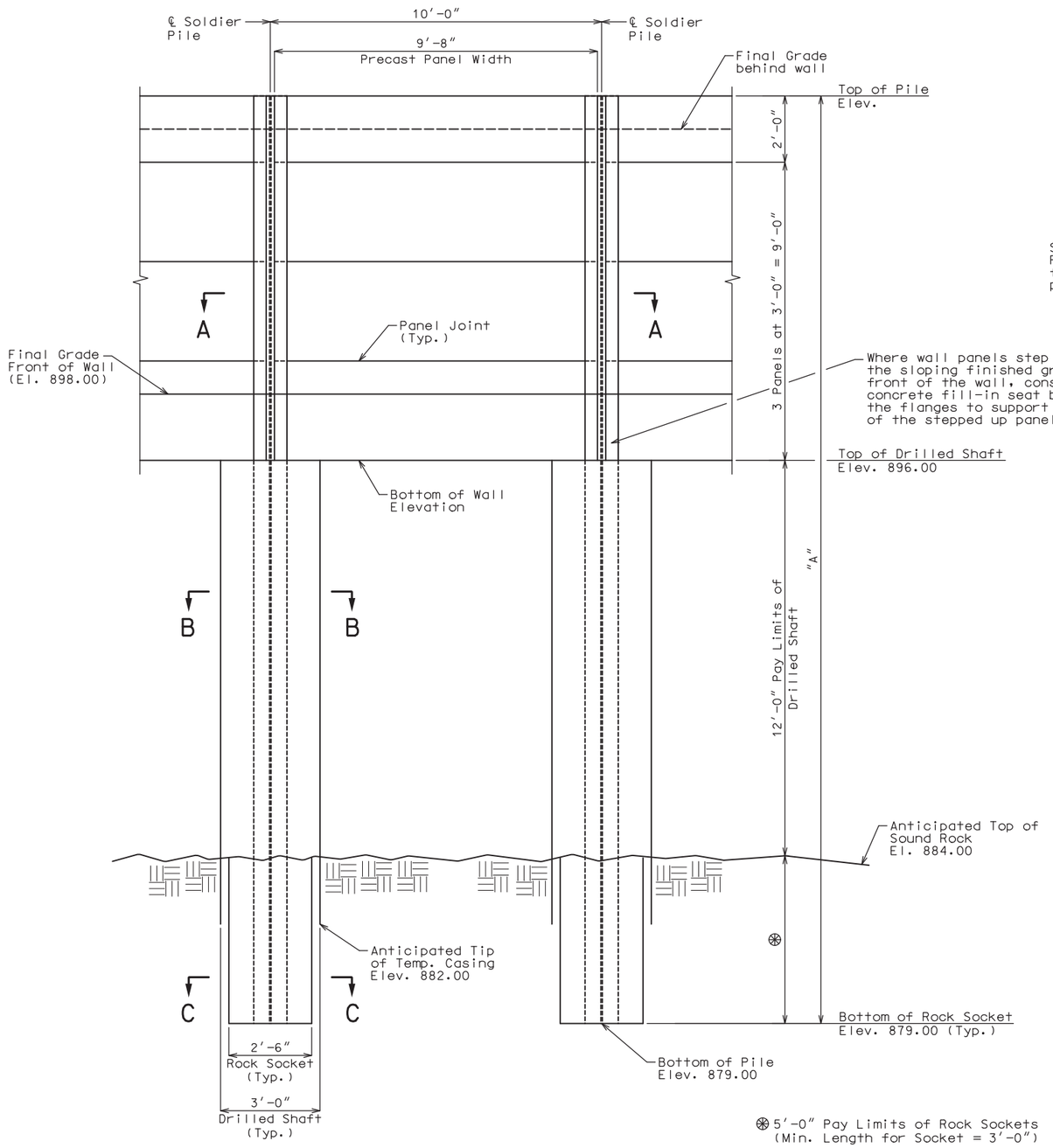

TYPICAL PART WALL ELEVATION

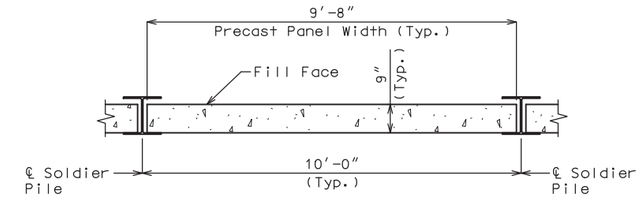

SECTION A-A

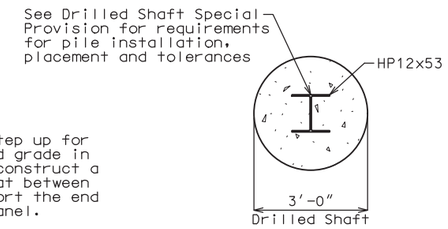

SECTION B-B

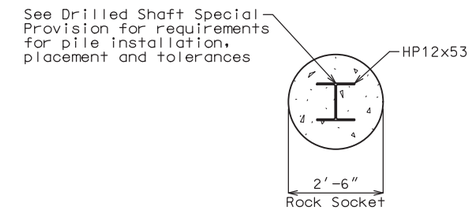

SECTION C-C

South Wall Pile Information Table		
Pile	Top of Pile Elev.	Length of Pile, A (ft)
1	902.00	23
2	905.00	26
3	907.00	28
4	907.00	28
5	907.00	28
6	907.00	28
7	907.00	28
8	907.00	28
9	907.00	28
10	907.00	28
11	907.00	28
12	907.00	28

Notes:
Top of Sound Rock Elevation may vary, however minimum length of Rock Socket shall be 3′-0″.

For layout of precast panels, see Sheet Nos. 1 and 2.

For details of precast panels, see Sheet No. 6.

TYPICAL WALL DETAILS

DESIGNED BY:	KLW	7/2020
DETAILED BY:	JTC	7/2020
CHECKED BY:	NSC	8/2020

Note: This drawing is not to scale. Follow dimensions.

STATE OF MISSOURI
KEITH LAWRENCE WETTER
NUMBER E-25019
REGISTERED PROFESSIONAL ENGINEER

THIS SHEET HAS BEEN SIGNED, SEALED AND DATED ELECTRONICALLY

DATE PREPARED 9/3/2020

ROUTE	STATE
I-49	MO
DISTRICT	SHEET NO.
BR	5

COUNTY VERNON

JOB NO. J7I3363

CONTRACT ID.

PROJECT NO.

BRIDGE NO. A9031

DESCRIPTION | DATE

MISSOURI HIGHWAYS AND TRANSPORTATION COMMISSION
105 WEST CAPITOL
JEFFERSON CITY, MO 65102
1-888-ASK-MODOT (1-888-275-6636)

LOCHNER
16105 W. 113th Street | Suite 107 | Lenexa, KS 66219
Certificate of Authority #F00727076

REV.

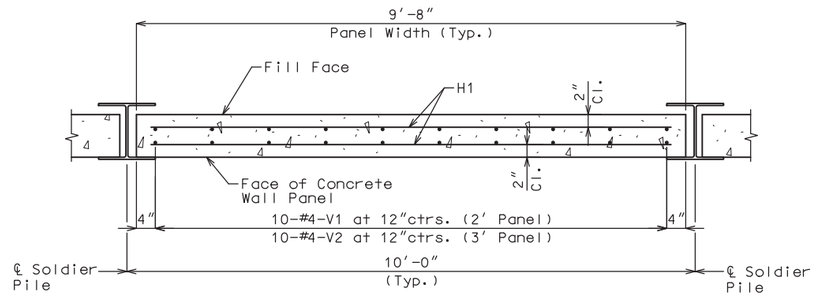

TYPICAL LAGGING PANEL PLAN

Notes:

For panel locations, see Sheet Nos. 1 and 2.

Fabricator shall be responsible for location and design of all lifting devices.

All concrete for the precast wall panel and closure pours shall be Class B-1.

Payment for all concrete and reinforcement, joint material, complete in place (Including that of the closure pours and concrete in-fills for panel support) will be considered completely covered by the contract unit price for Precast Concrete Wall Panels per square foot.

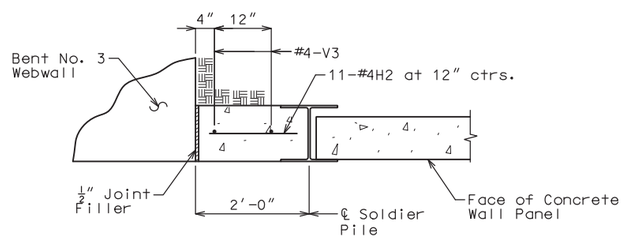

TYPICAL CLOSURE POUR DETAIL

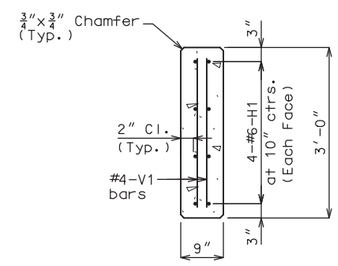

3′ PANEL

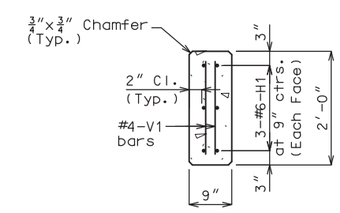

2′ PANEL

BILL OF REINFORCING STEEL - EACH CLOSURE POUR					
NO.	SIZE & MARK	NOMINAL LENGTH	ACTUAL LENGTH	SHAPE	BENDING DIAGRAM
2	4 V3	10′-6″	10′-6″	20	B
11	4 H2	20″	20″	20	SHAPE 20

Notes:

The following information only quantities are for each closure pour:

Total number of closures = 2
Volume of concrete per closure = 0.82 cu. yds.
Weight of reinforcement per closure = 26 lbs.

BILL OF REINFORCING STEEL - EACH 3′ PANEL					
NO.	SIZE & MARK	NOMINAL LENGTH	ACTUAL LENGTH	SHAPE	BENDING DIAGRAM
20	4 V2	2′-8″	2′-8″	20	B
8	6 H1	9′-4″	9′-4″	20	SHAPE 20

Notes:

The following information only quantities are for each 3′ tall panel:

Total number of panels = 26
Volume of concrete per panel = 0.81 cu. yds.
Weight of reinforcement per panel = 148 lbs.

BILL OF REINFORCING STEEL - EACH 2′ PANEL					
NO.	SIZE & MARK	NOMINAL LENGTH	ACTUAL LENGTH	SHAPE	BENDING DIAGRAM
20	4 V1	20″	20″	20	B
6	6 H1	9′-4″	9′-4″	20	SHAPE 20

Notes:

The following information only quantities are for each 2′ tall panel:

Total number of panels = 8
Volume of concrete per panel = 0.54 cu. yds.
Weight of reinforcement per panel = 107 lbs.

PRECAST CONCRETE LAGGING PANEL DETAILS

DESIGNED BY:	KLW	7/2020
DETAILED BY:	JTC	7/2020
CHECKED BY:	NSC	8/2020

Note: This drawing is not to scale. Follow dimensions.

STATE OF MISSOURI
KEITH LAWRENCE WETTER
NUMBER E-25019
REGISTERED PROFESSIONAL ENGINEER

THIS SHEET HAS BEEN SIGNED, SEALED AND DATED ELECTRONICALLY

DATE PREPARED 9/3/2020

ROUTE	STATE
I-49	MO
DISTRICT	SHEET NO.
BR	6

COUNTY VERNON
JOB NO. J7I3363
CONTRACT ID.
PROJECT NO.
BRIDGE NO. A9031

DATE	DESCRIPTION

MISSOURI HIGHWAYS AND TRANSPORTATION COMMISSION
105 WEST CAPITOL
JEFFERSON CITY, MO 65102
1-888-ASK-MODOT (1-888-275-6636)

LOCHNER
16105 W. 113th Street | Suite 107 | Lenexa, KS 66219
Certificate of Authority #F00727076

REV.

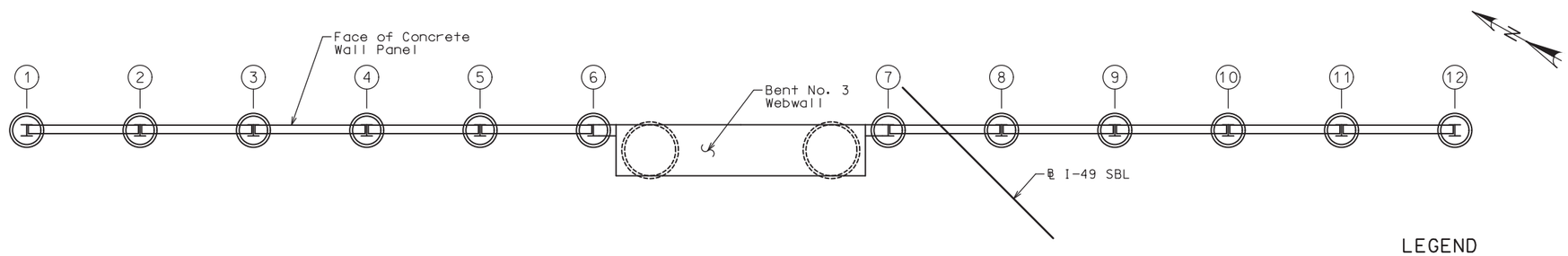

LEGEND

(4) - Drilled Shaft No.

PART PLAN SHOWING DRILLED SHAFT NUMBERING
FOR RECORDING AS-BUILT DRILLED SHAFT DATA

As-Built Drilled Shaft Data

Shaft No.	Top of Sound Rock (Elev.)	Tip of Casing (Elev.)	Bottom of Rock Socket (Elev.)	Remarks
South Retaining Wall				
1				
2				
3				
4				
5				
6				
7				
8				
9				
10				
11				
12				

Note:
Indicate remarks in remarks column:

This sheet to be completed by MoDOT construction personnel.

AS-BUILT DRILLED SHAFT DATA

Note: This drawing is not to scale. Follow dimensions.

Sheet No. 7 of 7

DESIGNED BY:	KLW	7/2020
DETAILED BY:	JTC	7/2020
CHECKED BY:	NSC	8/2020

STATE OF MISSOURI
KEITH LAWRENCE WETTER
NUMBER E-25019
REGISTERED PROFESSIONAL ENGINEER

THIS SHEET HAS BEEN SIGNED, SEALED AND DATED ELECTRONICALLY

DATE PREPARED 9/3/2020

ROUTE	STATE
I-49	MO
DISTRICT	SHEET NO.
BR	7

COUNTY VERNON

JOB NO. J7I3363

CONTRACT ID.

PROJECT NO.

BRIDGE NO. A9031

DATE	DESCRIPTION

MISSOURI HIGHWAYS AND TRANSPORTATION COMMISSION
105 WEST CAPITOL
JEFFERSON CITY, MO 65102
1-888-ASK-MODOT (1-888-275-6636)

LOCHNER
16105 W. 113th Street | Suite 107 | Lenexa, KS 66219
Certificate of Authority #F00727076

REV.

B_A9031_007_J7I3363_RETAINING WALL_AS-BUILT DATA_01.DGN 6:17:24 PM 9/2/2020