MISSOURI HIGHWAYS AND TRANSPORTATION COMMISSION
PLANS FOR PROPOSED
STATE HIGHWAY

MERCER COUNTY

DESIGN DESIGNATION

A.A.D.T. - 2022 = 148
A.A.D.T. - 2042 = 164
D.H.V. = 14%
T = 10%
V = 55 M.P.H.
D = 54%

FUNCTIONAL CLASSIFICATION - MINOR COLLECTOR

PERMANENT DRAINAGE EASEMENT

CONVENTIONAL SYMBOLS
(USED IN PLANS)

	EXISTING	NEW
BUILDINGS AND STRUCTURES		
GUARD RAIL		
GUARD CABLE		
CONCRETE RIGHT-OF-WAY MARKER		
STEEL RIGHT-OF-WAY MARKER		
LOCATION SURVEY MARKER		
UTILITIES		
FIBER OPTICS	-FO-	~~FO~~
OVERHEAD CABLE TV	-OTV-	~~OTV~~
UNDERGROUND CABLE TV	-UTV-	~~UTV~~
OVERHEAD TELEPHONE	-OT-	~~OT~~
UNDERGROUND TELEPHONE	-UT-	~~UT~~
OVERHEAD POWER	-OE-	~~OE~~
UNDERGROUND POWER	-UE-	~~UE~~
SANITARY SEWER	-S-	~~S~~
STORM SEWER	-SS-	~~SS~~
GAS	-G-	~~G~~
WATER	-W-	~~W~~
MANHOLE	SAN	
FIRE HYDRANT	HYD	
WATER VALVE	WV	
WATER METER	WM	
DROP INLET	DI	
DITCH BLOCK		
GROUND MOUNTED SIGN	SIGN	
LIGHT POLE		
H-FRAME POWER POLE		
TELEPHONE PEDESTAL	PED	
FENCE		
CHAIN LINK	-V-	
WOVEN WIRE	-X-	
GATE POST		
BENCHMARK	BM	

NOTE: DASHED OR OPEN SYMBOLS INDICATE EXISTING FEATURES

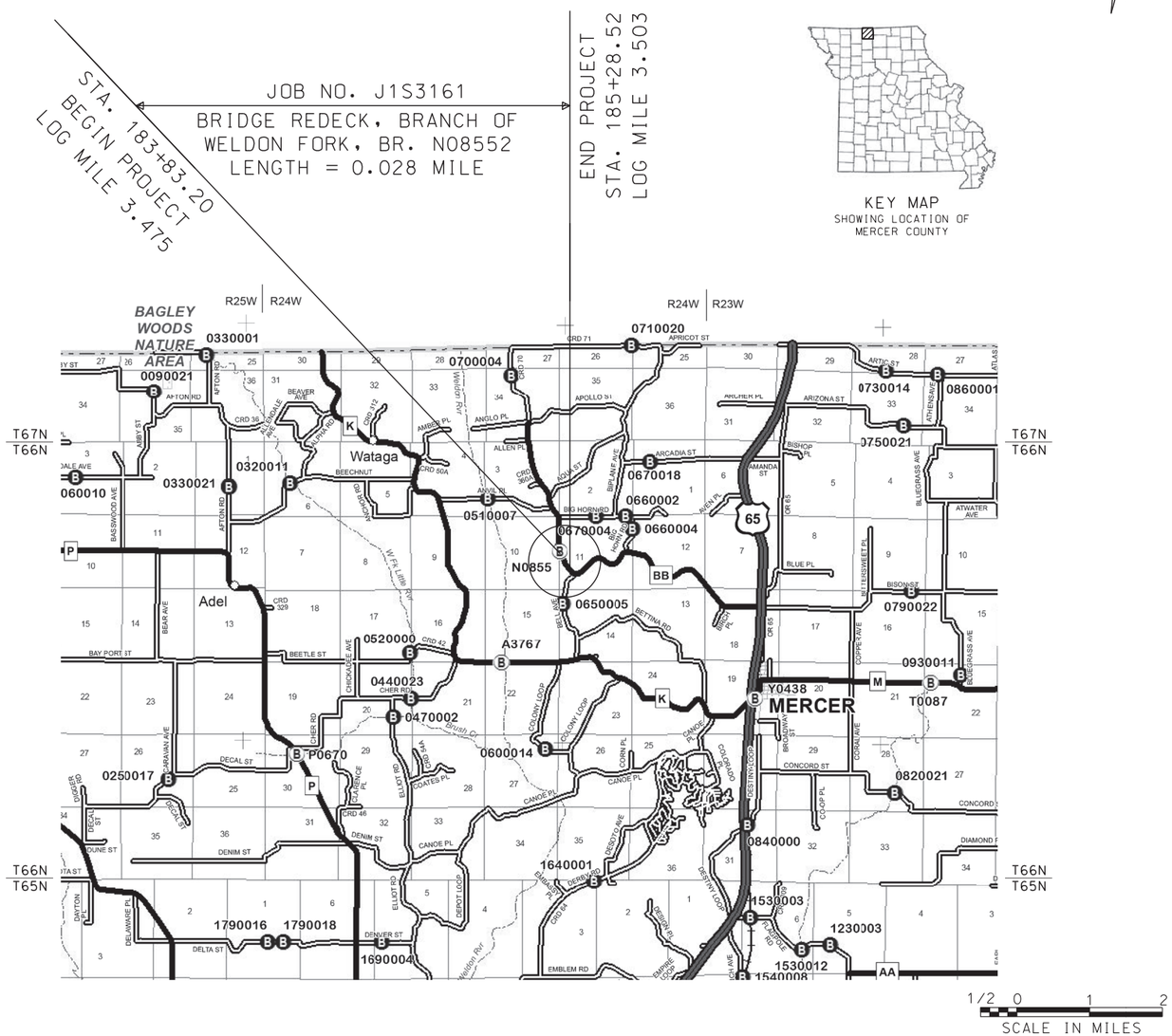

THE EXISTENCE AND APPROXIMATE LOCATION OF UTILITY FACILITIES KNOWN TO EXIST, AS SHOWN ON THE PLANS, ARE BASED ON THE BEST INFORMATION AVAILABLE TO THE COMMISSION AT THIS TIME. THIS INFORMATION IS PROVIDED BY THE COMMISSION "AS IS" AND THE COMMISSION EXPRESSLY DISCLAIMS ANY REPRESENTATION OR WARRANTY AS TO THE COMPLETENESS, ACCURACY, OR SUITABILITY OF THE INFORMATION FOR ANY USE. RELIANCE UPON THIS INFORMATION IS DONE AT THE RISK AND PERIL OF THE USER, AND THE COMMISSION SHALL NOT BE LIABLE FOR ANY DAMAGES THAT MAY ARISE FROM ANY ERROR IN THE INFORMATION. IT IS, THEREFORE, THE RESPONSIBILITY OF THE CONTRACTOR TO VERIFY THE EXISTENCE, LOCATION AND STATUS OF ANY FACILITY. SUCH VERIFICATION INCLUDES DIRECT CONTACT WITH THE LISTED UTILITIES.

INDEX OF SHEETS

DESCRIPTION	SHEET NUMBER
TITLE SHEET	1
TYPICAL SECTIONS (TS) (1 SHEET)	2
QUANTITY SHEETS (QU) (2 SHEETS)	3
PLAN-PROFILE (PP)	4
TRAFFIC CONTROL SHEETS (TC)	5-6
SIGNING (SN)	7
EROSION CONTROL SHEETS (EC)	8-11
BRIDGE DRAWINGS (B)	
N08552	1-6

LENGTH OF PROJECT

BEGINNING OF PROJECT	STA. 183+83.20	
END OF PROJECT	STA. 185+28.52	
APPARENT LENGTH	145.32	FEET
EQUATIONS AND EXCEPTIONS:		
TOTAL CORRECTIONS	0.00	FEET
NET LENGTH OF PROJECT	145.32	FEET
STATE LENGTH	0.028	MILE
FOR INFORMATION ONLY ESTIMATED DISTURBED ACRES	0.3	ACRES

STATE OF MISSOURI
WESLEY A. O'NEAL
NUMBER PE-2018021231
PROFESSIONAL ENGINEER
THIS SHEET HAS BEEN SIGNED, SEALED AND DATED ELECTRONICALLY.

DATE PREPARED: 7/6/2020

ROUTE	STATE
BB	MO
DISTRICT	SHEET NO.
NW	1

COUNTY: MERCER
JOB NO.: J1S3161
CONTRACT ID.:
PROJECT NO.:
BRIDGE NO.:

DATE	DESCRIPTION

IF A SEAL IS PRESENT ON THIS SHEET IT HAS BEEN ELECTRONICALLY SEALED AND DATED.

MISSOURI HIGHWAYS AND TRANSPORTATION COMMISSION
MoDOT
105 WEST CAPITOL
JEFFERSON CITY, MO 65102
1-888-ASK-MODOT (1-888-275-6636)

WILSON & COMPANY
ENGINEERS & ARCHITECTS
800 E 101st Terr., Ste. 200
Kansas City, MO 64131
Phone (816) 701-3100
Fax (816) 942-3013
Missouri Cert. of Authority #2003007599

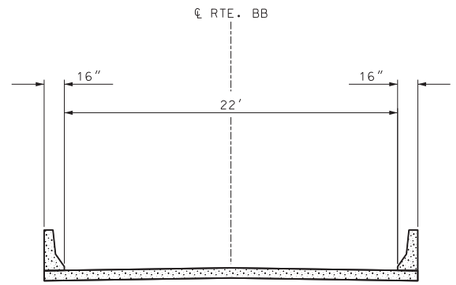

TYPICAL SECTION ON BRIDGE - RTE. BB
STA. 184+03.20 TO STA. 185+08.52

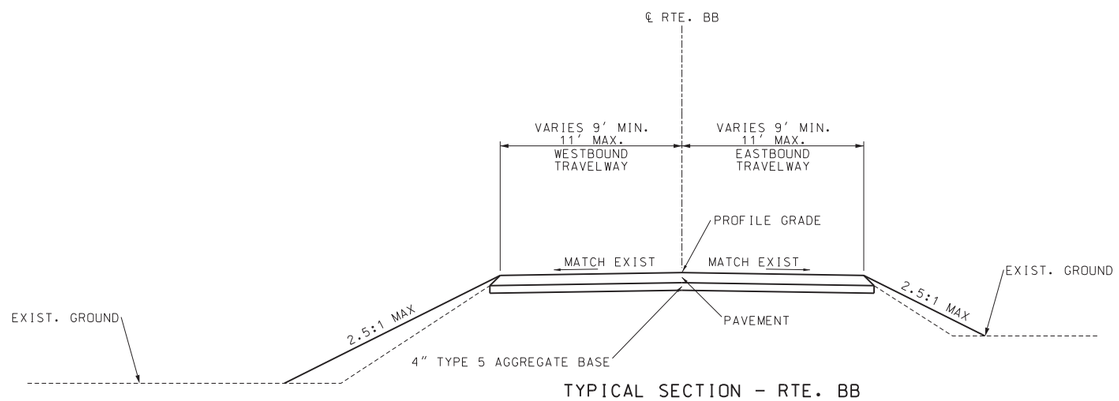

TYPICAL SECTION - RTE. BB
STA. 183+83.20 TO STA. 184+03.20
STA. 185+08.52 TO STA. 185+28.52

PAVEMENT - HMA DESIGN

12″ BITUMINOUS PAVEMENT

1.75″ BP-1 W/PG 64-22
10.25″ BITUMINOUS BASE W/PG 64-22

ESTIMATE FACTORS:
FOR INFORMATION PURPOSES ONLY

BITUMINOUS PAVEMENT MIXTURE PG64-22 (BP-1) - 1.98 TONS/CUYD
BITUMINOUS PAVEMENT MIXTURE PG64-22 (BASE) - 1.98 TONS/CUYD
TACK COAT - 0.05 GAL/SQYD
4″ TYPE 5 AGGREGATE - 0.22 TONS/SQYD COMPACTED

NOT TO SCALE

TYPICAL SECTIONS
SHEET 1 OF 1

STATE OF MISSOURI
WESLEY A O'NEAL
NUMBER PE-2018021231
PROFESSIONAL ENGINEER
"THIS SHEET HAS BEEN SIGNED, SEALED AND DATED ELECTRONICALLY.

DATE PREPARED
6/30/2020

ROUTE	STATE
BB	MO
DISTRICT	SHEET NO.
NW	2

COUNTY
MERCER

JOB NO.
J1S3161

CONTRACT ID.

PROJECT NO.
.

BRIDGE NO.
.

DESCRIPTION	DATE
.	.
.	.
.	.
.	.
.	.
.	.
.	.

MISSOURI HIGHWAYS AND TRANSPORTATION COMMISSION
105 WEST CAPITOL
JEFFERSON CITY, MO 65102
1-888-ASK-MODOT (1-888-275-6636)

IF A SEAL IS PRESENT ON THIS SHEET IT HAS BEEN ELECTRONICALLY SEALED AND DATED.

WILSON & COMPANY
ENGINEERS & ARCHITECTS
800 E 101st Terr., Ste. 200
Kansas City, MO 64131
Phone (816) 701-3100
Fax (816) 942-3013
Missouri Cert. of Authority #2003007599

REMOVAL OF IMPROVEMENTS

STA.	STA.	LOCATION	ITEM	UNITS	QUANTITY	REMARKS
VARIES		RTE. BB	SIGN	EA	14	2 WEIGHT LIMIT SIGNS AND 12 OBJECT MARKERS
183+83.20		RTE. BB	SAW CUT	FT	18	
183+83.20	184+03.20	RTE. BB	PAVEMENT	SY	12.7	REMOVAL OF EXISTING PAVEMENT
185+08.52	185+28.52	RTE. BB	PAVEMENT	SY	12.9	REMOVAL OF EXISTING PAVEMENT
185+28.52		RTE. BB	SAW CUT	FT	17	
				TOTAL	1 LUMP SUM	

CONTRACTOR FURNISHED SURVEYING AND STAKING

TOTAL = 1 LUMP SUM

MOBILIZATION

TOTAL = 1 LUMP SUM

BITUMINOUS PAVEMENT

STA.	STA.	LOCATION	WIDTH(FT)	1.75" BP-1 (PG 64-22) (TONS)	10.25" BASE (PG 64-22) (TONS)	4" TYPE 5 AGGR. BASE (SY)
183+83.20	184+03.20	RTE. BB	VARIES	4.21	25.74	47.9
185+08.52	185+28.52	RTE. BB	VARIES	4.21	25.74	47.9
			TOTALS	8.42	51.48	95.8
			PAY TOTALS	8.4	51.5	96

LINEAR GRADING, CLASS 2

STA.	STA.	LOCATION	QUANTITY (STA)
183+83.20	184+03.20	RTE. BB - LT	0.2
185+08.52	185+28.52	RTE. BB - RT	0.2
		RTE. BB - LT	0.2
		RTE. BB - RT	0.2
		TOTALS	0.8
		PAY TOTAL	0.8

PERMANENT EROSION CONTROL

STA.	STA.	LOCATION	FURNISHING TYPE 2 ROCK BLANKET (CY)	PLACING TYPE 2 ROCK BLANKET (CY)	PERMANENT EROSION CONTROL GEOTEXTILE (SY)	REMARKS
183+63.94	184+43.96	RTE. BB	357.3	357.3	178.7	SOUTH BANK
184+61.51	185+14.07	RTE. BB	236.8	236.8	118.4	NORTH BANK
183+91.07	184+13.36	RTE. BB - RT	95.5	95.5		UNIT 1
183+83.00	184+03.53	RTE. BB - RT	85.4	85.4		UNIT 2
183+82.97	184+07.62	RTE. BB - RT	94.9	94.9		UNIT 3
183+95.40	184+24.69	RTE. BB - RT	107.4	107.4		UNIT 4
184+38.64	184+54.32	RTE. BB - RT	81.8	81.8		UNIT 5
		TOTALS	1059.1	1059.1	297.1	
		PAY TOTALS	1059	1059	297	

TEMPORARY EROSION CONTROL

STA.	STA.	LOCATION	SIDE	SILT FENCE (LF)	TYPE C BERM (LF)	ROCK DITCH CHECK (LF)	SEDIMENT REMOVAL (CY)	REMARKS
183+83.20	184+03.20	RTE. BB	LT	20			1	
183+83.20	184+03.20	RTE. BB	RT	20			1	
	183+90.00	RTE. BB	RT			9	1	
	184+42.50	RTE. BB			153			MEASURED ALONG THE TOE OF THE CHANNEL
	184+71.10	RTE. BB			75			MEASURED ALONG THE TOE OF THE CHANNEL
	185+00.00	RTE. BB	RT			24	1	
185+08.52	185+28.52	RTE. BB	RT	20			1	
185+08.52	185+28.52	RTE. BB	LT	20			1	
183+73.65	184+37.48	RTE. BB	RT	310			4	ALONG TOE OF SOUTH BANK WITH ROCK WEIRS
		TOTALS		310	228	33	10	
		PAY TOTALS		310	228	33	10	

SEEDING - COOL SEASON MIXTURE

STA.	STA.	LOCATION	SEEDING AC.	REMARKS
183+53.09	184+30.48	RTE. BB - RT	0.18	CHANNEL ACCESS AREA
183+83.20	185+28.52	RTE. BB	0.04	ROADWAY SIDE SLOPES
		TOTAL	0.22	
		PAY TOTAL	1.0	

SUMMARY OF QUANTITIES
SHEET 1 OF 2

STATE OF MISSOURI
WESLEY A O'NEAL
NUMBER PE-2018021231
PROFESSIONAL ENGINEER
"THIS SHEET HAS BEEN SIGNED, SEALED AND DATED ELECTRONICALLY.

DATE PREPARED 6/30/2020

ROUTE	STATE
BB	MO
DISTRICT	SHEET NO.
NW	3

COUNTY MERCER

JOB NO. J1S3161

CONTRACT ID.

PROJECT NO. .

BRIDGE NO. .

DATE	DESCRIPTION
.	.
.	.
.	.
.	.
.	.
.	.

IF A SEAL IS PRESENT ON THIS SHEET IT HAS BEEN ELECTRONICALLY SEALED AND DATED.

MISSOURI HIGHWAYS AND TRANSPORTATION COMMISSION
105 WEST CAPITOL
JEFFERSON CITY, MO 65102
1-888-ASK-MODOT (1-888-275-6636)

WILSON & COMPANY
ENGINEERS & ARCHITECTS
800 E 101st Terr., Ste. 200
Kansas City, MO 64131
Phone (816) 701-3100
Fax (816) 942-3013
Missouri Cert. of Authority #2003007599

EFFECTIVE: 10-01-2019

SIGN	SIZE IN.	AREA SQ.FT.	QTY EACH	TOTAL AREA SQ.FT.	QTY RELOC EACH	TOTAL RELOC SQ.FT.	SIGN NUM.	DESCRIPTION
WARNING SIGNS								
W01-1L	48X48	16.00						TURN (SYMBOL LEFT ARROW)
W01-1R	48X48	16.00						TURN (SYMBOL RIGHT ARROW)
W01-2L	48X48	16.00						CURVE (SYMBOL LEFT ARROW)
W01-2R	48X48	16.00						CURVE (SYMBOL RIGHT ARROW)
W01-3L	48X48	16.00						REVERSE TURN (SYMBOL LEFT ARROW)
W01-3R	48X48	16.00						REVERSE TURN (SYMBOL RIGHT ARROW)
W01-4L	48X48	16.00						REVERSE CURVE (SYMBOL LEFT ARROW)
W01-4R	48X48	16.00						REVERSE CURVE (SYMBOL RIGHT ARROW)
W01-4bL	48X48	16.00						DOUBLE ARROW REVERSE CURVE (SYMBOL LT ARROWS)
W01-4bR	48X48	16.00						DOUBLE ARROW REVERSE CURVE (SYMBOL RT ARROWS)
W01-4cL	48X48	16.00						TRIPLE ARROW REVERSE CURVE (SYMBOL LT ARROWS)
W01-4cR	48X48	16.00						TRIPLE ARROW REVERSE CURVE (SYMBOL RT ARROWS)
W01-6	60X30	12.50						HORIZONTAL ARROW (SYMBOL)
W01-6a	72X36	18.00						HORIZ. ARROW (SYMBOL ON PERMANENT BARRICADE)
W01-7	60X30	12.50						DOUBLE HEAD HORIZONTAL ARROW (SYMBOL)
W01-7a	72X36	18.00						DOUBLE HEAD HORIZ. ARROW (SYMBOL ON PERM. BARR.)
W01-8	18X24	3.00						CHEVRON (SYMBOL)
W01-8a	30X36	7.50						CHEVRON (SYMBOL FOR DIVIDED HIGHWAYS)
W03-1	48X48	16.00						STOP AHEAD (SYMBOL)
W03-2	48X48	16.00						YIELD AHEAD (SYMBOL)
W03-3	48X48	16.00						SIGNAL AHEAD (SYMBOL)
W03-4	48X48	16.00						BE PREPARED TO STOP
W03-5	48X48	16.00						SPEED LIMIT AHEAD
W04-1L	48X48	16.00						MERGE (SYMBOL FROM LEFT)
W04-1R	48X48	16.00						MERGE (SYMBOL FROM RIGHT)
W04-1aL	48X48	16.00						MERGE (ARROW SYMBOL)
W04-1aR	48X48	16.00						MERGE (ARROW SYMBOL)
W05-1	48X48	16.00						ROAD/BRIDGE/RAMP NARROWS
W05-3	48X48	16.00						ONE LANE BRIDGE
W05-5	48X48	16.00						NARROW LANES
W06-1	48X48	16.00						DIVIDED HIGHWAY (SYMBOL)
W06-2	48X48	16.00						DIVIDED HIGHWAY END (SYMBOL)
W06-3	48X48	16.00						TWO WAY TRAFFIC (SYMBOL)
W07-3a	30X24	5.00						NEXT XX MILES (PLAQUE)
W08-1	48X48	16.00						BUMP
W08-2	48X48	16.00						DIP
W08-3	48X48	16.00						PAVEMENT ENDS
W08-4	48X48	16.00						SOFT SHOULDER
W08-5	48X48	16.00						SLIPPERY WHEN WET (SYMBOL)
W08-6	48X48	16.00						TRUCK CROSSING
W08-6c	48X48	16.00						TRUCK ENTRANCE
W08-7	36X36	9.00						LOOSE GRAVEL
W08-7a	36X36	9.00						FRESH OIL/LOOSE GRAVEL
W08-9	48X48	16.00						LOW SHOULDER
W08-11	48X48	16.00						UNEVEN LANES
W08-12	48X48	16.00						NO CENTER LINE
W08-15	48X48	16.00						GROOVED PAVEMENT
W08-15P	30X24	5.00						MOTORCYCLE (PLAQUE)
W08-17	48X48	16.00						SHOULDER DROP-OFF (SYMBOL)
W08-17P	30X24	5.00						SHOULDER DROP-OFF (PLAQUE)
W10-1	42RND.	9.62						RAILROAD CROSSING
W012-1	24X24	4.00						DOUBLE DOWN ARROW (SYMBOL)
W012-2	48X48	16.00						LOW CLEARANCE (SYMBOL)
W012-2X	24X18	3.00						LOW CLEARANCE (PLAQUE)
W012-2a	84X24	14.00						OVERHEAD LOW CLEARANCE (FEET AND INCHES)
W012-4	120X60	50.00						LOW CLEARANCE XX FT XX IN XX MILES AHEAD
W012-5	120X60	50.00						WIDTH RESTRICTION XX FT XX IN XX MILES AHEAD
W013-1	30X30	6.25						ADVISORY SPEED (PLAQUE)
W016-2	30X24	5.00						XXX FEET (PLAQUE)
W016-3	30X24	5.00						X MILE (PLAQUE)
W020-1	48X48	16.00						ROAD/BRIDGE/RAMP WORK AHEAD
W020-2	48X48	16.00						DETOUR AHEAD
W020-3	48X48	16.00	2	32.00			20	ROAD CLOSED AHEAD
W020-4	48X48	16.00						ONE LANE ROAD AHEAD
W020-5	48X48	16.00						RIGHT/CENTER/LEFT LANE CLOSED AHEAD
W020-5a	48X48	16.00						2 RIGHT/CENTER/LEFT LANES CLOSED AHEAD
W020-6a	48X48	16.00						RIGHT/CENTER/LEFT LANE CLOSED
W020-7a	48X48	16.00						FLAGGER (SYMBOL) WITH FLAGS
W021-2	36X36	9.00						FRESH OIL
W021-5	48X48	16.00						SHOULDER WORK AHEAD
W022-1	48X48	16.00						BLASTING ZONE AHEAD
W022-2	42X36	10.50						TURN OFF 2-WAY RADIO AND PHONE
W022-3	42X36	10.50						END BLASTING ZONE
G022-1	21X15	2.19						WET PAINT (ARROW PIVOTS)

SIGN	SIZE IN.	AREA SQ.FT.	QTY EACH	TOTAL SQ.FT.	QTY RELOC EACH	TOTAL RELOC SQ.FT.	SIGN NUM.	DESCRIPTION
GUIDE SIGNS								
E05-1	36X48	12.00						GORE EXIT
E05-2	48X36	12.00						EXIT OPEN
E05-2a	48X36	12.00						EXIT CLOSED
G020-1	60X24	10.00						ROAD WORK NEXT XX MILES
G020-2	48X24	8.00						END ROAD WORK
G020-4	36X18	4.50						PILOT CAR FOLLOW ME
G020-4a	42X30	8.75						PILOT CAR IN USE WAIT & FOLLOW
G020-4a	18X12	1.50						PILOT CAR IN USE WAIT & FOLLOW
G020-5aP	36X24	6.00						WORK ZONE (PLAQUE)
M04-8a	24X18	3.00						END DETOUR
M04-9L	48X36	12.00						DETOUR (LEFT ARROW)
M04-9R	48X36	12.00						DETOUR (RIGHT ARROW)
M04-9P	48X12	4.00						STREET NAME (PLAQUE)
M04-10L	48X18	6.00						DETOUR (ARROW LEFT)
M04-10R	48X18	6.00						DETOUR (ARROW RIGHT)
REGULATORY SIGNS								
R1-1	48X48	13.25						STOP
R1-2	48TRI.	6.93						YIELD
R1-2a	36X36	9.00						TO ONCOMING TRAFFIC (PLAQUE)
R1-3P	30X12	2.50						ALL WAY (PLAQUE)
R2-1	36X48	12.00						SPEED LIMIT XX
R3-1	48X48	16.00						NO RIGHT TURN (SYMBOL)
R3-2	48X48	16.00						NO LEFT TURN (SYMBOL)
R3-3	36X36	9.00						NO TURNS
R3-4	48X48	16.00						NO U-TURN (SYMBOL)
R3-7L	30X30	6.25						LEFT LANE MUST TURN LEFT
R3-7R	30X30	6.25						RIGHT LANE MUST TURN RIGHT
R4-1	36X48	12.00						DO NOT PASS
R4-2	36X48	12.00						PASS WITH CARE
R4-8a	36X48	12.00						KEEP LEFT (HORIZONTAL ARROW)
R4-7a	36X48	12.00						KEEP RIGHT (HORIZONTAL ARROW)
R5-1	30X30	6.25						DO NOT ENTER
R5-1a	36X24	6.00						WRONG WAY
R6-1L	54X18	6.75						ONE WAY ARROW (LEFT)
R6-1R	54X18	6.75						ONE WAY ARROW (RIGHT)
R6-2L	24X30	5.00						ONE WAY (LEFT)
R6-2R	24X30	5.00						ONE WAY (RIGHT)
R9-9	24X12	2.00						SIDEWALK CLOSED
R9-11L	24X18	3.00						SIDEWALK CLOSED AHEAD, (ARROW LEFT) CROSS HERE
R9-11R	24X18	3.00						SIDEWALK CLOSED AHEAD, (ARROW RIGHT) CROSS HERE
R10-6	24X36	6.00						STOP HERE ON RED (45° ARROW)
R11-2	48X30	10.00	2	20.00			29	ROAD CLOSED
							55A	ROAD CLOSED XX MILES AHEAD
R11-3a	60X30	12.50	2	25.00			55B	LOCAL TRAFFIC ONLY 1@ 3, 1@ 2
R11-4	60X30	12.50	2	25.00			30	ROAD CLOSED TO THRU TRAFFIC
CONST-3A	60X48	20.00						FINE SIGN
CONST-3X	56X12	4.67						SPEEDING/PASSING (PLATE)
MISCELLANEOUS SIGNS								
CONST-5	48X36	12.00						POINT OF PRESENCE
CONST-5	96X48	32.00	2	64.00	2	64.00	60	POINT OF PRESENCE
CONST-7	48X24	8.00						RATE OUR WORK ZONE
CONST-7	72X36	18.00						RATE OUR WORK ZONE
CONST-8	48X36	12.00						WORK ZONE NO PHONE ZONE
CONST-5P	60X8	3.33	2	6.66			60A	POINT OF PRESENCE
WO20-3A	48X48	16.00	2	32.00			20A	ROAD CLOSED 500 FT

616-10.05 CONSTRUCTION SIGNS	TOTAL	205
616-10.10 RELOCATED SIGNS	TOTAL	64

ITEM NUMBER	TOTAL QTY	DESCRIPTION
6122008		IMPACT ATTENUATOR 40 MPH (SAND BARRELS)
6122009		IMPACT ATTENUATOR 45 MPH (SAND BARRELS)
6122010		IMPACT ATTENUATOR 50 MPH (SAND BARRELS)
6122012		IMPACT ATTENUATOR 55 MPH (SAND BARRELS)
6122014		IMPACT ATTENUATOR 60 MPH (SAND BARRELS)
6122017		IMPACT ATTENUATOR 65 MPH (SAND BARRELS)
6122019		IMPACT ATTENUATOR 70 MPH (SAND BARRELS)
6122020		REPLACEMENT SAND BARREL
6122030		IMPACT ATTENUATOR (RELOCATION)
6123000A		TRUCK OR TRAILER MOUNTED ATTENUATOR (TMA)
6161007		SPEED LIMIT AND STROBE LIGHT ASSEMBLY
6161008	2	ADVANCED WARNING RAIL SYSTEM
6161009	2	FLAG ASSEMBLY
6161012		BUOYS (BOATS KEEP OUT)
6161013		BUOYS (NO WAKE)
6161014		SPECIAL SIGN ASSEMBLY (BOATS KEEP OUT)
6161024		CHANNELIZER (TRIM LINE) WITH LIGHT
6161025		CHANNELIZER (TRIM LINE)
6161030		TYPE III MOVEABLE BARRICADE
6161031	10	TYPE III MOVEABLE BARRICADE WITH LIGHTS
6161033		DIRECTION INDICATOR BARRICADE
6161034		DIRECTION INDICATOR BARRICADE, WITH LIGHT
6161040		FLASHING ARROW PANEL
6161047		TYPE III OBJECT MARKER
6161052		WARNING LIGHT, TYPE B
6161055		SEQUENTIAL FLASHING WARNING LIGHT
6161070		TUBULAR MARKER
6161095		RADAR SPEED ADVISORY SYSTEM
6161096		CHANGEABLE MESSAGE SIGN, COMMISSION FURNISHED/RETAINED
6161098A		CHANGEABLE MESSAGE SIGN W/O COMM. INTERFACE, CONTRACTOR FURNISHED/RETAINED
6161099		CHANGEABLE MESSAGE SIGN WITH COMM. INTERFACE, CONTRACTOR FURNISHED/RETAINED
6162000A		WORK ZONE TRAFFIC SIGNAL SYSTEM
6162002		TEMPORARY LONG-TERM RUMBLE STRIPS
6162004		TEMPORARY SHORT-TERM RUMBLE STRIPS
6173600D		TEMPORARY TRAFFIC BARRIER CONTRACTOR FURNISHED/RETAINED
6173602B		TEMPORARY TRAFFIC BARRIER CONTRACTOR FURNISHED/COMMISSION RETAINED
6174000A		TEMP. TRAFFIC BARRIER HEIGHT TRANSITION
6175010A		RELOCATING TEMPORARY TRAFFIC BARRIER
6176000B		TEMPORARY TRAFFIC BARRIER COMMISSION FURNISHED/RETAINED
6177000B		TEMP. TRAFFIC BARRIER HEIGHT TRANSITION COMMISSION FURNISHED/RETAINED
6208064A		TEMPORARY RAISED PAVEMENT MARKER
9029400		TEMPORARY TRAFFIC SIGNALS
9029401		TEMPORARY TRAFFIC SIGNALS AND LIGHTING

SUMMARY OF QUANTITIES
SHEET 2 OF 2

STATE OF MISSOURI
WESLEY A O'NEAL
NUMBER PE-2018021231
PROFESSIONAL ENGINEER
"THIS SHEET HAS BEEN SIGNED, SEALED AND DATED ELECTRONICALLY.

DATE PREPARED 6/30/2020

ROUTE	STATE
BB	MO
DISTRICT	SHEET NO.
NW	3

COUNTY: MERCER
JOB NO.: J1S3161
CONTRACT ID.:
PROJECT NO.: .
BRIDGE NO.: .

DESCRIPTION	DATE
.	.
.	.
.	.
.	.
.	.
.	.

IF A SEAL IS PRESENT ON THIS SHEET IT HAS BEEN ELECTRONICALLY SEALED AND DATED.

MISSOURI HIGHWAYS AND TRANSPORTATION COMMISSION
105 WEST CAPITOL
JEFFERSON CITY, MO 65102
1-888-ASK-MODOT (1-888-275-6636)

WILSON & COMPANY
ENGINEERS & ARCHITECTS
800 E 101st Terr., Ste. 200
Kansas City, MO 64131
Phone (816) 701-3100
Fax (816) 942-3013
Missouri Cert. of Authority #2003007599

PERMANENT EASEMENTS TRACT 1		
SEGMENT ID	LENGTH (FT.)	BEARING OR BACK TANGENT
(A)	154.12	N 88°46′54″ W
(B)	204.41	S 53°15′43″ W
(C)	100.00	S 18°10′17″ E
(D)	357.78	N 53°15′43″ E

PERMANENT EASEMENTS TRACT 2		
SEGMENT ID	LENGTH (FT.)	BEARING OR BACK TANGENT
(E)	42.22	N 53°15′43″ E
(F)	100.00	N 18°10′17″ W
(G)	195.59	S 53°15′43″ W
(H)	154.12	S 88°46′54″ E

BENCHMARKS - (NAVD88)

B.M. 2 - SET BAR WITH WCI ALUM CAP
STA. 188+06.83, 18.16 LT.
ELEV. 880.85

B.M. 3 - SET BAR WITH WCI ALUM CAP
STA. 184+85.18, 53.87 LT.
ELEV. 875.55

B.M. 4 - SET BAR WITH WCI ALUM CAP
STA. 178+17.53, 21.79 RT.
ELEV. 883.87

SCALE
0 50 100 150

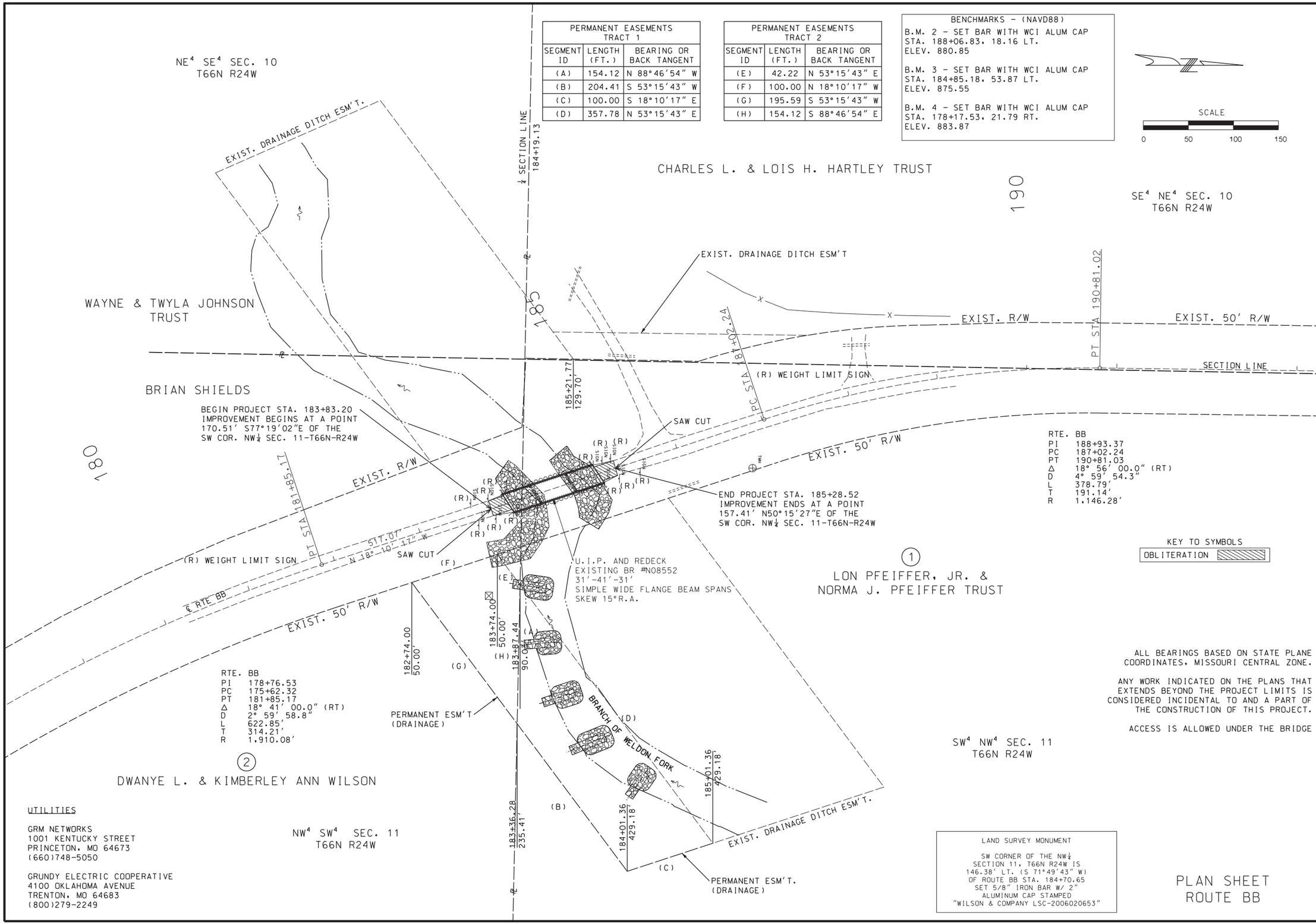

ALL BEARINGS BASED ON STATE PLANE COORDINATES, MISSOURI CENTRAL ZONE.

ANY WORK INDICATED ON THE PLANS THAT EXTENDS BEYOND THE PROJECT LIMITS IS CONSIDERED INCIDENTAL TO AND A PART OF THE CONSTRUCTION OF THIS PROJECT.

ACCESS IS ALLOWED UNDER THE BRIDGE

UTILITIES

GRM NETWORKS
1001 KENTUCKY STREET
PRINCETON, MO 64673
(660)748-5050

GRUNDY ELECTRIC COOPERATIVE
4100 OKLAHOMA AVENUE
TRENTON, MO 64683
(800)279-2249

LAND SURVEY MONUMENT

SW CORNER OF THE NW¼
SECTION 11, T66N R24W IS
146.38' LT. (S 71°49'43" W)
OF ROUTE BB STA. 184+70.65
SET 5/8" IRON BAR W/ 2"
ALUMINUM CAP STAMPED
"WILSON & COMPANY LSC-2006020653"

PLAN SHEET
ROUTE BB

STATE OF MISSOURI
WESLEY A O'NEAL
NUMBER PE-2018021231
PROFESSIONAL ENGINEER

"THIS SHEET HAS BEEN SIGNED, SEALED AND DATED ELECTRONICALLY.

DATE PREPARED	6/30/2020
ROUTE	BB
STATE	MO
DISTRICT	NW
SHEET NO.	4
COUNTY	MERCER
JOB NO.	J1S3161
CONTRACT ID.	
PROJECT NO.	.
BRIDGE NO.	.

DESCRIPTION	DATE
.	.
.	.
.	.
.	.
.	.
.	.

IF A SEAL IS PRESENT ON THIS SHEET IT HAS BEEN ELECTRONICALLY SEALED AND DATED.

MISSOURI HIGHWAYS AND TRANSPORTATION COMMISSION
105 WEST CAPITOL
JEFFERSON CITY, MO 65102
1-888-ASK-MODOT (1-888-275-6636)

WILSON & COMPANY
ENGINEERS & ARCHITECTS
800 E 101st Terr., Ste. 200
Kansas City, MO 64131
Phone (816) 701-3100
Fax (816) 942-3013
Missouri Cert. of Authority #2003007599

TRAFFIC CONTROL LEGEND

- • SIGN (SINGLE SIDED)
- TYPE III MOVABLE BARRICADE WITH LIGHT

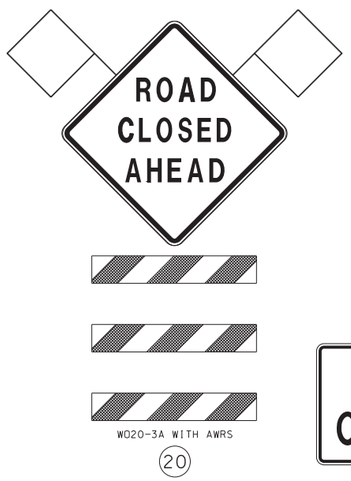

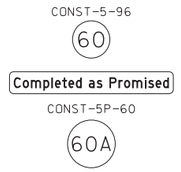

NOTES:

TYPE III MOVABLE BARRICADES FOR BRIDGE CLOSURE WORKZONE SHALL BE WITH LIGHTS. SEE STD 616.10 FOR PLACEMENT OF LIGHTS AND SIGNS ON BARRICADES.

ALL SIGNS SHOULD BE PLACED APPROXIMATELY 500' APART UNLESS OTHERWISE SHOWN.

ALL STATIONS, SPACING, AND DISTANCES OF TRAFFIC CONTROL DEVICES ARE APPROXIMATE AND MAY BE REVISED AS DIRECTED BY THE ENGINEER TO FIT FIELD CONDITIONS.

ANY EXISTING SIGNS THAT CONFLICT WITH THIS TRAFFIC CONTROL PLAN SHALL BE COVERED.

* SIGN MOUNTED TO BARRICADE

** SIGN (60) PLACED DURING CONSTRUCTION.

*** SIGN (60) RELOCATED TO BEGIN AND END OF PROJECT AFTER CONSTRUCTION WITH SIGN (60A) MOUNTED ON SIGN (60).

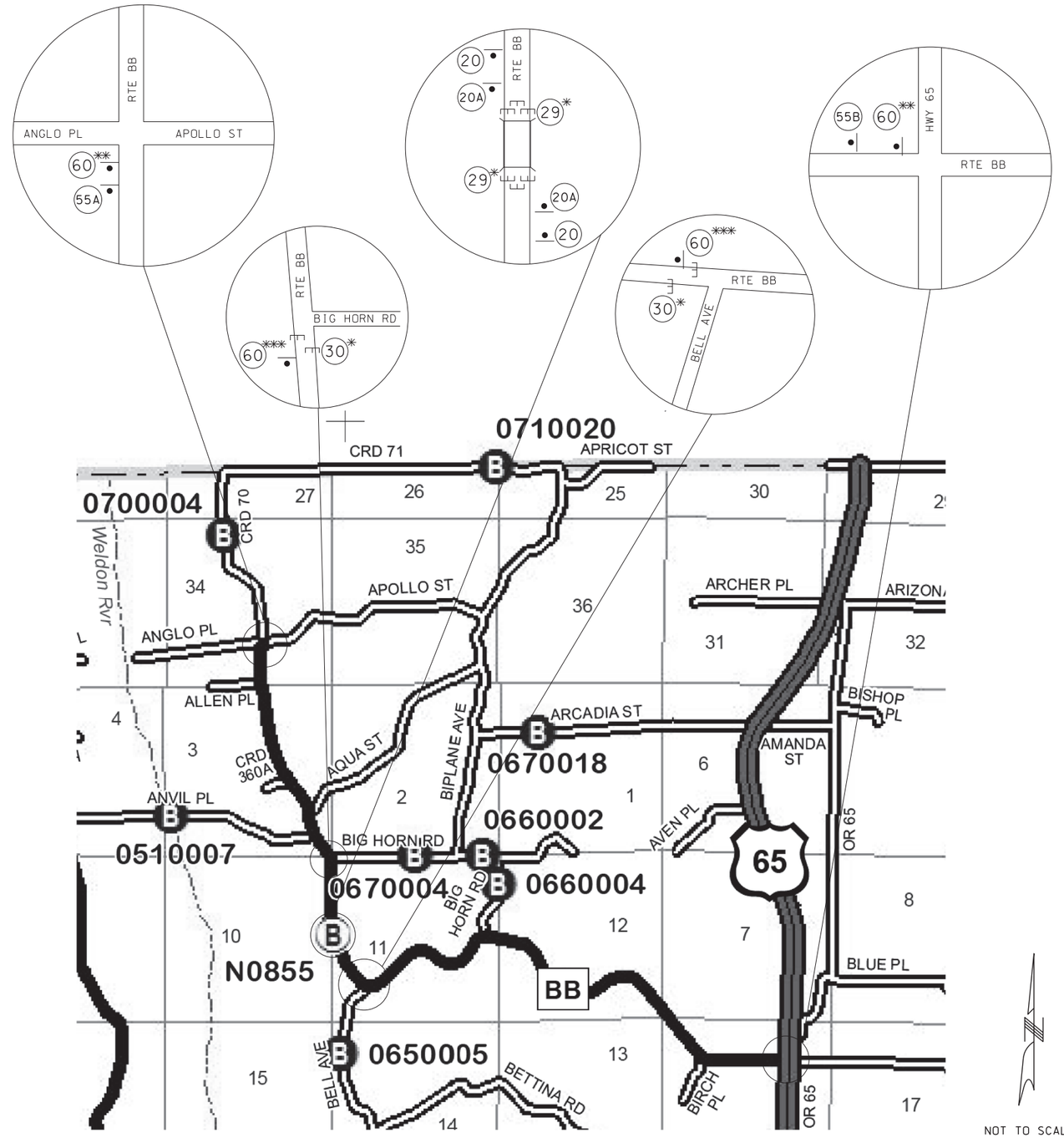

NOT TO SCALE

TRAFFIC CONTROL
SHEET 1 OF 2

STATE OF MISSOURI
WESLEY A. O'NEAL
NUMBER PE-2018021231
PROFESSIONAL ENGINEER

"THIS SHEET HAS BEEN SIGNED, SEALED AND DATED ELECTRONICALLY."

DATE PREPARED	
6/30/2020	
ROUTE BB	STATE MO
DISTRICT NW	SHEET NO. 5
COUNTY MERCER	
JOB NO. J1S3161	
CONTRACT ID.	
PROJECT NO.	
BRIDGE NO.	

DATE	DESCRIPTION

IF A SEAL IS PRESENT ON THIS SHEET IT HAS BEEN ELECTRONICALLY SEALED AND DATED.

MISSOURI HIGHWAYS AND TRANSPORTATION COMMISSION
MoDOT
105 WEST CAPITOL
JEFFERSON CITY, MO 65102
1-888-ASK-MODOT (1-888-275-6636)

WILSON & COMPANY
ENGINEERS & ARCHITECTS
800 E 101st Terr., Ste. 200
Kansas City, MO 64131
Phone (816) 701-3100
Fax (816) 942-3013
Missouri Cert. of Authority #2003007599

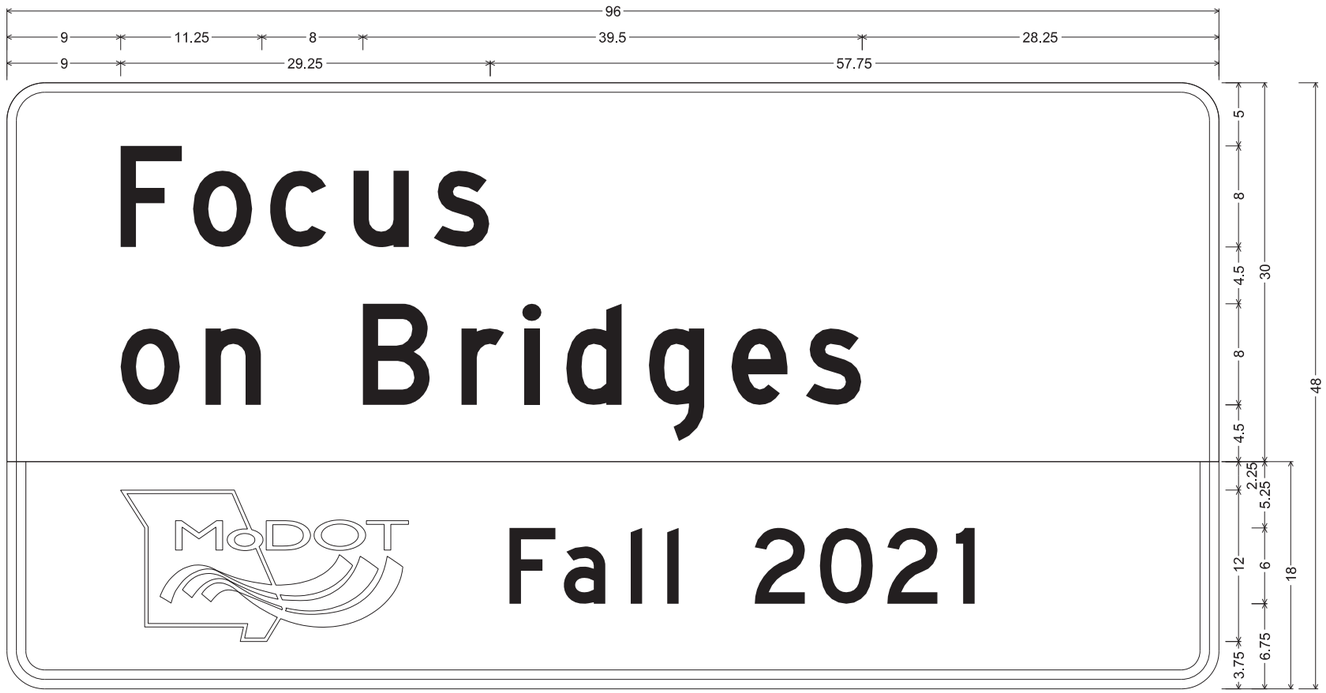

CONST-5-96 SH-FLAT SHEET; 3.000" Radius, 0.750" Border, White on Blue;
[Focus] D; [on Bridges] D; [ ] Black E;
3.000" Radius, 0.750" Border, 0.750" Indent, Blue on White;
[Fall 2021] D;
Table of letter and object lefts.

F 9.000	o 14.750	c 20.875	u 27.500	s 33.875

o 9.000	n 15.750	B 28.250	r 36.000	i 41.000	d 44.250	g 50.875	e 57.375	s 63.250

9.000	F 39.750	a 44.125	l 49.375	l 52.250	2 59.250	0 64.375	2 69.750	1 75.125

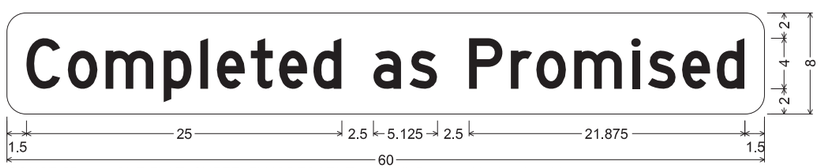

CONST-5P-60 SHF-FLAT SHEET FLUORESCENT; 1.500" Radius, No border, Yellow;
[Completed as Promised] Black D 65% spacing;
Table of letter and object lefts.

C 1.500	o 4.875	m 7.875	p 12.375	l 15.375	e 16.625	t 19.375	e 21.500	d 24.250	a 29.000	s 31.875

P 36.625	r 39.875	o 41.875	m 44.875	i 49.500	s 50.750	e 53.500	d 56.250

TRAFFIC CONTROL
SHEET 2 OF 2

STATE OF MISSOURI
WESLEY A O'NEAL
NUMBER PE-2018021231
PROFESSIONAL ENGINEER

THIS SHEET HAS BEEN SIGNED, SEALED AND DATED ELECTRONICALLY.

DATE PREPARED 6/30/2020

ROUTE	STATE
BB	MO
DISTRICT	SHEET NO.
NW	6

COUNTY MERCER

JOB NO. J1S3161

CONTRACT ID.

PROJECT NO.

BRIDGE NO.

DATE	DESCRIPTION

IF A SEAL IS PRESENT ON THIS SHEET IT HAS BEEN ELECTRONICALLY SEALED AND DATED.

MISSOURI HIGHWAYS AND TRANSPORTATION COMMISSION
105 WEST CAPITOL
JEFFERSON CITY, MO 65102
1-888-ASK-MODOT (1-888-275-6636)

WILSON & COMPANY
ENGINEERS & ARCHITECTS
800 E 101st Terr., Ste. 200
Kansas City, MO 64131
Phone (816) 701-3100
Fax (816) 942-3013
Missouri Cert. of Authority #2003007599

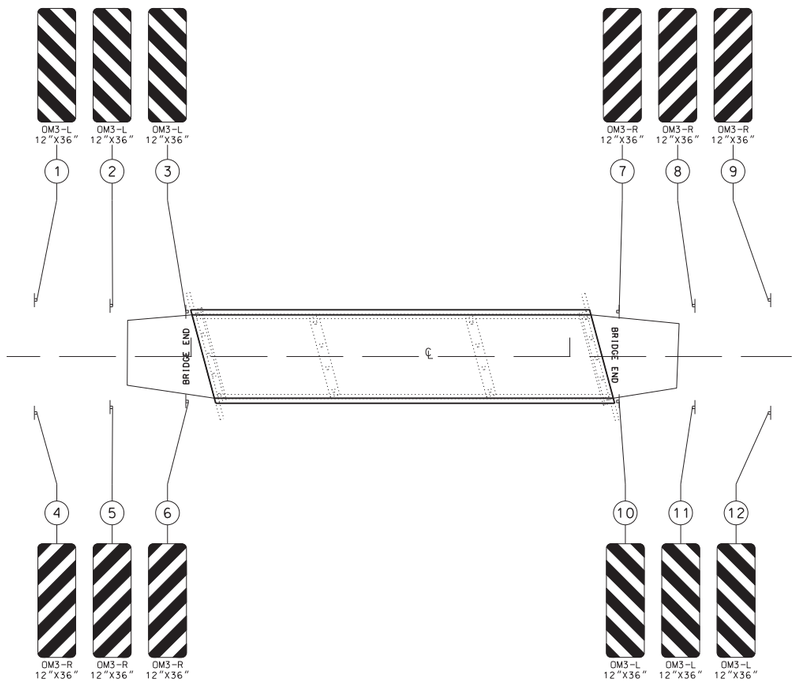

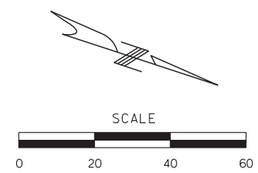

SIGNS					PERFORATED SQUARE STEEL TUBE POST 2 IN		
SIGN NO	SIGN SIZE	STATION	LOCATION	SIGN DETAIL SHEET NO	POST NO 1	TOTAL ITEM NO 9031270A	ANCHOR 12 GA ITEM NO 9031271
					LF	LF	LF
1	12"X36"	183+63.20	15.5' L	STD	9.0	9.0	3
2	12"X36"	183+83.20	14.0' L	STD	8.5	8.5	3
3	12"X36"	184+03.20	12.5' L	STD	8.0	8.0	3
4	12"X36"	183+63.20	15.5' R	STD	9.0	9.0	3
5	12"X36"	183+83.20	14.0' R	STD	8.5	8.5	3
6	12"X36"	184+03.20	12.5' R	STD	8.0	8.0	3
7	12"X36"	185+08.52	12.5' L	STD	8.0	8.0	3
8	12"X36"	185+28.52	14.0' L	STD	8.5	8.5	3
9	12"X36"	185+48.52	15.5' L	STD	9.0	9.0	3
10	12"X36"	185+08.52	12.5' R	STD	8.0	8.0	3
11	12"X36"	185+28.52	14.0' R	STD	8.5	8.5	3
12	12"X36"	185+48.52	15.5' R	STD	9.0	9.0	3
				TOTALS		102	36

STANDARD SIGN ASSEMBLIES				
SIGN NUMBER	SIGN SIZE	STATION	FLAT SHEET FLUORESCENT SIGN DESCRIPTION, SIZES & NUMBER OF EACH	
			OM3-L 12"X36"	OM3-R 12"X36"
1	12"X36"	183+63.20	1	
2	12"X36"	183+83.20	1	
3	12"X36"	184+03.20	1	
4	12"X36"	183+63.20		1
5	12"X36"	183+83.20		1
6	12"X36"	184+03.20		1
7	12"X36"	185+08.52		1
8	12"X36"	185+28.52		1
9	12"X36"	185+48.52		1
10	12"X36"	185+08.52	1	
11	12"X36"	185+28.52	1	
12	12"X36"	185+48.52	1	
		TOTALS	6	6

SIGN SUMMARY				
STANDARD SIGN	SIGN DETAIL SHEET NO	NO EACH	SIZE, TYPE & SQ FT	
			SIZE	FLAT SHEET* FLUORESCENT ITEM NO 9035069A
OM3-L	STD	6	12"x36"	18
OM3-R	STD	6	12"x36"	18
			TOTAL	36

*YELLOW

SIGNING
SHEET 1 OF 1

STATE OF MISSOURI
WESLEY A O'NEAL
NUMBER PE-2018021231
PROFESSIONAL ENGINEER

THIS SHEET HAS BEEN SIGNED, SEALED AND DATED ELECTRONICALLY.

DATE PREPARED
6/30/2020

ROUTE	STATE
BB	MO
DISTRICT	SHEET NO.
NW	7

COUNTY
MERCER

JOB NO.
J1S3161

CONTRACT ID.

PROJECT NO.
.

BRIDGE NO.
.

DESCRIPTION	DATE
.	.
.	.
.	.
.	.
.	.
.	.
.	.

MISSOURI HIGHWAYS AND TRANSPORTATION COMMISSION
105 WEST CAPITOL
JEFFERSON CITY, MO 65102
1-888-ASK-MODOT (1-888-275-6636)

IF A SEAL IS PRESENT ON THIS SHEET IT HAS BEEN ELECTRONICALLY SEALED AND DATED.

WILSON & COMPANY
ENGINEERS & ARCHITECTS
800 E 101st Terr., Ste. 200
Kansas City, MO 64131
Phone (816) 701-3100
Fax (816) 942-3013
Missouri Cert. of Authority #2003007599

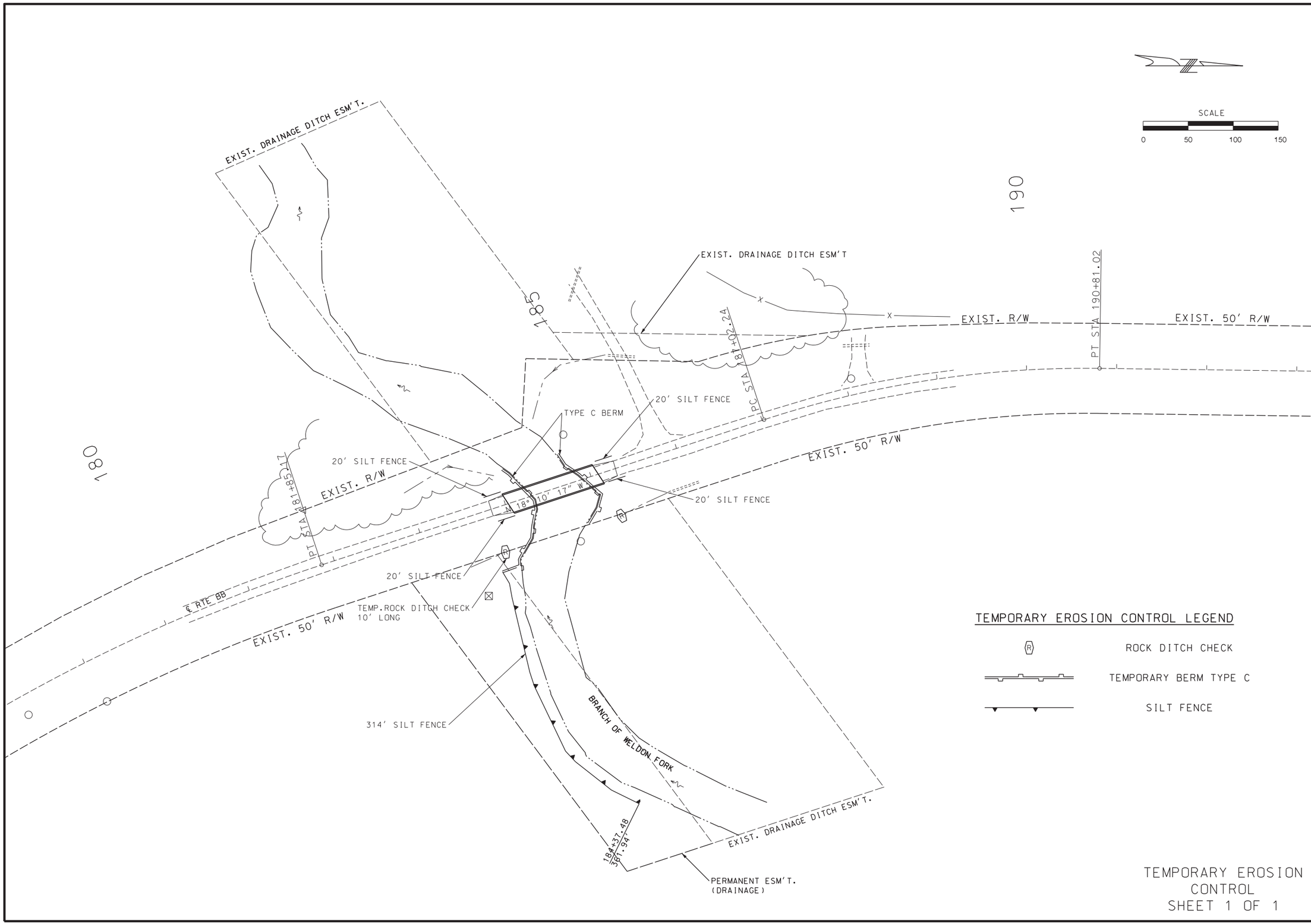

TEMPORARY EROSION CONTROL
SHEET 1 OF 1

STATE OF MISSOURI
WESLEY A O'NEAL
NUMBER PE-2018021231
PROFESSIONAL ENGINEER

THIS SHEET HAS BEEN SIGNED, SEALED AND DATED ELECTRONICALLY.

DATE PREPARED	6/30/2020
ROUTE	BB
STATE	MO
DISTRICT	NW
SHEET NO.	8
COUNTY	MERCER
JOB NO.	J1S3161
CONTRACT ID.	
PROJECT NO.	.
BRIDGE NO.	.

DATE	DESCRIPTION
.	.
.	.
.	.
.	.
.	.
.	.
.	.

IF A SEAL IS PRESENT ON THIS SHEET IT HAS BEEN ELECTRONICALLY SEALED AND DATED.

MISSOURI HIGHWAYS AND TRANSPORTATION COMMISSION
MoDOT
105 WEST CAPITOL
JEFFERSON CITY, MO 65102
1-888-ASK-MODOT (1-888-275-6636)

WILSON & COMPANY
ENGINEERS & ARCHITECTS
800 E 101st Terr., Ste. 200
Kansas City, MO 64131
Phone (816) 701-3100
Fax (816) 942-3013
Missouri Cert. of Authority #2003007599

ROCK WEIR TIE POINTS

UNIT:	1		2		3		4		5	
	BANK	CHANNEL	BANK	CHANNEL	BANK	CHANNEL	BANK	CHANNEL	BANK	CHANNEL
STATION ALONG RTE. BB:	183+91.07	184+13.36	183+83.00	184+03.53	183+82.97	184+07.62	183+95.40	184+24.69	184+38.64	184+54.32
RTE. BB OFFSET RT. (FT.):	91.79	103.04	157.32	162.23	222.04	222.09	281.54	279.61	343.68	331.78
NORTHING:	1715208.80	1715233.48	1715221.56	1715242.60	1715241.72	1715265.16	1715272.08	1715299.31	1715332.55	1715343.74
EASTING:	1339190.73	1339194.47	1339255.51	1339253.77	1339317.01	1339309.37	1339369.66	1339358.70	1339415.23	1339399.03
LENGTH BANK TO CHANNEL "X" (FT.):	24.96		21.11		24.65		29.36		19.69	

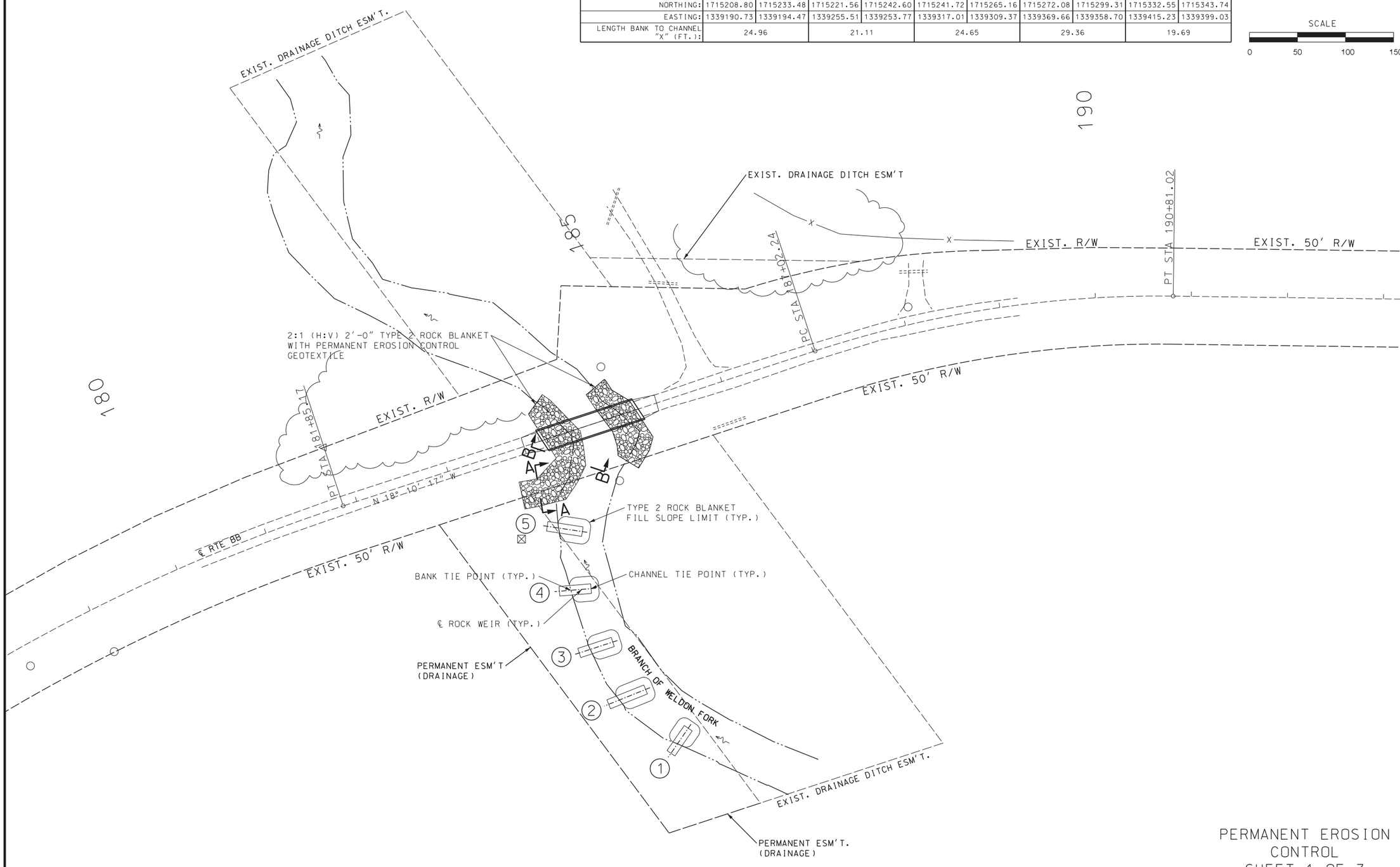

PERMANENT EROSION CONTROL
SHEET 1 OF 3

STATE OF MISSOURI
WESLEY A O'NEAL
NUMBER PE-2018021231
PROFESSIONAL ENGINEER

"THIS SHEET HAS BEEN SIGNED, SEALED AND DATED ELECTRONICALLY.

IF A SEAL IS PRESENT ON THIS SHEET IT HAS BEEN ELECTRONICALLY SEALED AND DATED.

DATE PREPARED	6/30/2020
ROUTE	BB
STATE	MO
DISTRICT	NW
SHEET NO.	9
COUNTY	MERCER
JOB NO.	J1S3161
CONTRACT ID.	
PROJECT NO.	.
BRIDGE NO.	.

DATE	DESCRIPTION
.	.
.	.
.	.
.	.
.	.
.	.

MISSOURI HIGHWAYS AND TRANSPORTATION COMMISSION
105 WEST CAPITOL
JEFFERSON CITY, MO 65102
1-888-ASK-MODOT (1-888-275-6636)

WILSON & COMPANY
ENGINEERS & ARCHITECTS
800 E 101st Terr., Ste. 200
Kansas City, MO 64131
Phone (816) 701-3100
Fax (816) 942-3013
Missouri Cert. of Authority #2003007599

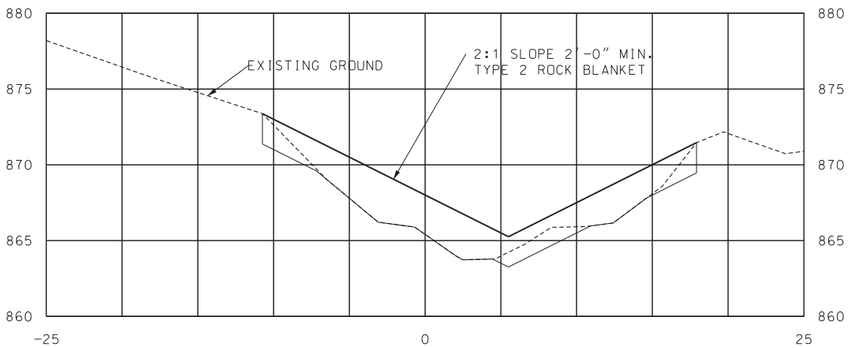

SECTION A-A

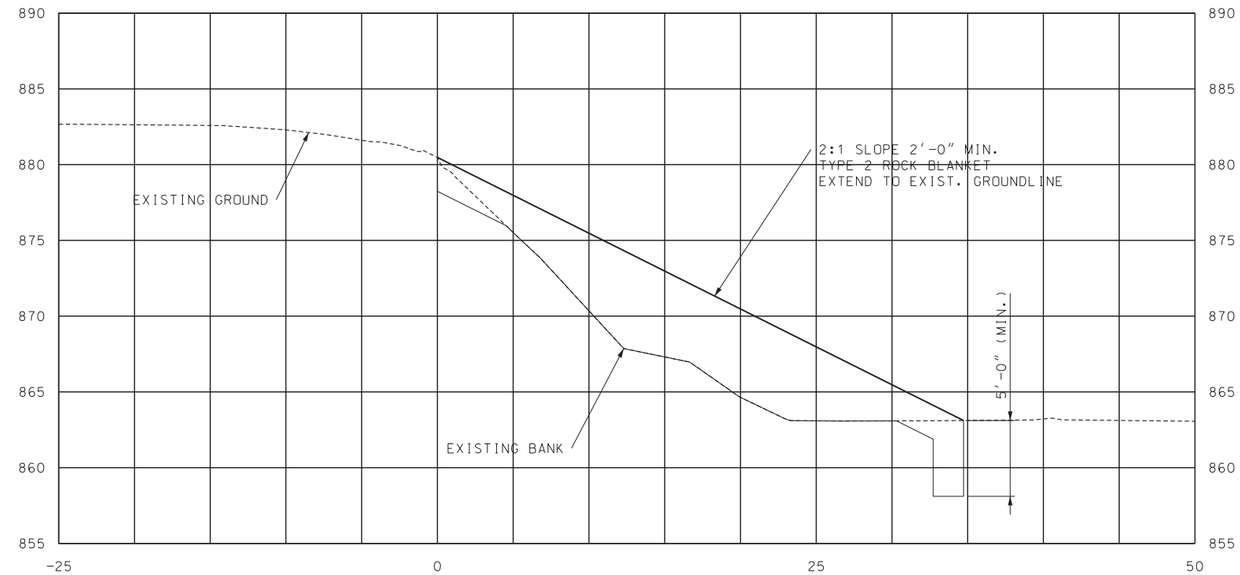

SECTION B-B

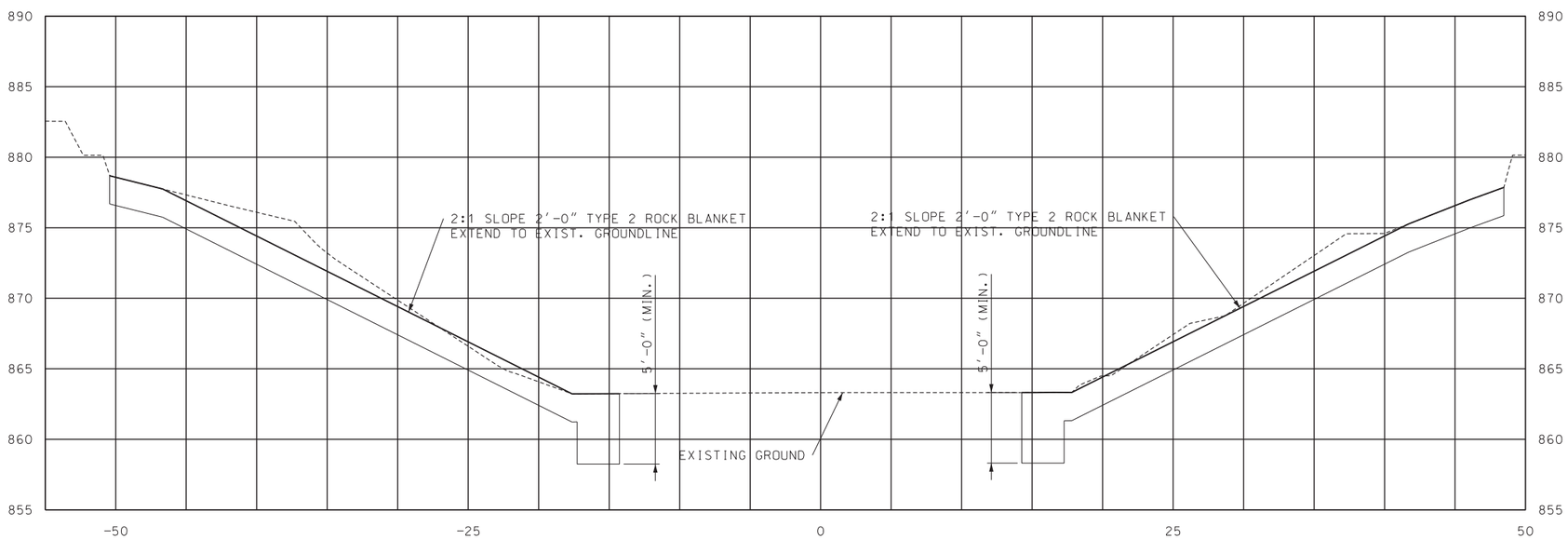

SECTION ALONG RTE BB ℄

PERMANENT EROSION
CONTROL
SHEET 2 OF 3

STATE OF MISSOURI
WESLEY A O'NEAL
NUMBER PE-2018021231
PROFESSIONAL ENGINEER

THIS SHEET HAS BEEN SIGNED, SEALED AND DATED ELECTRONICALLY.

DATE PREPARED	
6/30/2020	
ROUTE	STATE
BB	MO
DISTRICT	SHEET NO.
NW	1.0
COUNTY	
MERCER	
JOB NO.	
J1S3161	
CONTRACT ID.	
PROJECT NO.	
.	
BRIDGE NO.	
.	

DATE	DESCRIPTION
.	.
.	.
.	.
.	.
.	.
.	.
.	.

IF A SEAL IS PRESENT ON THIS SHEET IT HAS BEEN ELECTRONICALLY SEALED AND DATED.

MISSOURI HIGHWAYS AND TRANSPORTATION COMMISSION

MoDOT

105 WEST CAPITOL
JEFFERSON CITY, MO 65102
1-888-ASK-MODOT (1-888-275-6636)

WILSON & COMPANY
ENGINEERS & ARCHITECTS

800 E 101st Terr., Ste. 200
Kansas City, MO 64131
Phone (816) 701-3100
Fax (816) 942-3013

Missouri Cert. of Authority #2003007599

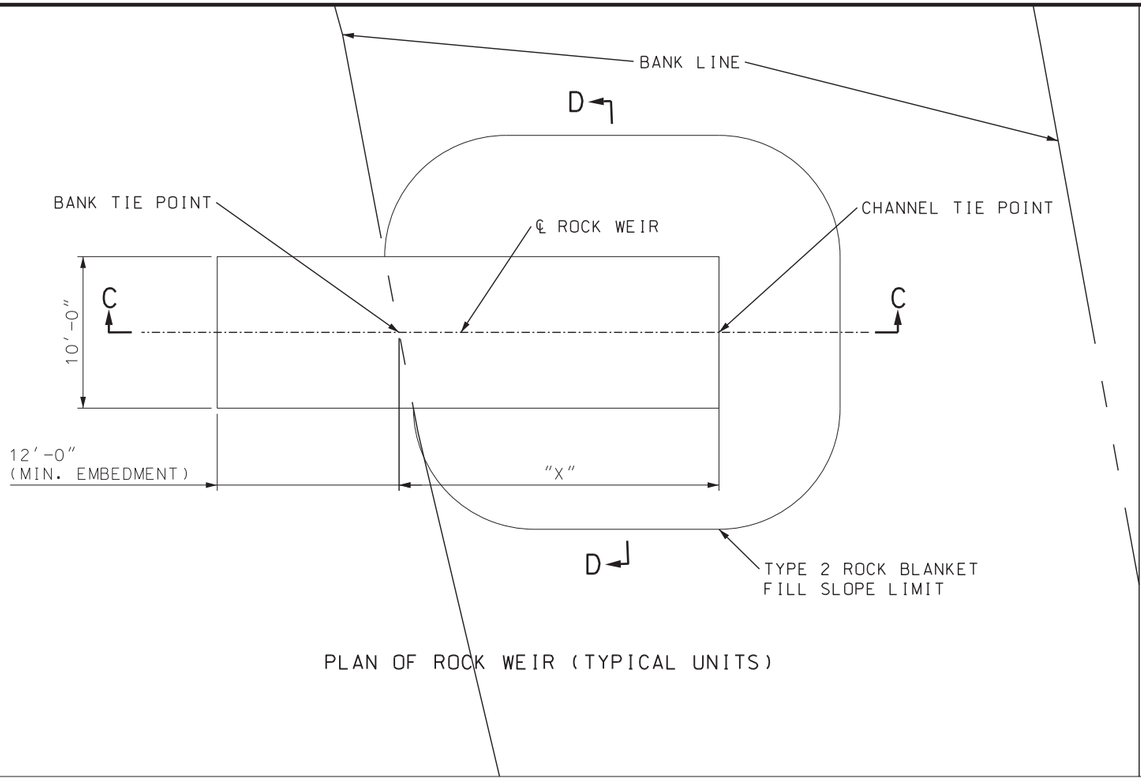

PLAN OF ROCK WEIR (TYPICAL UNITS)

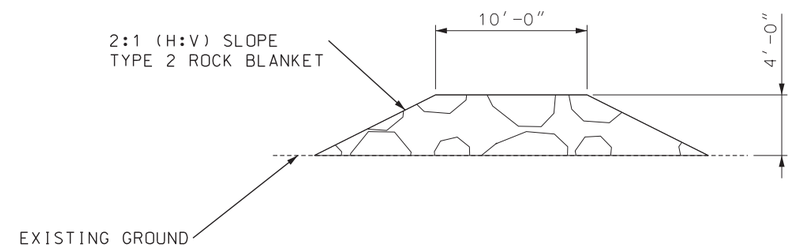

SECTION D-D

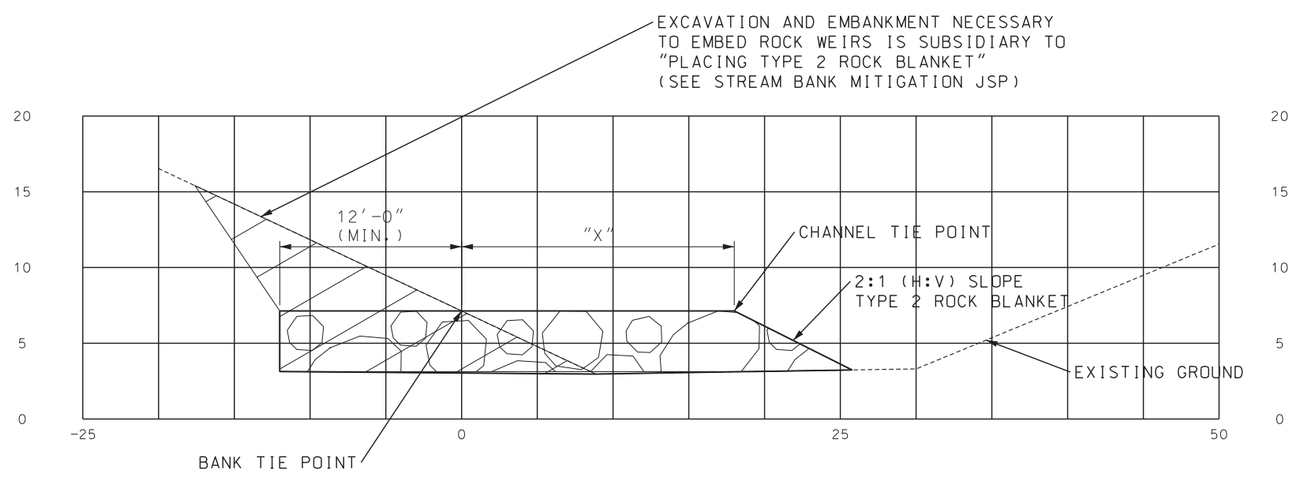

TYPICAL ROCK WEIR
SECTION C-C

PERMANENT EROSION
CONTROL
SHEET 3 OF 3

STATE OF MISSOURI
WESLEY A O'NEAL
NUMBER PE-2018021231
PROFESSIONAL ENGINEER

THIS SHEET HAS BEEN SIGNED, SEALED AND DATED ELECTRONICALLY.

DATE PREPARED	6/30/2020
ROUTE	BB
STATE	MO
DISTRICT	NW
SHEET NO.	1.1
COUNTY	MERCER
JOB NO.	J1S3161
CONTRACT ID.	
PROJECT NO.	.
BRIDGE NO.	.

DATE	DESCRIPTION
.	.
.	.
.	.
.	.
.	.
.	.
.	.

IF A SEAL IS PRESENT ON THIS SHEET IT HAS BEEN ELECTRONICALLY SEALED AND DATED.

MISSOURI HIGHWAYS AND TRANSPORTATION COMMISSION
105 WEST CAPITOL
JEFFERSON CITY, MO 65102
1-888-ASK-MODOT (1-888-275-6636)

WILSON & COMPANY
ENGINEERS & ARCHITECTS
800 E 101st Terr., Ste. 200
Kansas City, MO 64131
Phone (816) 701-3100
Fax (816) 942-3013
Missouri Cert. of Authority #2003007599

SEC/SUR 11 TWP 66N RGE 24W

U.I.P., REDECK AND MAKE COMPOSITE EXISTING 31', 41', 31' SIMPLE WIDE FLANGE BEAM SPANS (15°R.A.)

Table Showing S2 Bar Lengths			
Int. Bent No. 2		Int. Bent No. 3	
Span 1	Span 2	Span 2	Span 3
5'-0"	5'-0"	5'-0"	5'-0"

Required Lap Length For Bar Splices ✱✱	
Bar Size	Splice Length
4	2'-7"
5	3'-3"
6	3'-10"
7	4'-11"

✱✱ Unless otherwise shown.

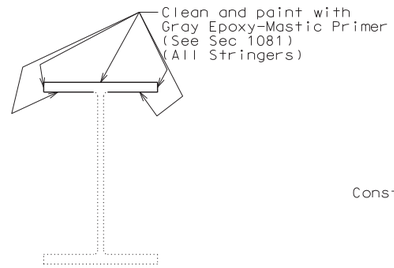

TYPICAL SECTION THRU EXIST. STRINGERS SHOWING PROTECTIVE COATING

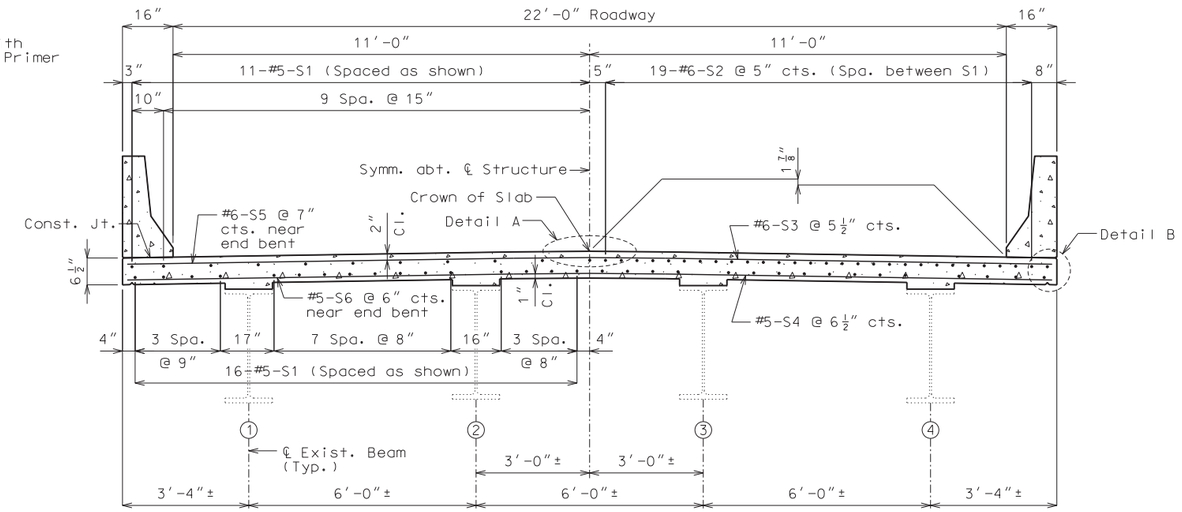

TYPICAL SECTION THRU SLAB

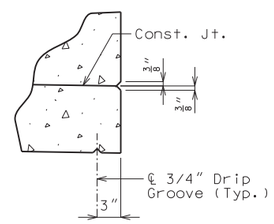

DETAIL B

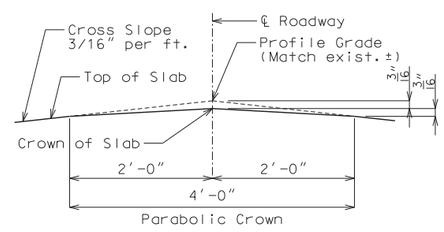

DETAIL A

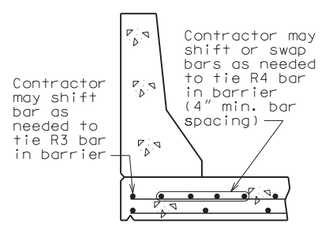

OPTIONAL SHIFTING TOP BARS AT BARRIER

General Notes:

Design Specifications:
2002 AASHTO LFD (17th Ed.) Standard Specifications
Seismic Performance Category A

Design Loading:
H15-44 (1 Lane)(1957) (Existing)
HS20-44 (New Construction)
35 lb/sf Future Wearing Surface
Earth - 120 lb/cf, Equivalent Fluid Pressure 45 lb/cf
Fatigue Stress - Case III

Design Unit Stresses:
Class B-1 Concrete (Safety Barrier Curb) f'c = 4,000 psi
Class B-2 Concrete (Superstructure, except Safety Barrier Curb) f'c = 4,000 psi
Reinforcing Steel (Grade 60) fy = 60,000 psi

Joint Filler:
All joint filler shall be in accordance with Sec 1057 for preformed sponge rubber expansion and partition joint filler, except as noted.

Reinforcing Steel:
Minimum clearance to reinforcing steel shall be 1 1/2", unless otherwise shown.

Miscellaneous:
Protective coating for concrete bents and piers (Epoxy) shall be applied as shown on the bridge plans and in accordance with Sec 711.

Bars bonded in old concrete not removed shall be cleanly stripped and embedded into new concrete where possible. If length is available, old bars shall extend into new concrete at least 40 diameters for smooth bars and 30 diameters for deformed bars, unless otherwise noted.

Roadway surfacing adjacent to bridge ends shall match new bridge slab surface. (Roadway item)

Outline of old work is indicated by light dashed lines. Heavy lines indicate new work.

Contractor shall verify all dimensions in field before ordering new material.

The area exposed by the removal of concrete and not covered with new concrete shall be coated with an approved qualified special mortar in accordance with Sec 704.

Structural Steel Protective Coating:
Top, sides, and bottom of the top flanges of existing stringers shall be coated with one 6-mil thickness coat of gray epoxy-mastic primer (non-aluminum) applied over an SSPC-SP-3 surface preparation in accordance with Sec 1081. The cost of surface preparation will be considered completely covered by the contract unit price for Slab on Steel. The cost of the gray epoxy-mastic primer (non-aluminum) will be considered completely covered by the contract unit price for Removal of Existing Bridge Decks.

Traffic Handling:
Structure to be closed during construction. See roadway plans for traffic control.

Estimated Quantities

	Item		Total
	Removal of Existing Bridge Decks	sq. foot	2,344
	Slab on Steel	sq. yard	289
✱	Type B Barrier	linear foot	210
	Substructure Repair (Formed)	sq. foot	80
	Protective Coating - Concrete Bents and Piers (Epoxy)	lump sum	1
	Shear Connectors	each	960
	Slab Drain	each	20
	Surface Preparation for Applying Epoxy Mastic Primer	lump sum	1
	Aluminum Epoxy-Mastic Primer	lump sum	1

✱ Type B barrier curb shall be cast-in-place option or slip-form option.

Cost of any required excavation for bridge will be considered completely covered by the contract unit price for other items.

Estimated Quantities for Slab on Steel

Item		Total
Class B-2 Concrete	cu. yard	54.6
Reinforcing Steel (Epoxy Coated)	pound	20,380

The table of Estimated Quantities for Slab on Steel represents the quantities used by the State in preparing the cost estimate for concrete slabs. The area of the concrete slab will be measured to the nearest square yard longitudinally from end of slab to end of slab and transversely from out to out of bridge slab (or with the horizontal dimensions as shown on the plan of slab). Payment for stay-in-place corrugated steel forms, conventional forms, all concrete and epoxy coated reinforcing steel will be considered completely covered by the contract unit price for the slab. Variations may be encountered in the estimated quantities but the variations cannot be used for an adjustment in the contract unit price.

Method of forming the slab shall be in accordance with Sec 703. All hardware for forming the slab to be left in place as a permanent part of the structure shall be coated in accordance with ASTM A123 or ASTM B633 with a thickness class SC 4 and a finish type I, II or III.

Slab shall be cast-in-place with conventional forming or stay-in-place corrugated steel forms. Precast prestressed panels will not be permitted.

For Optional Stay-In-Place Form Details, see Sheet No. 2.

REPAIRS TO BRIDGE:
ROUTE BB OVER BRANCH OF WELDON FORK
ROUTE BB FROM ROUTE 65 TO STATE LINE
ABOUT 3.5 MILES WEST OF ROUTE 65
STA. 184+03.20± (MATCH EXISTING)

STATE OF MISSOURI
WESLEY A O'NEAL
NUMBER PE-2018021231
PROFESSIONAL ENGINEER
"THIS SHEET HAS BEEN SIGNED, SEALED AND DATED ELECTRONICALLY.

DATE PREPARED 7/1/2020
ROUTE BB | STATE MO
DISTRICT BR | SHEET NO. 1
COUNTY MERCER
JOB NO. J1S3161
CONTRACT ID.
PROJECT NO.
BRIDGE NO. N08552

DESCRIPTION	DATE

IF A SEAL IS PRESENT ON THIS SHEET IT HAS BEEN ELECTRONICALLY SEALED AND DATED.

MISSOURI HIGHWAYS AND TRANSPORTATION COMMISSION
105 WEST CAPITOL
JEFFERSON CITY, MO 65102
1-888-ASK-MODOT (1-888-275-6636)

WILSON & COMPANY
ENGINEERS & ARCHITECTS
800 E 101st Terr., Ste. 200
Kansas City, MO 64131
Phone (816) 701-3100
Fax (816) 942-3013
Missouri Cert. of Authority #2003007599

Detailed May 2020
Checked June 2020

Note: This drawing is not to scale. Follow dimensions.

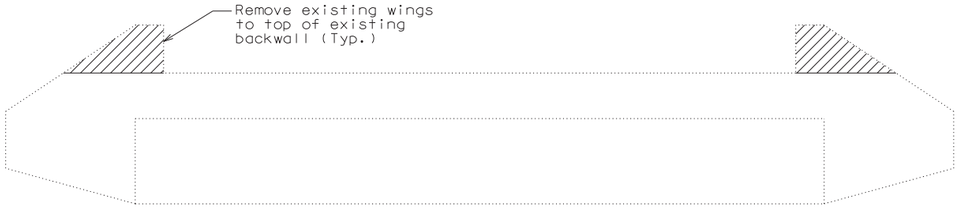

DETAILS OF CONCRETE REMOVAL AT END BENTS

The cost of concrete removal as shown will be considered completely covered by the contract unit price for Removal of Existing Bridge Decks. Vertical backwall and wingwall reinforcement to be cut off one inch below concrete removal surface and the resulting holes shall be filled with a qualified special mortar.

A smooth, level surface shall be provided at Bents No. 1 & 4 removal lines.

General Notes:

Stay-In-Place Forms:

Corrugated steel forms, supports, closure elements and accessories shall be in accordance with grade requirement and coating designation G165 of ASTM A653. Complete shop drawings of the permanent steel deck forms shall be required in accordance with Sec 1080.

Corrugations of stay-in-place forms shall be filled with an expanded polystyrene material. The polystyrene material shall be placed in the forms with an adhesive in accordance with the manufacturer's recommendations.

Form sheets shall not rest directly on the top of beam flanges. Sheets shall be securely fastened to form supports with a minimum bearing length of one inch on each end. Form supports shall be placed in direct contact with the flange. Welding on or drilling holes in the beam flanges will not be permitted. All steel fabrication and construction shall be in accordance with Sec 1080 and 712. Certified field welders will not be required for welding of the form supports.

The design of stay-in-place corrugated steel forms is per manufacturer which shall be in accordance with Sec 703 for false work and forms. Maximum actual weight of corrugated steel forms allowed shall be 4 psf assumed for beam loading.

The contractor shall provide a method of preventing the direct contact of the stay-in-place forms and connection components with uncoated weathering steel members that is approved by the engineer.

Pouring and Finishing Slab:

The contractor shall provide bracing necessary for lateral and torsional stability of the beams during construction of the concrete slab and remove the bracing after the slab has attained 75% design strength. Contractor shall not weld on or drill holes in the beams. The cost for furnishing, installing, and removing bracing will be considered completely covered by the contract unit price for Slab on Steel.

Slab shall be poured upgrade from end to end at a minimum rate of 25 cubic yards per hour.

Alternate pour sequences may be submitted to the engineer for approval. Keyed construction joints shall be provided between pours.

Haunching:

(1) Slab is to be considered a uniform thickness as shown on the plans. Haunching will vary. See front sheet for slab thickness.

Structural Steel Protective Coating:

All exposed surfaces of the existing cast-in- place concrete piles from three feet above ground to one foot below ground, including below normal low water line, shall be coated with one 6-mil thickness of aluminum gray epoxy-mastic primerapplied over an SSPC-SP3 surface preparation in accordance with Sec 1081. The bituminous coating shall be applied one foot above and one foot below the existing ground line and in accordance with Sec 702. The cost of surface preparation and any temporary shoring necessary will be considered completely covered by the contract lump sum price for Surface Preparation for Applying Epoxy-Mastic Primer. The cost of the aluminum gray epoxy-mastic primer and bituminous coating will be considered completely covered by the contract lump sum price for Aluminum Gray Epoxy-Mastic Primer.

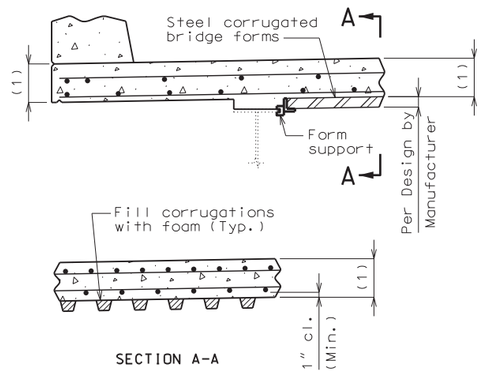

OPTIONAL STAY-IN-PLACE FORM DETAILS

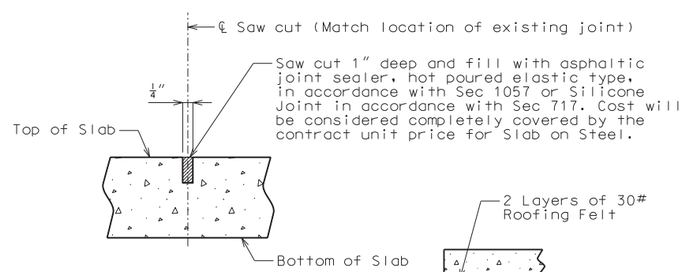

TYPICAL SECTION THRU SAW CUT AT INTERMEDIATE BENTS

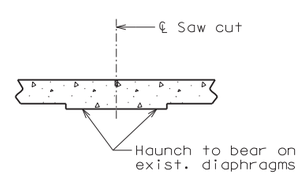

PART SECTION THRU SLAB AT INT. BENTS

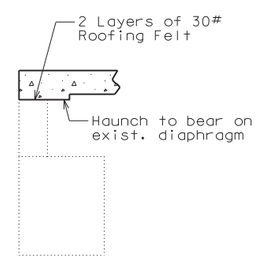

PART SECTION THRU SLAB AT END BENTS

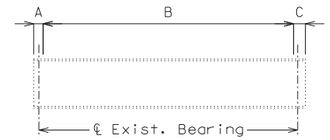

ELEVATION SHOWING SHEAR CONNECTOR SPACING

TABLE SHOWING SHEAR CONNECTOR UNIT SPACING				
Span	S.C. per unit	A	B	C
1	2	$7\frac{1}{2}$"±	33 Units @ 11" cts.	$10\frac{1}{2}$"±
2	2	$6\frac{1}{2}$"±	54 Units @ 9" cts.	$6\frac{1}{2}$"±
3	2	$10\frac{1}{2}$"±	33 Units @ 11" cts.	$7\frac{1}{2}$"±
Total shear connectors required				960

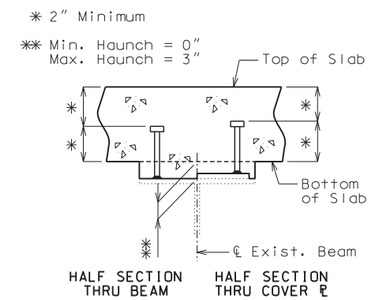

SECTION THRU EXIST. BEAM SHOWING SHEAR CONNECTORS

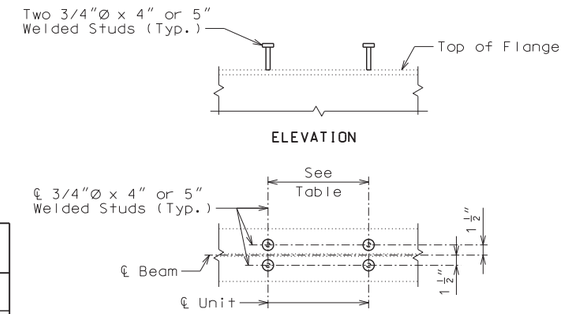

DETAILS OF SHEAR CONNECTORS

The cost of supplying and installing shear connectors will be considered completely covered by the contract unit price for Shear Connectors.

Shear connectors shall be in accordance with Sec 712, 1037 & 1080.

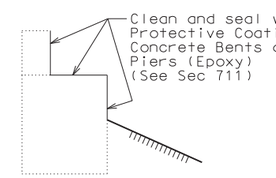

TYPICAL SECTION THRU END BENTS 1 & 4 SHOWING PROTECTIVE COATING

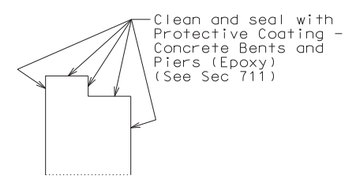

TYPICAL SECTION THRU INT. BENTS 2 & 3 SHOWING PROTECTIVE COATING

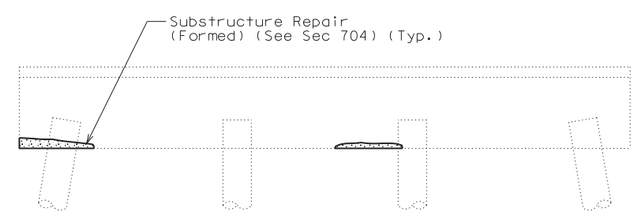

PART ELEVATION OF INTERMEDIATE BENTS NO. 2 & 3 SHOWING SUBSTRUCTURE REPAIR

STATE OF MISSOURI
WESLEY A. O'NEAL
NUMBER PE-2018021231
PROFESSIONAL ENGINEER
THIS SHEET HAS BEEN SIGNED, SEALED AND DATED ELECTRONICALLY.

DATE PREPARED	
7/1/2020	
ROUTE BB	STATE MO
DISTRICT BR	SHEET NO. 2
COUNTY MERCER	
JOB NO. J1S3161	
CONTRACT ID.	
PROJECT NO.	
BRIDGE NO. N08552	

DESCRIPTION	DATE

IF A SEAL IS PRESENT ON THIS SHEET IT HAS BEEN ELECTRONICALLY SEALED AND DATED.

MISSOURI HIGHWAYS AND TRANSPORTATION COMMISSION
105 WEST CAPITOL
JEFFERSON CITY, MO 65102
1-888-ASK-MODOT (1-888-275-6636)

WILSON & COMPANY
ENGINEERS & ARCHITECTS
800 E 101st Terr., Ste. 200
Kansas City, MO 64131
Phone (816) 701-3100
Fax (816) 942-3013
Missouri Cert. of Authority #2003007599

Detailed May 2020
Checked June 2020

Note: This drawing is not to scale. Follow dimensions.

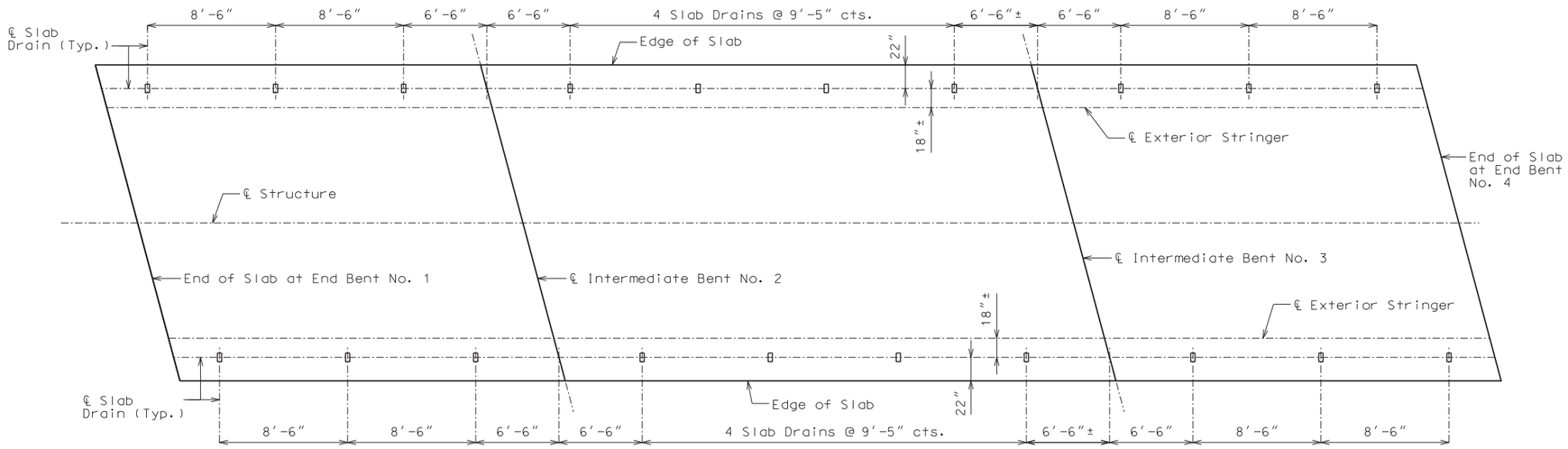

PLAN OF SLAB SHOWING SLAB DRAIN LOCATIONS

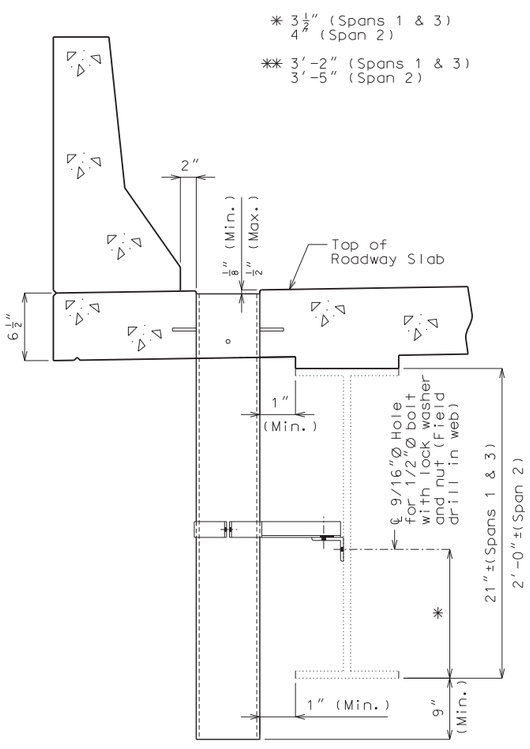

PART SECTION NEAR DRAIN

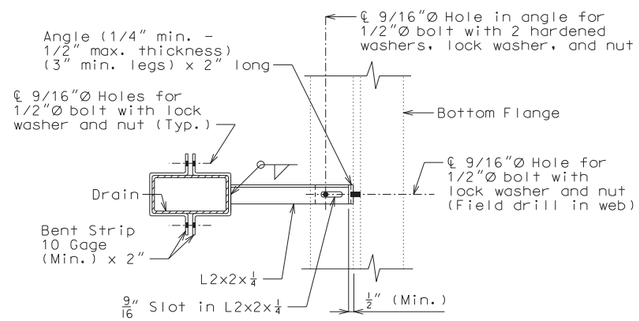

PART SECTION SHOWING BRACKET ASSEMBLY

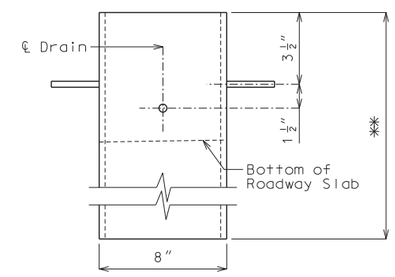

ELEVATION OF DRAIN

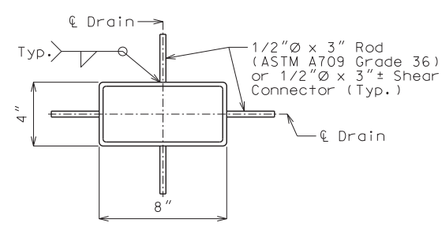

PLAN OF STEEL DRAIN OPTION

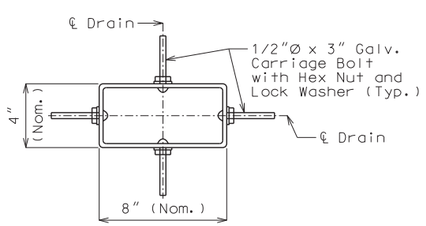

PLAN OF FRP DRAIN OPTION

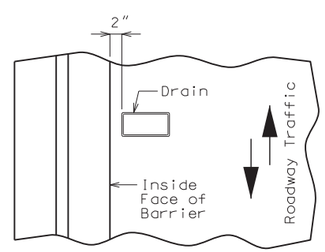

PART PLAN OF SLAB AT DRAIN

SLAB DRAINS

General Notes:

Contractor shall have the option to construct either steel or FRP slab drains. All drains shall be of same type.

Slab drain bracket assembly shall be ASTM A709 Grade 36 steel.

Locate drains in slab by dimensions shown in Part Section Near Drain.

Reinforcing steel shall be shifted to clear drains.

The bracket assembly shall be galvanized in accordance with ASTM A123.

All bolts, hardened washers, lock washers and nuts shall be galvanized in accordance with ASTM A153.

Shop drawings will not be required for the slab drains and the bracket assembly.

The bolt hole for the bracket assembly attachment shall be shifted to the minimum extent necessary to field drill in the existing web.

(1) See front sheet for slab thickness.

Notes for Steel Drain:

Slab drains may be fabricated of either 1/4" welded sheets of ASTM A709 Grade 36 steel or from 1/4" structural steel tubing ASTM A500 or A501.

Outside dimensions of drains are 8" x 4".

The drains shall be galvanized in accordance with ASTM A123.

Notes for FRP Drain:

Drains shall be machine filament-wound thermosetting resin tubing meeting the requirements of ASTM D2996 with the following exceptions:

Shape of drains shall be rectangular with outside nominal dimensions of 8" x 4".

Minimum reinforced wall thickness shall be 1/4 inch.

The resin used shall be ultraviolet (UV) resistant and/or have UV inhibitors mixed throughout. Drains may have an exterior coating for additional UV resistance.

The color of the slab drain shall be gray (Federal Standard 26373). The color shall be uniform throughout the resin and any coating used.

The combination of materials used in the manufacture of the drains shall be tested for UV resistance in accordance with ASTM D4329 Cycle A. The representative material shall withstand at least 500 hours of testing with only minor discoloration and without any physical deterioration. The contractor shall furnish the results of the required ultraviolet testing prior to acceptance of the slab drains.

At the contractor's option, drains may be field cut. The method of cutting FRP slab drain shall be recommended by the manufacturer to ensure a smooth, chip free cut.

STATE OF MISSOURI
WESLEY A. O'NEAL
NUMBER PE-2018021231
PROFESSIONAL ENGINEER
"THIS SHEET HAS BEEN SIGNED, SEALED AND DATED ELECTRONICALLY.

DATE PREPARED	
7/1/2020	
ROUTE: BB	STATE: MO
DISTRICT: BR	SHEET NO.: 3
COUNTY: MERCER	
JOB NO.: J1S3161	
CONTRACT ID.: .	
PROJECT NO.: .	
BRIDGE NO.: N08552	

DATE	DESCRIPTION
.	.
.	.
.	.
.	.
.	.
.	.

IF A SEAL IS PRESENT ON THIS SHEET IT HAS BEEN ELECTRONICALLY SEALED AND DATED.

MISSOURI HIGHWAYS AND TRANSPORTATION COMMISSION
105 WEST CAPITOL
JEFFERSON CITY, MO 65102
1-888-ASK-MODOT (1-888-275-6636)

WILSON & COMPANY
ENGINEERS & ARCHITECTS
800 E 101st Terr., Ste. 200
Kansas City, MO 64131
Phone (816) 701-3100
Fax (816) 942-3013
Missouri Cert. of Authority #2003007599

Detailed May 2020
Checked June 2020

Note: This drawing is not to scale. Follow dimensions.

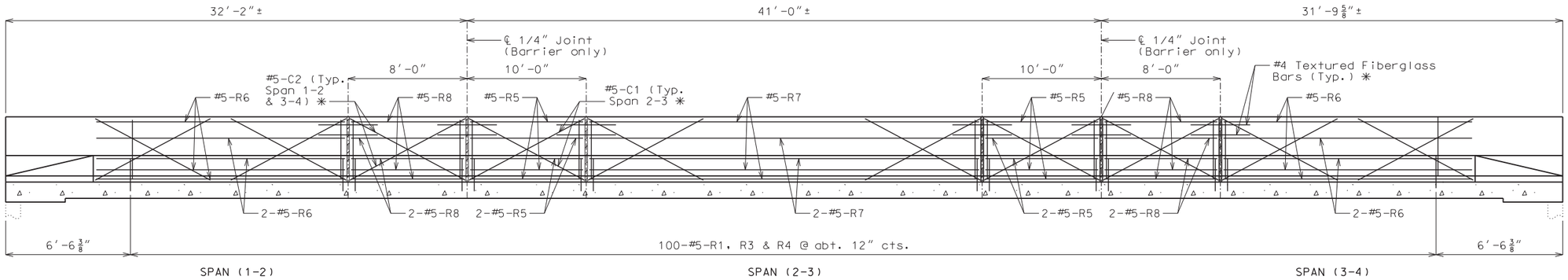

ELEVATION OF BARRIER

(Left barrier shown, right barrier similar)
Longitudinal dimensions are horizontal.

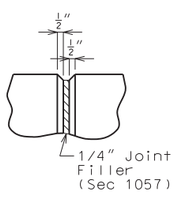

PART ELEVATION AT FORMED JOINT

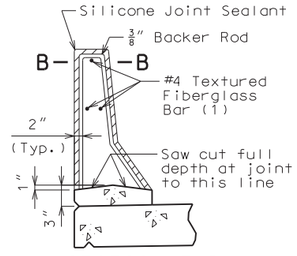

SECTION THRU SAW CUT JOINT

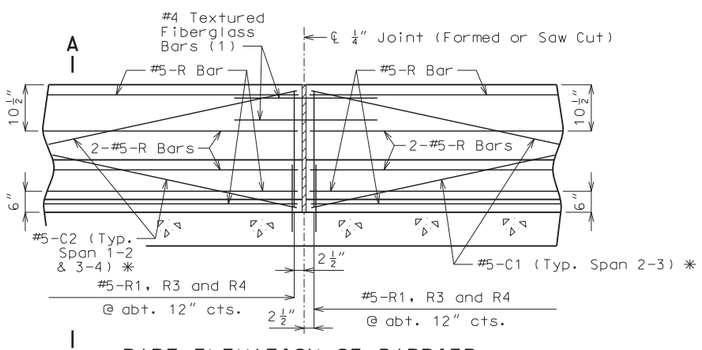

PART ELEVATION OF BARRIER

(1) Four feet long, centered on joint, slip-formed option only

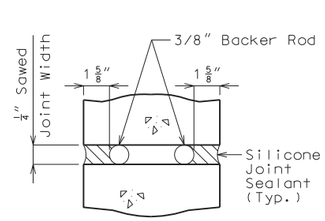

SECTION B-B

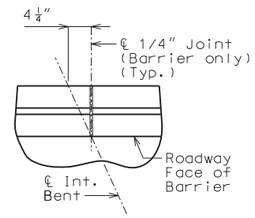

PART PLAN SHOWING JOINT LOCATION

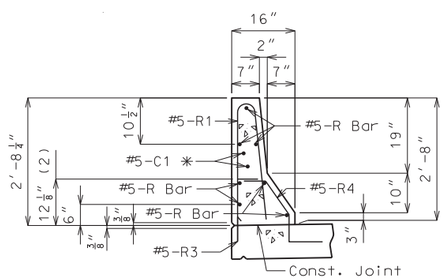

SECTION A-A

Use a minimum lap of 3′-1″ for #5 horizontal barrier bars.

The cross-sectional area above the slab is 2.27 square feet.

(2) To top of bar

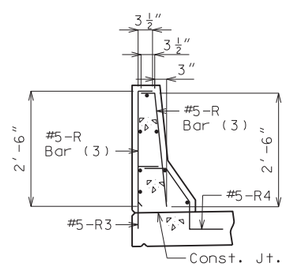

R-BAR PERMISSIBLE ALTERNATE SHAPE

(3) The R1 bar may be separated into two bars as shown, at the contractor's option, only when slip forming is not used. (All dimensions are out to out.)

General Notes:

✳ Slip-formed option only.

Conventional forming or slip forming may be used. Saw cut joints may be used with conventional forming.

Top of barrier shall be built parallel to grade with barrier joints normal to grade.

All exposed edges of barrier shall have either a 1/2-inch radius or a 3/8-inch bevel, unless otherwise noted.

Payment for all concrete and reinforcement, complete in place, will be considered completely covered by the contract unit price for Type B Barrier per linear foot.

Concrete in the barrier shall be Class B-1.

Measurement of barrier is to the nearest linear foot for each structure, measured along the outside top of slab from end of slab to end of slab.

Concrete traffic barrier delineators shall be placed on top of the barrier as shown on Missouri Standard Plan 617.10 and in accordance with Sec 617. Delineators on bridges with two-lane, two-way traffic shall have retroreflective sheeting on both sides. Concrete traffic barrier delineators will be considered completely covered by the contract unit price for Type B Barrier.

Joint sealant and backer rods shall be in accordance with Sec 717 for silicone joint sealant for saw cut and formed joints.

For slip-formed option, both sides of barrier shall have a vertically broomed finish and the top shall have a transversely broomed finish.

TYPE B BARRIER

Detailed May 2020
Checked June 2020

Note: This drawing is not to scale. Follow dimensions.

STATE OF MISSOURI
WESLEY A O'NEAL
NUMBER PE-2018021231
PROFESSIONAL ENGINEER
"THIS SHEET HAS BEEN SIGNED, SEALED AND DATED ELECTRONICALLY.

DATE PREPARED	
7/1/2020	
ROUTE BB	STATE MO
DISTRICT BR	SHEET NO. 4
COUNTY MERCER	
JOB NO. J1S3161	
CONTRACT ID. .	
PROJECT NO. .	
BRIDGE NO. N08552	

DATE	DESCRIPTION
.	.
.	.
.	.
.	.
.	.
.	.

IF A SEAL IS PRESENT ON THIS SHEET IT HAS BEEN ELECTRONICALLY SEALED AND DATED.

MISSOURI HIGHWAYS AND TRANSPORTATION COMMISSION
105 WEST CAPITOL
JEFFERSON CITY, MO 65102
1-888-ASK-MODOT (1-888-275-6636)

WILSON & COMPANY
ENGINEERS & ARCHITECTS
800 E 101st Terr., Ste. 200
Kansas City, MO 64131
Phone (816) 701-3100
Fax (816) 942-3013
Missouri Cert. of Authority #2003007599

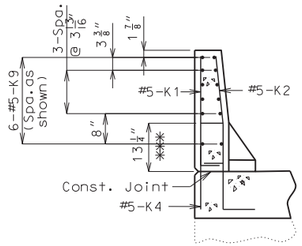

SECTION A-A

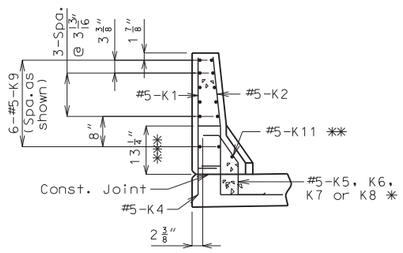

SECTION B-B

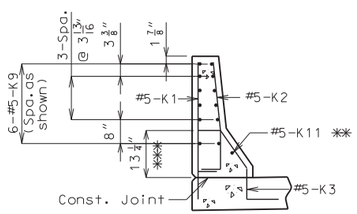

SECTION C-C

(#5-R6 Bars not shown for clarity)

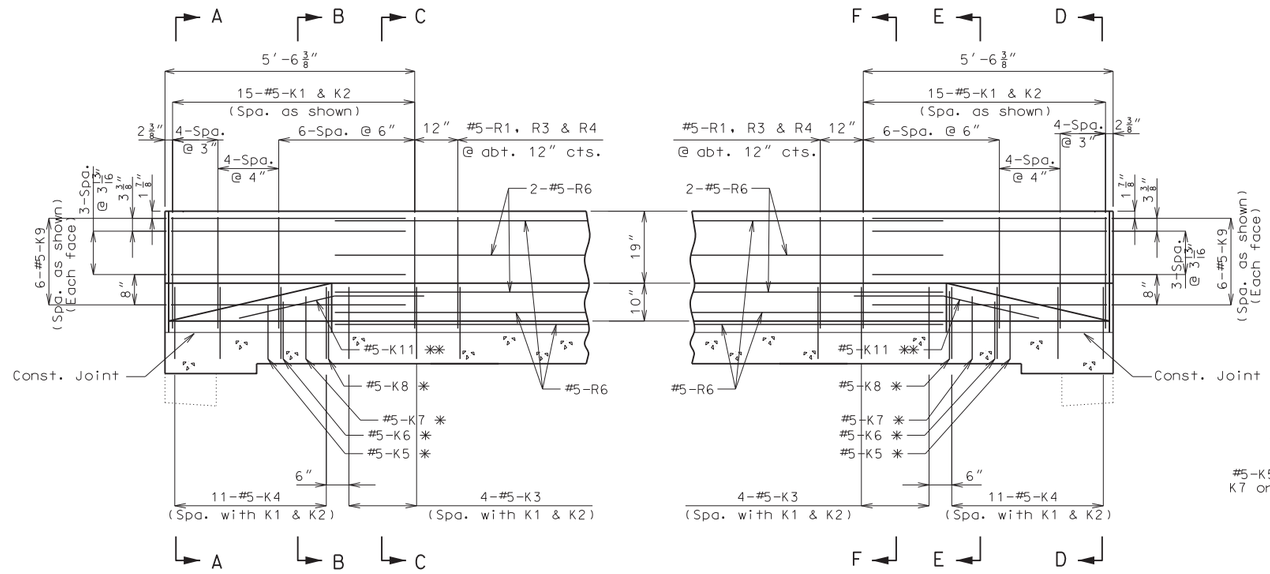

ELEVATION

ELEVATION

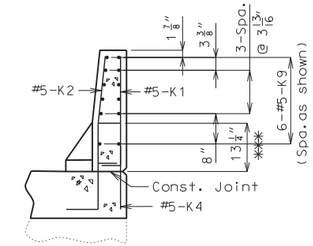

SECTION D-D

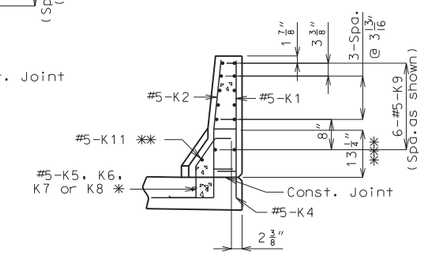

SECTION E-E

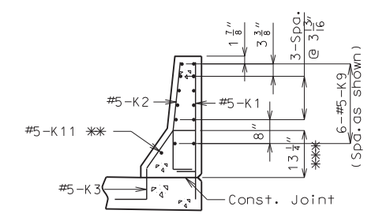

SECTION F-F

(#5-R6 Bars not shown for clarity)

* Spaced with #5-K4 bars with bottom leg at same elevation as the bottom leg of K4 bars.

** Fit bar to follow transition face of barrier.

*** To top of bar

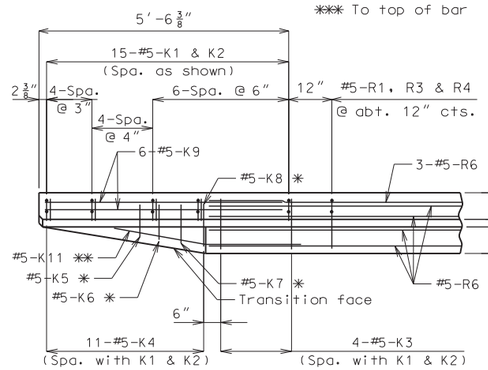

PLAN

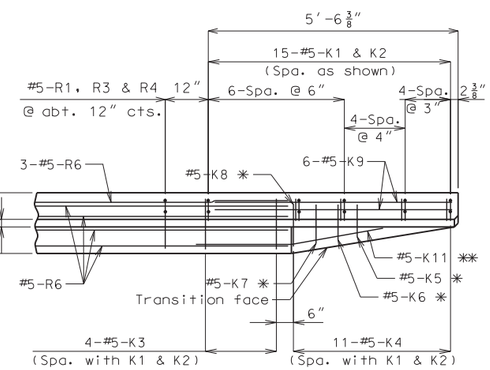

PLAN

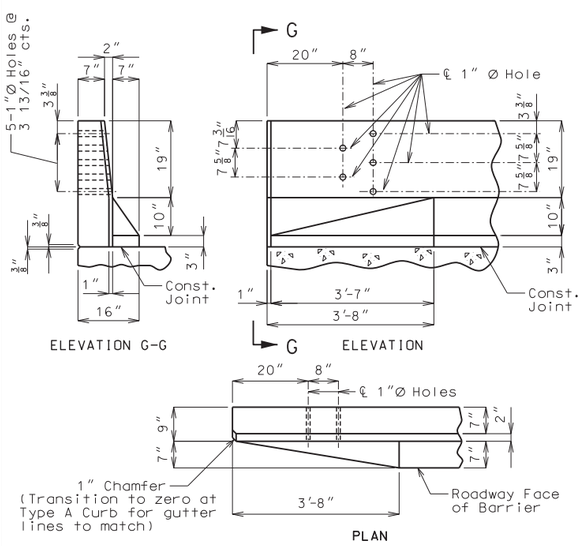

DETAILS OF GUARD RAIL ATTACHMENT

Notes: Use a minimum lap of 3'-1" between K9 and R6 bars.

Concrete traffic barrier delineators shall be placed on top of the barrier as shown on Missouri Standard Plan 617.10 and in accordance with Sec 617. Delineators on bridges with two-lane, two-way traffic shall have retroreflective sheeting on both sides. Concrete traffic barrier delineators will be considered completely covered by the contract unit price for Type B Barrier.

TYPE B BARRIER AT END BENTS

(Left barrier shown, right barrier similar)

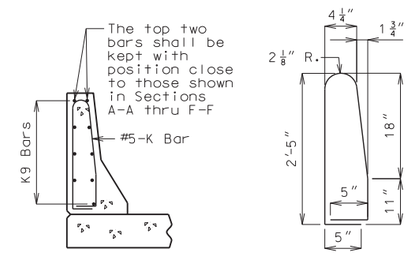

K1-K2 BAR PERMISSIBLE ALTERNATE SHAPE

(K3 or K4 thru K8 bars not shown for clarity)

The K1-K2 bar combination may be furnished as one bar as shown, at the contractor's option.

Detailed May 2020
Checked June 2020

Note: This drawing is not to scale. Follow dimensions.

STATE OF MISSOURI
WESLEY A. O'NEAL
NUMBER PE-2018021231
PROFESSIONAL ENGINEER
"THIS SHEET HAS BEEN SIGNED, SEALED AND DATED ELECTRONICALLY.

DATE PREPARED	
7/1/2020	
ROUTE BB	STATE MO
DISTRICT BR	SHEET NO. 5
COUNTY MERCER	
JOB NO. J1S3161	
CONTRACT ID. .	
PROJECT NO. .	
BRIDGE NO. N08552	

DATE	DESCRIPTION
.	.
.	.
.	.
.	.
.	.
.	.

IF A SEAL IS PRESENT ON THIS SHEET IT HAS BEEN ELECTRONICALLY SEALED AND DATED.

MISSOURI HIGHWAYS AND TRANSPORTATION COMMISSION
105 WEST CAPITOL
JEFFERSON CITY, MO 65102
1-888-ASK-MODOT (1-888-275-6636)

WILSON & COMPANY
ENGINEERS & ARCHITECTS
800 E 101st Terr., Ste. 200
Kansas City, MO 64131
Phone (816) 701-3100
Fax (816) 942-3013
Missouri Cert. of Authority #2003007599

BILL OF REINFORCING STEEL

NO. REQ'D.	MARK NO. SIZE	MARK NO. MARK	LOCATION	EPOXY (E)	SHAPE NO.	STIRRUP (S)	SUBSTR. (X)	VARIES (V)	NO. EACH	B FT.	B IN.	C FT.	C IN.	D FT.	D IN.	E FT.	E IN.	F FT.	F IN.	H FT.	H IN.	K FT.	K IN.	NOMINAL LENGTH FT.	NOMINAL LENGTH IN.	ACTUAL LENGTH FT.	ACTUAL LENGTH IN.	WEIGHT LBS.
			SLAB																									
106	5	S1	SLAB	E	20					54	2.000													54	2	54	2	5989
76	6	S2	SLAB	E	20					10	0.000													10	0	10	0	1142
216	6	S3	SLAB	E	20					24	5.000													24	5	24	5	7922
183	5	S4	SLAB	E	20					24	5.000													24	5	24	5	4660
20	6	S5	SLAB	E	20			V	2	2	6.000													2	6	2	6	
			INCREMENT =							22	2.000													22	2	22	2	370
			26.250 INCH																									
24	5	S6	SLAB	E	20			V	2	1	9.000													1	9	1	9	
			INCREMENT =							22	3.000													22	3	22	3	300
			22.375 INCH																									
			BARRIER CURB																									
60	5	K1	BARRIER CURB	E	19	S				2	5.000	5.125												2	10	2	9	172
60	5	K2	BARRIER CURB	E	14	S					5.125	11.125		18.000						2.000		17.875		2	10	2	9	172
16	5	K3	BARRIER CURB	E	27	S					16.625	5.125		12.000		7.125		12.000		9.875		6.875		4	5	4	2	70
44	5	K4	BARRIER CURB	E	10	S					12.000	16.625		6.000										4	3	3	11	180
4	5	K5	BARRIER CURB	E	27	S						4.375		6.750		7.125		12.000		5.500		4.000		2	6	2	4	10
4	5	K6	BARRIER CURB	E	27	S						4.375		7.875		7.125		12.000		6.500		4.500		2	7	2	5	10
4	5	K7	BARRIER CURB	E	27	S						4.375		9.625		7.125		12.000		7.875		5.500		2	9	2	7	11
4	5	K8	BARRIER CURB	E	27	S						4.375		11.250		7.125		12.000		9.250		6.500		2	11	2	9	11
48	5	K9	BARRIER CURB	E	20					6	9.000													6	9	6	9	338
4	5	K11	BARRIER CURB	E	8					2	2.125									2	2.000	2.375		4	4	4	4	18
200	5	R1	BARRIER CURB	E	26					2	6.000	4.250	2	6.125						2	6.000	3.000		5	3	5	2	1078
200	5	R3	BARRIER CURB	E	19	S					15.375	6.000												0	21	0	20	348
200	5	R4	BARRIER CURB	E	27	S						6.000		11.250		6.500		12.000		9.250		6.375		3	0	2	10	591
28	5	R5	BARRIER CURB	E	20					9	9.000													9	9	9	9	285
28	5	R6	BARRIER CURB	E	20					20	3.000													20	3	20	3	591
14	5	R7	BARRIER CURB	E	20					20	8.000													20	8	20	8	302
28	5	R8	BARRIER CURB	E	20					7	9.000													7	9	7	9	226
			SLIP FORM																									
			BARRIER CURB																									
16	5	C1	SLIP FORM	E	20					10	0.000													10	0	10	0	167
24	5	C2	SLIP FORM	E	20					8	0.000													8	0	8	0	200
			TOTALS																									
	5			E																								15779
	6			E																								9434
			TOTAL																									0
			TOTAL	E																								25163
			Slab on																									
			Girder																									
	5			E																								10949
	6			E																								9434
			TOTAL																									20383
			Safety																									
			Barrier																									

BILL OF REINFORCING STEEL

NO. REQ'D.	MARK NO. SIZE	MARK NO. MARK	LOCATION	EPOXY (E)	SHAPE NO.	STIRRUP (S)	SUBSTR. (X)	VARIES (V)	NO. EACH	B FT.	B IN.	C FT.	C IN.	D FT.	D IN.	E FT.	E IN.	F FT.	F IN.	H FT.	H IN.	K FT.	K IN.	NOMINAL LENGTH FT.	NOMINAL LENGTH IN.	ACTUAL LENGTH FT.	ACTUAL LENGTH IN.	WEIGHT LBS.
			Curb																									
	5			E																								4413
			TOTAL																									
			Slip Form																									
			Option																									
	5			E																								367
			TOTAL																									

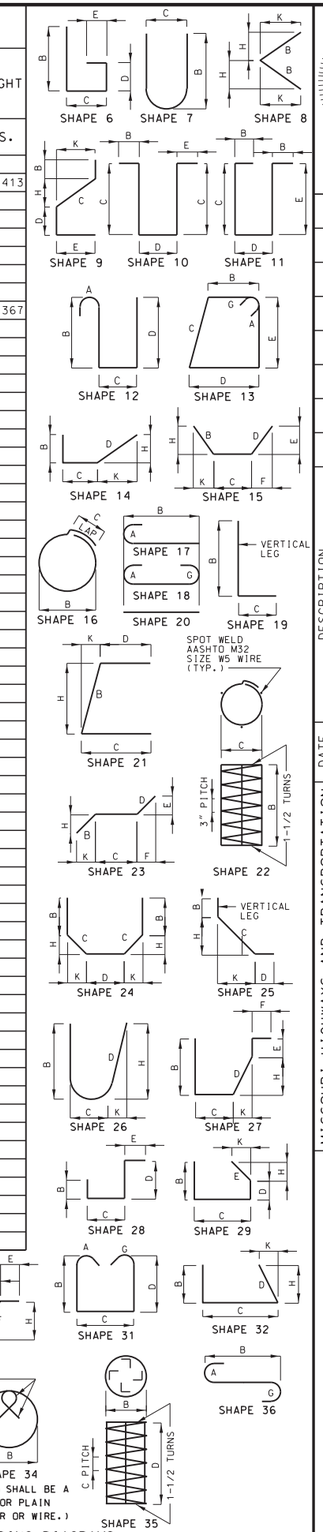

BENDING DIAGRAMS

STATE OF MISSOURI
WESLEY A O'NEAL
NUMBER PE-2018021231
PROFESSIONAL ENGINEER
"THIS SHEET HAS BEEN SIGNED, SEALED AND DATED ELECTRONICALLY.

DATE PREPARED 7/1/2020

ROUTE	STATE
BB	MO
DISTRICT	SHEET NO.
BR	6

COUNTY: MERCER
JOB NO.: J1S3161
CONTRACT ID.: .
PROJECT NO.: .
BRIDGE NO.: N08552

DATE	DESCRIPTION
.	.

IF A SEAL IS PRESENT ON THIS SHEET IT HAS BEEN ELECTRONICALLY SEALED AND DATED.

MISSOURI HIGHWAYS AND TRANSPORTATION COMMISSION
105 WEST CAPITOL
JEFFERSON CITY, MO 65102
1-888-ASK-MODOT (1-888-275-6636)

WILSON & COMPANY
ENGINEERS & ARCHITECTS
800 E 101st Terr., Ste. 200
Kansas City, MO 64131
Phone (816) 701-3100
Fax (816) 942-3013
Missouri Cert. of Authority #2003007599

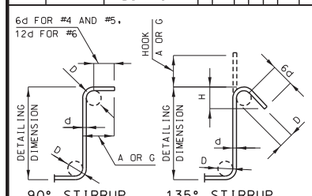

STIRRUP HOOK DIMENSIONS				
GRADES 40 - 50 - 60 KSI				
BAR SIZE	D (IN.)	90° HOOK	135° HOOK	
		HOOK A OR G	HOOK A OR G	APPROX. H
#4	2"	4 1/2"	4 1/2"	3"
#5	2 1/2"	6"	5 1/2"	3 3/4"
#6	4 1/2"	12"	8"	4 1/2"

NOTE: UNLESS OTHERWISE NOTED, DIAMETER "D" IS THE SAME FOR ALL BENDS AND HOOKS ON A BAR.

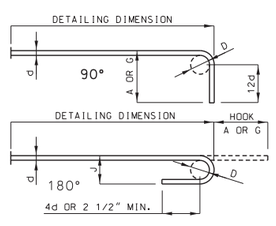

END HOOK DIMENSIONS				
BAR SIZE	D (IN.)	ALL GRADES		
		180° HOOKS		90° HOOKS
		A OR G	J	A OR G
#3	2 1/4"	5"	3"	6"
#4	3"	6"	4"	8"
#5	3 3/4"	7"	5"	10"
#6	4 1/2"	8"	6"	12"
#7	5 1/4"	10"	7"	14"
#8	6"	11"	8"	16"
#9	9 1/2"	15"	11 3/4"	19"
#10	10 3/4"	17"	13 1/4"	22"
#11	12"	19"	14 3/4"	2'-0"
#14	18 1/4"	2'-3"	21 3/4"	2'-7"

NOTE:

ALL STANDARD HOOKS AND BENDS OTHER THAN 180 DEGREE ARE TO BE BENT WITH SAME PROCEDURE AS FOR 90 DEGREE STANDARD HOOKS.

HOOKS AND BENDS SHALL BE IN ACCORDANCE WITH THE PROCEDURES AS SHOWN ON THIS SHEET.

E = EPOXY COATED REINFORCEMENT.
S = STIRRUP.
X = BAR IS INCLUDED IN SUBSTRUCTURE QUANTITIES.
V = BAR DIMENSIONS VARY IN EQUAL INCREMENTS BETWEEN DIMENSIONS SHOWN ON THIS LINE AND THE FOLLOWING LINE.
NO. EA. = NUMBER OF BARS OF EACH LENGTH.

NOMINAL LENGTHS ARE BASED ON OUT TO OUT DIMENSIONS SHOWN IN BENDING DIAGRAMS AND ARE LISTED FOR FABRICATORS USE. (NEAREST INCH)

ACTUAL LENGTHS ARE MEASURED ALONG CENTERLINE BAR TO THE NEAREST INCH.

PAYWEIGHTS ARE BASED ON ACTUAL LENGTHS.

FOUR ANGLE OR CHANNEL SPACERS ARE REQUIRED FOR EACH COLUMN SPIRAL. SPACERS ARE TO BE PLACED ON INSIDE OF SPIRALS. LENGTH AND WEIGHT OF COLUMN SPIRALS DO NOT INCLUDE SPLICES OR SPACERS.

REINFORCING STEEL (GRADE 60) FY = 60,000 PSI.

Detailed May 2020
Checked June 2020

Note: This drawing is not to scale. Follow dimensions.

MISSOURI HIGHWAYS AND TRANSPORTATION COMMISSION
PLANS FOR PROPOSED
STATE HIGHWAY

PUTNAM COUNTY

DESIGN DESIGNATION

A.A.D.T. - 2021 = 298
A.A.D.T. - 2041 = 329
D.H.V. = 10.6%
T = 24%
V = 55 M.P.H.

FUNCTIONAL CLASSIFICATION - MINOR COLLECTOR

NO RIGHT OF WAY ACQUISITION

THE EXISTENCE AND APPROXIMATE LOCATION OF UTILITY FACILITIES KNOWN TO EXIST, AS SHOWN ON THE PLANS, ARE BASED ON THE BEST INFORMATION AVAILABLE TO THE COMMISSION AT THIS TIME. THIS INFORMATION IS PROVIDED BY THE COMMISSION "AS-IS" AND THE COMMISSION EXPRESSLY DISCLAIMS ANY REPRESENTATION OR WARRANTY AS TO THE COMPLETENESS, ACCURACY, OR SUITABILITY OF THE INFORMATION FOR ANY USE. RELIANCE UPON THIS INFORMATION IS DONE AT THE RISK AND PERIL OF THE USER, AND THE COMMISSION SHALL NOT BE LIABLE FOR ANY DAMAGES THAT MAY ARISE FROM ANY ERROR IN THE INFORMATION. IT IS, THEREFORE, THE RESPONSIBILITY OF THE CONTRACTOR TO VERIFY THE EXISTENCE, LOCATION AND STATUS OF ANY FACILITY. SUCH VERIFICATION INCLUDES DIRECT CONTACT WITH THE LISTED UTILITIES.

CONVENTIONAL SYMBOLS
(USED IN PLANS)

	EXISTING	NEW
BUILDINGS AND STRUCTURES		
GUARD RAIL		
GUARD CABLE		
CONCRETE RIGHT-OF-WAY MARKER		
STEEL RIGHT-OF-WAY MARKER		
LOCATION SURVEY MARKER		
UTILITIES		
FIBER OPTICS	-FO-	~~FO~~
OVERHEAD CABLE TV	-OTV-	~~OTV~~
UNDERGROUND CABLE TV	-UTV-	~~UTV~~
OVERHEAD TELEPHONE	-OT-	~~OT~~
UNDERGROUND TELEPHONE	-UT-	~~UT~~
OVERHEAD POWER	-OE-	~~OE~~
UNDERGROUND POWER	-UE-	~~UE~~
SANITARY SEWER	-S-	~~S~~
STORM SEWER	-SS-	~~SS~~
GAS	-G-	~~G~~
WATER	-W-	~~W~~
MANHOLE	SAN	
FIRE HYDRANT	HYD	
WATER VALVE	WV	
WATER METER	WM	
DROP INLET	DI	
DITCH BLOCK		
GROUND MOUNTED SIGN	SIGN	
LIGHT POLE		
H-FRAME POWER POLE		
TELEPHONE PEDESTAL	PED	
FENCE		
CHAIN LINK	-V-	
WOVEN WIRE	-X-	
GATE POST		
BENCHMARK	BM	

NOTE: DASHED OR OPEN SYMBOLS INDICATE EXISTING FEATURES

NORTHWEST DISTRICT
PUTNAM COUNTY

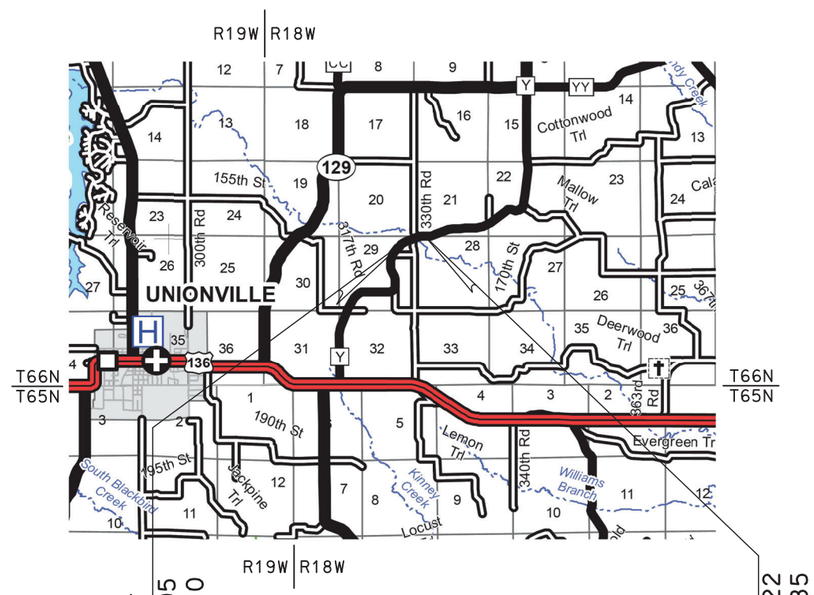

BEGIN PROJECT
STA. 138+15.05
LOG MILE 3.240

END PROJECT
STA. 141+04.22
LOG MILE 3.185

JOB NO. J1S3163
RE-DECK BRIDGE P0834
PROJECT LENGTH = 0.055 MILES

1/2 0 1 2
SCALE IN MILES

INDEX OF SHEETS

DESCRIPTION	SHEET NUMBER
TITLE SHEET	1
TYPICAL SECTIONS (TS) (1 SHEET)	2
QUANTITIES (QU) (2 SHEETS)	3
PLAN-PROFILE (PP)	4
SPECIAL SHEETS (SS)	5-6
TRAFFIC CONTROL SHEETS (TC)	7
EROSION CONTROL SHEETS (EC)	8
BRIDGE DRAWINGS (B)	
P0834	1-11

LENGTH OF PROJECT

BEGINNING OF PROJECT	STA.	138+15.05	
END OF PROJECT	STA.	141+04.22	
APPARENT LENGTH		289.17	FEET
EQUATIONS AND EXCEPTIONS:			
TOTAL CORRECTIONS		0.00	FEET
NET LENGTH OF PROJECT		289.17	FEET
STATE LENGTH		0.055	MILES
FOR INFORMATION ONLY ESTIMATED DISTURBED ACRES		0.5	ACRES

STATE OF MISSOURI
JOYCE M. REYNOLDS
NUMBER
PE-2002016722
PROFESSIONAL ENGINEER
THIS SHEET HAS BEEN SIGNED, SEALED AND DATED ELECTRONICALLY.

DATE PREPARED	
7/31/2020	
ROUTE: Y	STATE: MO
DISTRICT: NW	SHEET NO.: 1
COUNTY: PUTNAM	
JOB NO.: J1S3163	
CONTRACT ID.	
PROJECT NO.	
BRIDGE NO.	

DATE	DESCRIPTION

IF A SEAL IS PRESENT ON THIS SHEET IT HAS BEEN ELECTRONICALLY SEALED AND DATED.

MISSOURI HIGHWAYS AND TRANSPORTATION COMMISSION
105 WEST CAPITOL
JEFFERSON CITY, MO 65102
1-888-ASK-MODOT (1-888-275-6636)

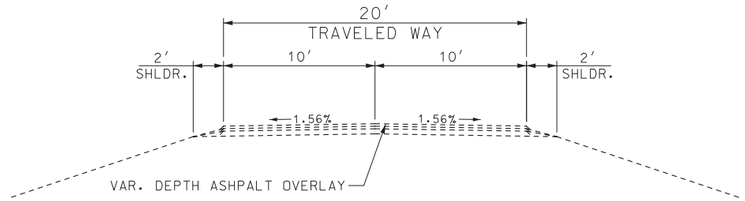

EXISTING TYPICAL SECTION

ROUTE Y

STA. 138+15.05 TO STA. 138+83.00
STA. 140+36.27 TO STA. 141+04.22

ESTIMATE FACTORS ✳	
ITEM	RATE
BITUMINOUS PAVEMENT BP-1 (PG 64-22)	1.98 TONS/YD.^{3}
BITUMINOUS BASE (PG 64-22)	1.95 TONS/YD.^{3}
TACK COAT (MILLED SURFACE)	0.10 GAL./YD.^{2}
TACK COAT (NEW ASPHALT SURFACE)	0.05 GAL./YD.^{2}
✳ FOR INFORMATION PURPOSES ONLY	

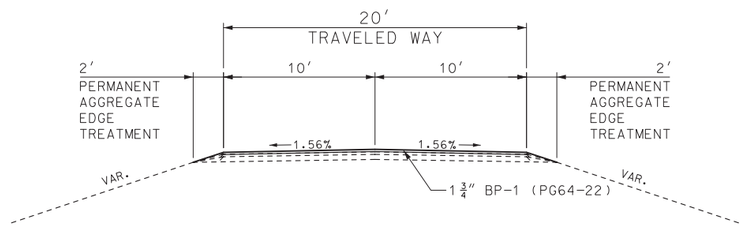

PROPOSED TYPICAL SECTION

ROUTE Y

STA. 138+15.05 TO STA. 138+65.05
STA. 140+54.22 TO STA. 141+04.22

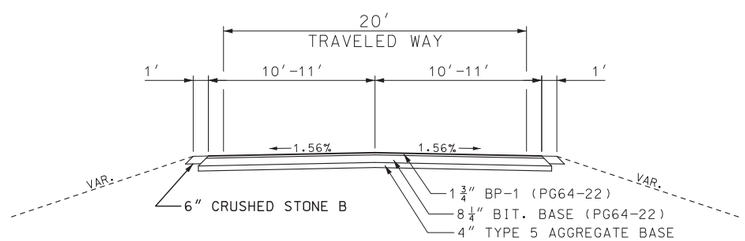

PROPOSED TYPICAL SECTION

ROUTE Y

STA. 138+65.05 TO STA. 138+83.00
STA. 140+36.27 TO STA. 140+54.22

NOT TO SCALE

STATE OF MISSOURI
JOYCE M. REYNOLDS
NUMBER
PE-2002016722
PROFESSIONAL ENGINEER

THIS SHEET HAS BEEN SIGNED, SEALED AND DATED ELECTRONICALLY.

DATE PREPARED
7/31/2020

ROUTE	STATE
Y	MO
DISTRICT	SHEET NO.
NW	2

COUNTY
PUTNAM

JOB NO.
J1S3163

CONTRACT ID.

PROJECT NO.

BRIDGE NO.

DATE	DESCRIPTION

MISSOURI HIGHWAYS AND TRANSPORTATION COMMISSION

105 WEST CAPITOL
JEFFERSON CITY, MO 65102
1-888-ASK-MODOT (1-888-275-6636)

IF A SEAL IS PRESENT ON THIS SHEET IT HAS BEEN ELECTRONICALLY SEALED AND DATED.

TYPICAL SECTIONS

SHEET 1 OF 1

REMOVAL OF IMPROVEMENTS

STATION	STATION	LOCATION	DESCRIPTION	REMOVALS S.Y.	REMOVALS EACH	REMARKS
138+65.05	138+83.00	ROUTE Y	APPROACH PAVEMENT	43.9		
138+83.00	139+03.00	ROUTE Y	BRIDGE APPROACH SLAB	48.9		
140+16.27	140+36.27	ROUTE Y	BRIDGE APPROACH SLAB	48.9		
140+36.27	140+54.22	ROUTE Y	APPROACH PAVEMENT	43.9		
138+60.05	139+00.05	ROUTE Y LT.	TYPE III OBJECT MARKERS		3	
138+65.95	139+05.95	ROUTE Y RT.	TYPE III OBJECT MARKERS		3	
140+13.32	140+53.32	ROUTE Y LT.	TYPE III OBJECT MARKERS		3	
140+19.22	140+59.22	ROUTE Y RT.	TYPE III OBJECT MARKERS		3	
			SUBTOTAL	185.6	12	
			TOTAL	LUMP SUM = 1		

PAVEMENT SUMMARY

STATION	STATION	LOCATION	LENGTH FT.	WIDTH FT.	1.75" BP-1 PG64-22 TONS	8.25" BIT. BASE PG64-22 TONS	4" TYPE 1 AGGREGATE BASE S.Y.	TACK COAT GAL.
138+15.05	138+65.05	ROUTE Y	50.00	20	10.69			11.1
138+65.05	138+83.00	ROUTE Y	17.95	22	4.22	19.61	43.9	8.8
140+36.27	140+54.22	ROUTE Y	17.95	22	4.22	19.61	43.9	8.8
140+54.22	141+04.22	ROUTE Y	50.00	20	10.69			11.1
				SUBTOTAL	29.82	39.22	87.8	39.8
				TOTAL	29.8	39.2	88	40

MODIFIED COLDMILLING

STATION	STATION	LOCATION	MODIFIED COLDMILLING (DEPTH TRANSITION) S.Y.	REMARKS
138+15.05	138+65.05	ROUTE Y	116.8	
140+54.22	141+04.22	ROUTE Y	116.8	
		SUBTOTAL	233.6	
		TOTAL	234	

PAVEMENT MARKING

STATION	STATION	LOCATION	4" YELLOW STANDARD WATERBORNE PAVEMENT MARKING PAINT, TYPE P BEADS L.F.	REMARKS
138+15.00	141+04.22	ROUTE Y	578.4	DOUBLE YELLOW
		SUBTOTAL	578.4	
		TOTAL	578	

TYPE 2 ROCK BLANKET

STATION	STATION	LOCATION	FURNISHING TYPE 2 ROCK BLANKET C.Y.	PLACING TYPE 2 ROCK BLANKET C.Y.	PERMANENT EROSION CONTROL GEOTEXTILE S.Y.
139+07.58	139+39.07	ROUTE Y	179.5	179.5	269.3
139+73.51	140+11.69	ROUTE Y	193.1	193.1	289.7
		SUBTOTAL	372.6	372.6	559.0
		TOTAL	373	373	559

EROSION CONTROL

STATION	STATION	LOCATION	SILT FENCE L.F.	SEDIMENT REMOVAL C.Y.
138+29.12	139+19.02	RTE. Y.	220.1	2.2
140+03.80	140+78.85	RTE. Y.	230.5	2.3
		SUBTOTAL	450.6	4.5
		TOTAL	451	5

BACKFILL

STATION	STATION	LOCATION	LENGTH FT.	GRANULAR BACKFILL C.Y.	FLOWABLE BACKFILL C.Y.	REMARKS
138+83.00	139+03.00	ROUTE Y	20	7.41		FILL BEHIND END BENT
140+16.27	140+36.27	ROUTE Y	20	7.41		FILL BEHIND END BENT
139+03.00	139+08.00	ROUTE Y	5		3.70	VOID REPAIR ON BENT 1
			SUBTOTAL	14.82	3.70	
			TOTAL	15	4	

PERMANENT AGGREGATE EDGE TREATMENT

STATION	STATION	LOCATION	LENGTH FT.	WIDTH FT.	EDGE DROP OFF IN	PERMANENT AGGREGATE EDGE TREATMENT TONS
138+15.05	138+65.05	ROUTE Y LT.	50.00	2	2	0.86
138+15.05	138+65.05	ROUTE Y RT.	50.00	2	2	0.86
140+54.22	141+04.22	ROUTE Y LT.	50.00	2	2	0.86
140+54.22	141+04.22	ROUTE Y RT.	50.00	2	2	0.86
					SUBTOTAL	1.72
					TOTAL	1.7

SHOULDER AGGREGATE

STATION	STATION	LOCATION	LENGTH FT.	WIDTH FT.	6" CRUSHED STONE B TONS
138+65.05	138+94.55	ROUTE Y LT.	29.50	1	0.8
138+65.05	139+00.45	ROUTE Y RT.	35.40	1	0.9
140+18.82	140+54.22	ROUTE Y LT.	35.40	1	0.9
140+22.72	140+54.22	ROUTE Y RT.	31.50	1	0.8
				SUBTOTAL	3.4
				TOTAL	3

MOBILIZATION

LUMP SUM = 1

SIGN ASSEMBLIES

STATION	LOCATION	SH-FLAT SHEET ITEM NO. 9035004A TYPE 3 OBJECT MARKER LT. 12" X 36" S.F.	SH-FLAT SHEET ITEM NO. 9035004A TYPE 3 OBJECT MARKER RT. 12" X 36" S.F.	U-CHANNEL POST 3 LB. ITEM NO. 9031250A L.F.
138+60.05	RTE. Y LT.	3.0		10.5
138+65.95	RTE. Y RT.		3.0	10.5
138+80.05	RTE. Y LT.	3.0		10.5
138+85.95	RTE. Y RT.		3.0	10.5
139+00.05	RTE. Y LT.	3.0		10.5
139+05.95	RTE. Y RT.		3.0	10.5
140+13.32	RTE. Y LT.		3.0	10.5
140+19.22	RTE. Y RT.	3.0		10.5
140+33.32	RTE. Y LT.		3.0	10.5
140+39.22	RTE. Y RT.	3.0		10.5
140+53.32	RTE. Y LT.		3.0	10.5
140+59.22	RTE. Y RT.	3.0		10.5
	SUBTOTAL	18.0	18.0	126.0
	TOTAL	36.0		126

STATE OF MISSOURI
JOYCE M. REYNOLDS
NUMBER PE-2002016722
PROFESSIONAL ENGINEER

THIS SHEET HAS BEEN SIGNED, SEALED AND DATED ELECTRONICALLY.

DATE PREPARED 8/3/2020

ROUTE	STATE
Y	MO
DISTRICT	SHEET NO.
NW	3

COUNTY: PUTNAM

JOB NO. J1S3163

CONTRACT ID.

PROJECT NO.

BRIDGE NO.

DESCRIPTION	DATE

IF A SEAL IS PRESENT ON THIS SHEET IT HAS BEEN ELECTRONICALLY SEALED AND DATED.

MISSOURI HIGHWAYS AND TRANSPORTATION COMMISSION

105 WEST CAPITOL
JEFFERSON CITY, MO 65102
1-888-ASK-MODOT (1-888-275-6636)

SUMMARY OF QUANTITIES

SHEET 1 OF 2

EFFECTIVE: 10-01-2019

SIGN	SIZE IN.	AREA SQ.FT.	QTY EACH	TOTAL AREA SQ.FT.	QTY RELOC EACH	TOTAL RELOC SQ.FT.	SIGN NUM.	DESCRIPTION
WARNING SIGNS								
W01-1L	48X48	16.00						TURN (SYMBOL LEFT ARROW)
W01-1R	48X48	16.00						TURN (SYMBOL RIGHT ARROW)
W01-2L	48X48	16.00						CURVE (SYMBOL LEFT ARROW)
W01-2R	48X48	16.00						CURVE (SYMBOL RIGHT ARROW)
W01-3L	48X48	16.00						REVERSE TURN (SYMBOL LEFT ARROW)
W01-3R	48X48	16.00						REVERSE TURN (SYMBOL RIGHT ARROW)
W01-4L	48X48	16.00						REVERSE CURVE (SYMBOL LEFT ARROW)
W01-4R	48X48	16.00						REVERSE CURVE (SYMBOL RIGHT ARROW)
W01-4bL	48X48	16.00						DOUBLE ARROW REVERSE CURVE (SYMBOL LT ARROWS)
W01-4bR	48X48	16.00						DOUBLE ARROW REVERSE CURVE (SYMBOL RT ARROWS)
W01-4cL	48X48	16.00						TRIPLE ARROW REVERSE CURVE (SYMBOL LT ARROWS)
W01-4cR	48X48	16.00						TRIPLE ARROW REVERSE CURVE (SYMBOL RT ARROWS)
W01-6	60X30	12.50						HORIZONTAL ARROW (SYMBOL)
W01-6a	72X36	18.00						HORIZ. ARROW (SYMBOL ON PERMANENT BARRICADE)
W01-7	60X30	12.50						DOUBLE HEAD HORIZONTAL ARROW (SYMBOL)
W01-7a	72X36	18.00						DOUBLE HEAD HORIZ. ARROW (SYMBOL ON PERM. BARR.)
W01-8	18X24	3.00						CHEVRON (SYMBOL)
W01-8a	30X36	7.50						CHEVRON (SYMBOL FOR DIVIDED HIGHWAYS)
W03-1	48X48	16.00						STOP AHEAD (SYMBOL)
W03-2	48X48	16.00						YIELD AHEAD (SYMBOL)
W03-3	48X48	16.00						SIGNAL AHEAD (SYMBOL)
W03-4	48X48	16.00						BE PREPARED TO STOP
W03-5	48X48	16.00						SPEED LIMIT AHEAD
W04-1L	48X48	16.00						MERGE (SYMBOL FROM LEFT)
W04-1R	48X48	16.00						MERGE (SYMBOL FROM RIGHT)
W04-1aL	48X48	16.00						MERGE (ARROW SYMBOL)
W04-1aR	48X48	16.00						MERGE (ARROW SYMBOL)
W05-1	48X48	16.00						ROAD/BRIDGE/RAMP NARROWS
W05-3	48X48	16.00						ONE LANE BRIDGE
W05-5	48X48	16.00						NARROW LANES
W06-1	48X48	16.00						DIVIDED HIGHWAY (SYMBOL)
W06-2	48X48	16.00						DIVIDED HIGHWAY END (SYMBOL)
W06-3	48X48	16.00						TWO WAY TRAFFIC (SYMBOL)
W07-3a	30X24	5.00						NEXT XX MILES (PLAQUE)
W08-1	48X48	16.00						BUMP
W08-2	48X48	16.00						DIP
W08-3	48X48	16.00						PAVEMENT ENDS
W08-4	48X48	16.00						SOFT SHOULDER
W08-5	48X48	16.00						SLIPPERY WHEN WET (SYMBOL)
W08-6	48X48	16.00						TRUCK CROSSING
W08-6c	48X48	16.00						TRUCK ENTRANCE
W08-7	36X36	9.00						LOOSE GRAVEL
W08-7a	36X36	9.00						FRESH OIL/LOOSE GRAVEL
W08-9	48X48	16.00						LOW SHOULDER
W08-11	48X48	16.00						UNEVEN LANES
W08-12	48X48	16.00						NO CENTER LINE
W08-15	48X48	16.00						GROOVED PAVEMENT
W08-15P	30X24	5.00						MOTORCYCLE (PLAQUE)
W08-17	48X48	16.00						SHOULDER DROP-OFF (SYMBOL)
W08-17P	30X24	5.00						SHOULDER DROP-OFF (PLAQUE)
W10-1	42RND.	9.62						RAILROAD CROSSING
W012-1	24X24	4.00						DOUBLE DOWN ARROW (SYMBOL)
W012-2	48X48	16.00						LOW CLEARANCE (SYMBOL)
W012-2X	24X18	3.00						LOW CLEARANCE (PLAQUE)
W012-2a	84X24	14.00						OVERHEAD LOW CLEARANCE (FEET AND INCHES)
W012-4	120X60	50.00						LOW CLEARANCE XX FT XX IN XX MILES AHEAD
W012-5	120X60	50.00						WIDTH RESTRICTION XX FT XX IN XX MILES AHEAD
W013-1	30X30	6.25						ADVISORY SPEED (PLAQUE)
W016-2	30X24	5.00						XXX FEET (PLAQUE)
W016-3	30X24	5.00						X MILE (PLAQUE)
W020-1	48X48	16.00						ROAD/BRIDGE/RAMP WORK AHEAD
W020-2	48X48	16.00						DETOUR AHEAD
W020-3	48X48	16.00	2	32			20	ROAD CLOSED AHEAD
W020-4	48X48	16.00						ONE LANE ROAD AHEAD
W020-5	48X48	16.00						RIGHT/CENTER/LEFT LANE CLOSED AHEAD
W020-5a	48X48	16.00						2 RIGHT/CENTER/LEFT LANES CLOSED AHEAD
W020-6a	48X48	16.00						RIGHT/CENTER/LEFT LANE CLOSED
W020-7a	48X48	16.00						FLAGGER (SYMBOL) WITH FLAGS
W021-2	36X36	9.00						FRESH OIL
W021-5	48X48	16.00						SHOULDER WORK AHEAD
W022-1	48X48	16.00						BLASTING ZONE AHEAD
W022-2	42X36	10.50						TURN OFF 2-WAY RADIO AND PHONE
W022-3	42X36	10.50						END BLASTING ZONE
G022-1	21X15	2.19						WET PAINT (ARROW PIVOTS)

SIGN	SIZE IN.	AREA SQ.FT.	QTY EACH	TOTAL SQ.FT.	QTY RELOC EACH	TOTAL RELOC SQ.FT.	SIGN NUM.	DESCRIPTION
GUIDE SIGNS								
E05-1	36X48	12.00						GORE EXIT
E05-2	48X36	12.00						EXIT OPEN
E05-2a	48X36	12.00						EXIT CLOSED
G020-1	60X24	10.00						ROAD WORK NEXT XX MILES
G020-2	48X24	8.00						END ROAD WORK
G020-4	36X18	4.50						PILOT CAR FOLLOW ME
G020-4a	42X30	8.75						PILOT CAR IN USE WAIT & FOLLOW
G020-4a	18X12	1.50						PILOT CAR IN USE WAIT & FOLLOW
G020-5aP	36X24	6.00						WORK ZONE (PLAQUE)
M04-8a	24X18	3.00						END DETOUR
M04-9L	48X36	12.00						DETOUR (LEFT ARROW)
M04-9R	48X36	12.00						DETOUR (RIGHT ARROW)
M04-9P	48X12	4.00						STREET NAME (PLAQUE)
M04-10L	48X18	6.00						DETOUR (ARROW LEFT)
M04-10R	48X18	6.00						DETOUR (ARROW RIGHT)
REGULATORY SIGNS								
R1-1	48X48	13.25						STOP
R1-2	48TRI.	6.93						YIELD
R1-2a	36X36	9.00						TO ONCOMING TRAFFIC (PLAQUE)
R1-3P	30X12	2.50						ALL WAY (PLAQUE)
R2-1	36X48	12.00						SPEED LIMIT XX
R3-1	48X48	16.00						NO RIGHT TURN (SYMBOL)
R3-2	48X48	16.00						NO LEFT TURN (SYMBOL)
R3-3	36X36	9.00						NO TURNS
R3-4	48X48	16.00						NO U-TURN (SYMBOL)
R3-7L	30X30	6.25						LEFT LANE MUST TURN LEFT
R3-7R	30X30	6.25						RIGHT LANE MUST TURN RIGHT
R4-1	36X48	12.00						DO NOT PASS
R4-2	36X48	12.00						PASS WITH CARE
R4-8a	36X48	12.00						KEEP LEFT (HORIZONTAL ARROW)
R4-7a	36X48	12.00						KEEP RIGHT (HORIZONTAL ARROW)
R5-1	30X30	6.25						DO NOT ENTER
R5-1a	36X24	6.00						WRONG WAY
R6-1L	54X18	6.75						ONE WAY ARROW (LEFT)
R6-1R	54X18	6.75						ONE WAY ARROW (RIGHT)
R6-2L	24X30	5.00						ONE WAY (LEFT)
R6-2R	24X30	5.00						ONE WAY (RIGHT)
R9-9	24X12	2.00						SIDEWALK CLOSED
R9-11L	24X18	3.00						SIDEWALK CLOSED AHEAD, (ARROW LEFT) CROSS HERE
R9-11R	24X18	3.00						SIDEWALK CLOSED AHEAD, (ARROW RIGHT) CROSS HERE
R10-6	24X36	6.00						STOP HERE ON RED (45° ARROW)
R11-2	48X30	10.00	4	40			29	ROAD CLOSED
R11-3a	60X30	12.50	2	25			56 /56a	ROAD CLOSED XX MILES AHEAD LOCAL TRAFFIC ONLY
R11-4	60X30	12.50	2	25			57	ROAD CLOSED TO THRU TRAFFIC
CONST-3A	60X48	20.00						FINE SIGN
CONST-3X	56X12	4.67						SPEEDING/PASSING (PLATE)
MISCELLANEOUS SIGNS								
CONST-5	48X36	12.00						POINT OF PRESENCE
CONST-5	96X48	32.00						POINT OF PRESENCE
CONST-7	48X24	8.00						RATE OUR WORK ZONE
CONST-7	72X36	18.00						RATE OUR WORK ZONE
CONST-8	48X36	12.00						WORK ZONE NO PHONE ZONE
W020-3	48X48	16.00	2	32			20a	ROAD CLOSED 500 FT
CONST-5	96X48	32.00	2	64			58	POINT OF PRESENCE - FOCUS ON BRIDGES

616-10.05 CONSTRUCTION SIGNS	TOTAL	218
616-10.10 RELOCATED SIGNS	TOTAL	0

ITEM NUMBER	TOTAL QTY	DESCRIPTION
6122008		IMPACT ATTENUATOR 40 MPH (SAND BARRELS)
6122009		IMPACT ATTENUATOR 45 MPH (SAND BARRELS)
6122010		IMPACT ATTENUATOR 50 MPH (SAND BARRELS)
6122012		IMPACT ATTENUATOR 55 MPH (SAND BARRELS)
6122014		IMPACT ATTENUATOR 60 MPH (SAND BARRELS)
6122017		IMPACT ATTENUATOR 65 MPH (SAND BARRELS)
6122019		IMPACT ATTENUATOR 70 MPH (SAND BARRELS)
6122020		REPLACEMENT SAND BARREL
6122030		IMPACT ATTENUATOR (RELOCATION)
6123000A		TRUCK OR TRAILER MOUNTED ATTENUATOR (TMA)
6161007		SPEED LIMIT AND STROBE LIGHT ASSEMBLY
6161008	4	ADVANCED WARNING RAIL SYSTEM
6161009	2	FLAG ASSEMBLY
6161012		BUOYS (BOATS KEEP OUT)
6161013		BUOYS (NO WAKE)
6161014		SPECIAL SIGN ASSEMBLY (BOATS KEEP OUT)
6161024		CHANNELIZER (TRIM LINE) WITH LIGHT
6161025		CHANNELIZER (TRIM LINE)
6161030	16	TYPE III MOVEABLE BARRICADE
6161031		TYPE III MOVEABLE BARRICADE WITH LIGHTS
6161033		DIRECTION INDICATOR BARRICADE
6161034		DIRECTION INDICATOR BARRICADE, WITH LIGHT
6161040		FLASHING ARROW PANEL
6161047		TYPE III OBJECT MARKER
6161052		WARNING LIGHT, TYPE B
6161055		SEQUENTIAL FLASHING WARNING LIGHT
6161070		TUBULAR MARKER
6161095		RADAR SPEED ADVISORY SYSTEM
6161096		CHANGEABLE MESSAGE SIGN, COMMISSION FURNISHED/RETAINED
6161098A		CHANGEABLE MESSAGE SIGN W/O COMM. INTERFACE, CONTRACTOR FURNISHED/RETAINED
6161099		CHANGEABLE MESSAGE SIGN WITH COMM. INTERFACE, CONTRACTOR FURNISHED/RETAINED
6162000A		WORK ZONE TRAFFIC SIGNAL SYSTEM
6162002		TEMPORARY LONG-TERM RUMBLE STRIPS
6162004		TEMPORARY SHORT-TERM RUMBLE STRIPS
6173600D		TEMPORARY TRAFFIC BARRIER CONTRACTOR FURNISHED/RETAINED
6173602B		TEMPORARY TRAFFIC BARRIER CONTRACTOR FURNISHED/COMMISSION RETAINED
6174000A		TEMP. TRAFFIC BARRIER HEIGHT TRANSITION
6175010A		RELOCATING TEMPORARY TRAFFIC BARRIER
6176000B		TEMPORARY TRAFFIC BARRIER COMMISSION FURNISHED/RETAINED
6177000B		TEMP. TRAFFIC BARRIER HEIGHT TRANSITION COMMISSION FURNISHED/RETAINED
6208064A		TEMPORARY RAISED PAVEMENT MARKER
9029400		TEMPORARY TRAFFIC SIGNALS
9029401		TEMPORARY TRAFFIC SIGNALS AND LIGHTING

STATE OF MISSOURI
JOYCE M. REYNOLDS
NUMBER PE-2002016722
PROFESSIONAL ENGINEER

THIS SHEET HAS BEEN SIGNED, SEALED AND DATED ELECTRONICALLY.

DATE PREPARED 8/25/2020

ROUTE	STATE
Y	MO
DISTRICT	SHEET NO.
NW	3

COUNTY: PUTNAM

JOB NO. J1S3163

CONTRACT ID.

PROJECT NO.

BRIDGE NO.

DESCRIPTION	DATE

IF A SEAL IS PRESENT ON THIS SHEET IT HAS BEEN ELECTRONICALLY SEALED AND DATED.

MISSOURI HIGHWAYS AND TRANSPORTATION COMMISSION
105 WEST CAPITOL
JEFFERSON CITY, MO 65102
1-888-ASK-MODOT (1-888-275-6636)

SUMMARY OF QUANTITIES

SHEET 2 OF 2

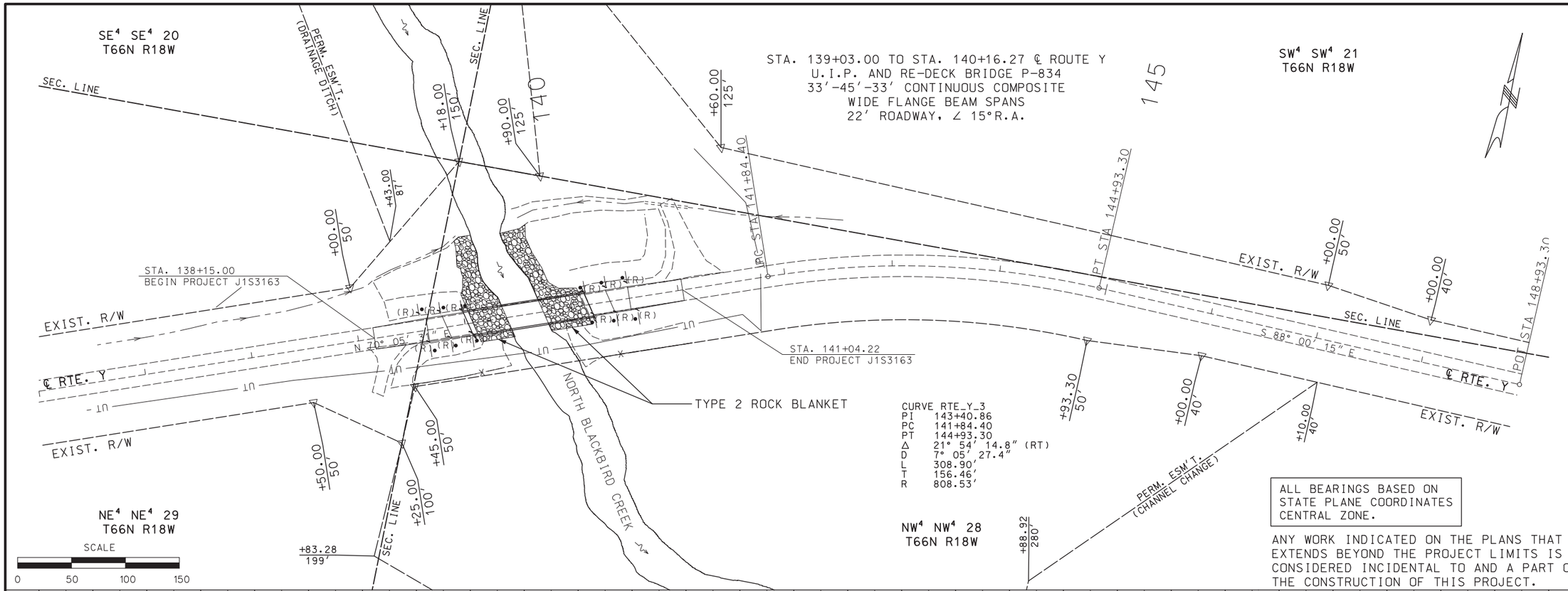

CURVE RTE_Y_3

PI	143+40.86
PC	141+84.40
PT	144+93.30
Δ	21° 54' 14.8" (RT)
D	7° 05' 27.4"
L	308.90'
T	156.46'
R	808.53'

ALL BEARINGS BASED ON STATE PLANE COORDINATES CENTRAL ZONE.

ANY WORK INDICATED ON THE PLANS THAT EXTENDS BEYOND THE PROJECT LIMITS IS CONSIDERED INCIDENTAL TO AND A PART OF THE CONSTRUCTION OF THIS PROJECT.

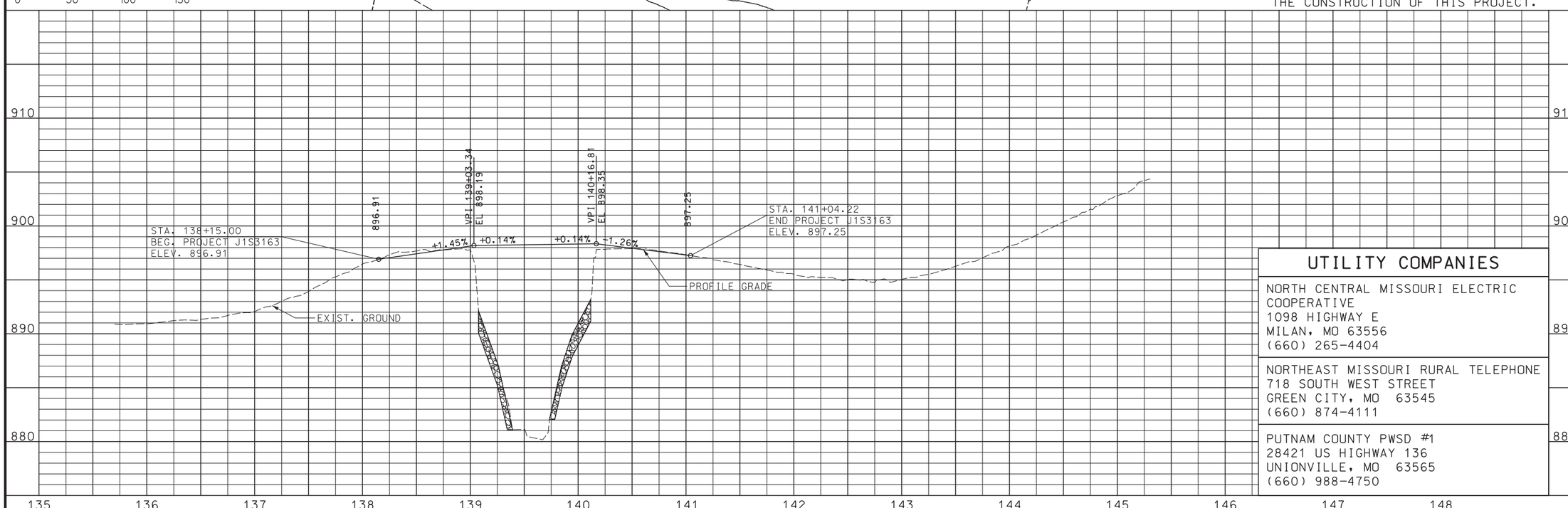

UTILITY COMPANIES

NORTH CENTRAL MISSOURI ELECTRIC COOPERATIVE
1098 HIGHWAY E
MILAN, MO 63556
(660) 265-4404

NORTHEAST MISSOURI RURAL TELEPHONE
718 SOUTH WEST STREET
GREEN CITY, MO 63545
(660) 874-4111

PUTNAM COUNTY PWSD #1
28421 US HIGHWAY 136
UNIONVILLE, MO 63565
(660) 988-4750

STATE OF MISSOURI
JOYCE M. REYNOLDS
NUMBER PE-2002016722
PROFESSIONAL ENGINEER

THIS SHEET HAS BEEN SIGNED, SEALED AND DATED ELECTRONICALLY.

DATE PREPARED	7/29/2020
ROUTE	Y
STATE	MO
DISTRICT	NW
SHEET NO.	4
COUNTY	PUTNAM
JOB NO.	J1S3163
CONTRACT ID.	
PROJECT NO.	
BRIDGE NO.	

DESCRIPTION

DATE

MISSOURI HIGHWAYS AND TRANSPORTATION COMMISSION
105 WEST CAPITOL
JEFFERSON CITY, MO 65102
1-888-ASK-MODOT (1-888-275-6636)

IF A SEAL IS PRESENT ON THIS SHEET IT HAS BEEN ELECTRONICALLY SEALED AND DATED.

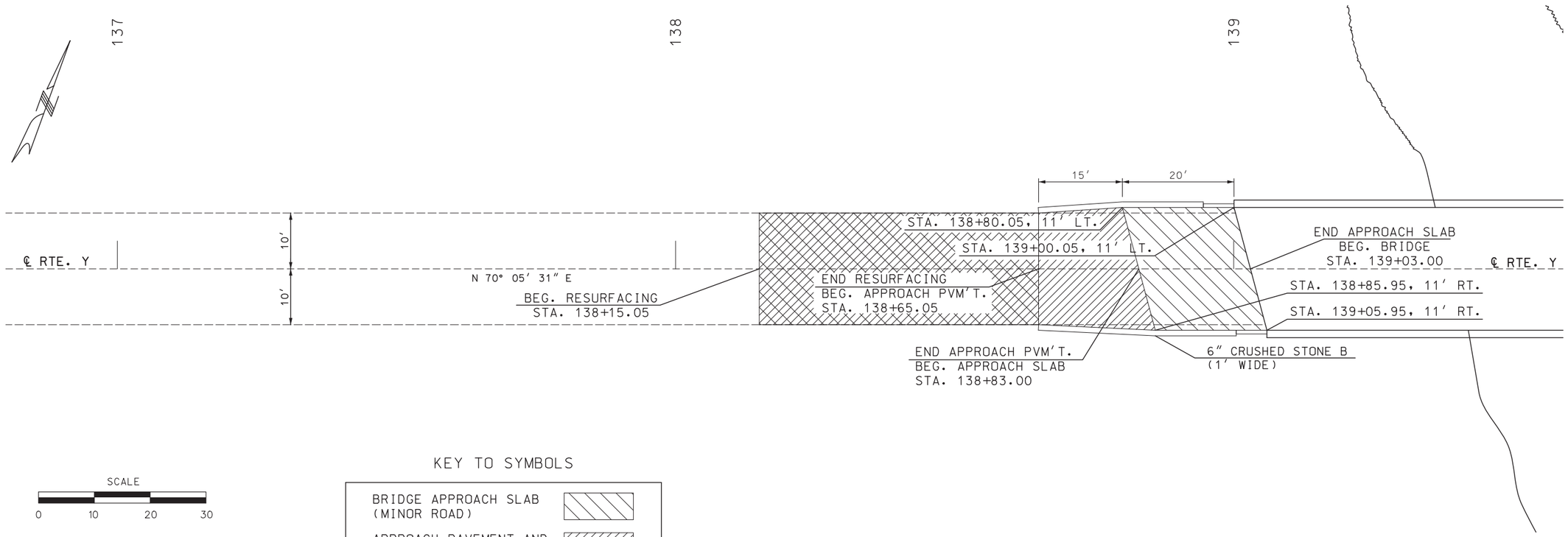

SCALE

0 10 20 30

KEY TO SYMBOLS

BRIDGE APPROACH SLAB (MINOR ROAD)	
APPROACH PAVEMENT AND PAVEMENT WIDENING	
COLDMILLING AND RESURFACING	

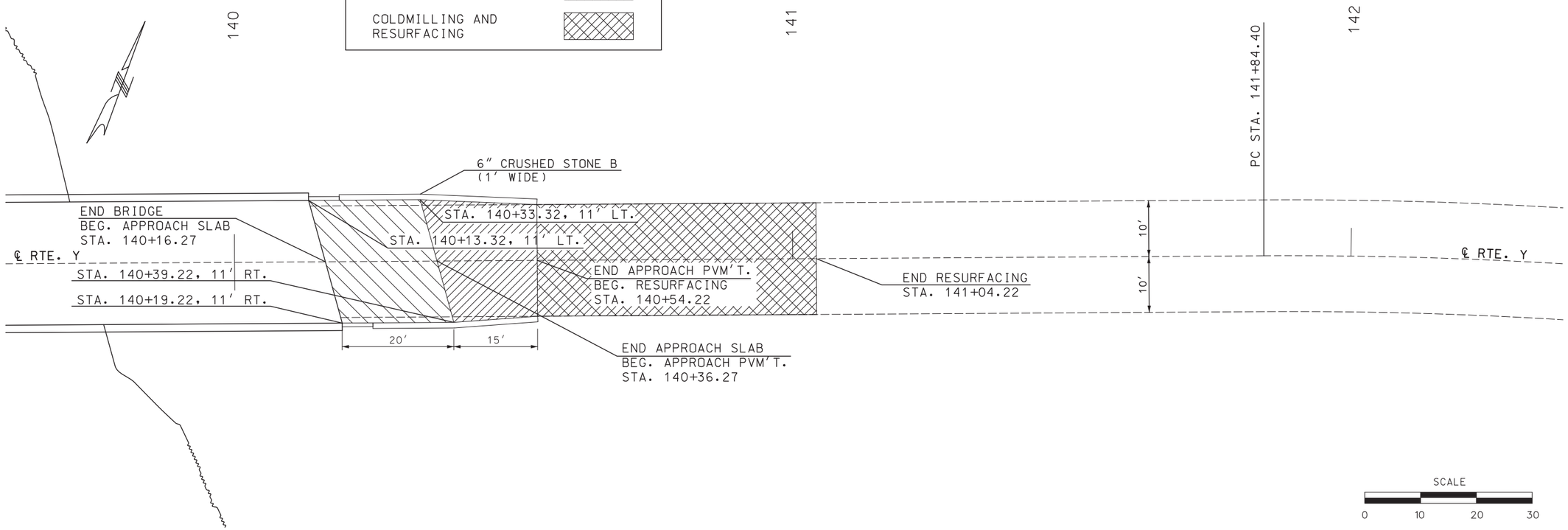

SCALE

0 10 20 30

STATE OF MISSOURI
JOYCE M. REYNOLDS
NUMBER PE-2002016722
PROFESSIONAL ENGINEER

THIS SHEET HAS BEEN SIGNED, SEALED AND DATED ELECTRONICALLY.

DATE PREPARED	
8/3/2020	
ROUTE: Y	STATE: MO
DISTRICT: NW	SHEET NO.: 5
COUNTY: PUTNAM	
JOB NO.: J1S3163	
CONTRACT ID.	
PROJECT NO.	
BRIDGE NO.	

DATE	DESCRIPTION

IF A SEAL IS PRESENT ON THIS SHEET IT HAS BEEN ELECTRONICALLY SEALED AND DATED.

MISSOURI HIGHWAYS AND TRANSPORTATION COMMISSION

105 WEST CAPITOL
JEFFERSON CITY, MO 65102
1-888-ASK-MODOT (1-888-275-6636)

APPROACH DETAILS

SPECIAL SHEET 1 OF 2

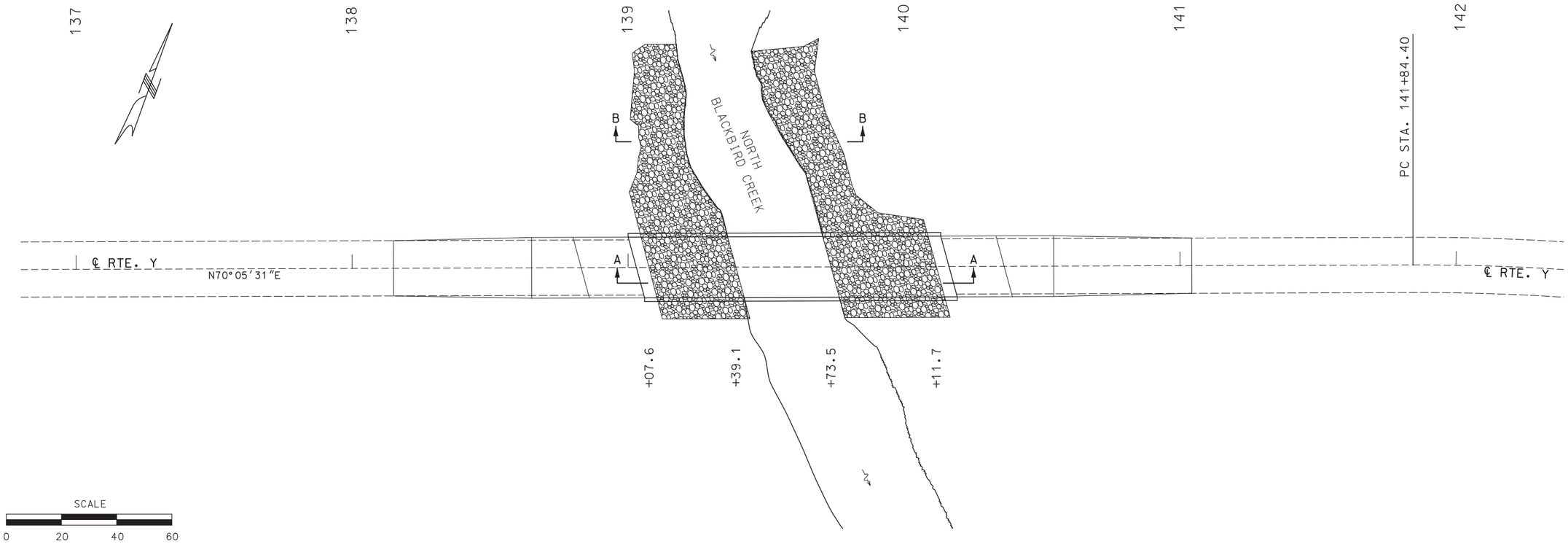

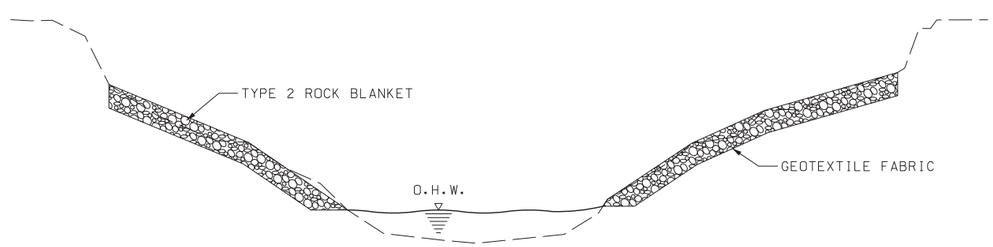

SECTION A-A

NOT TO SCALE

KEY TO SYMBOLS

TYPE 2 ROCK BLANKET

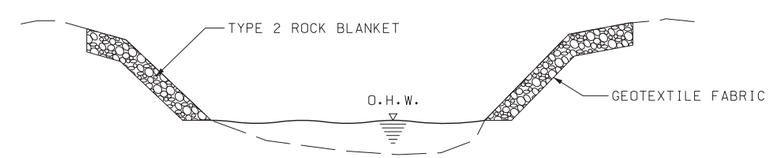

SECTION B-B

NOT TO SCALE

STATE OF MISSOURI
JOYCE M. REYNOLDS
NUMBER PE-2002016722
PROFESSIONAL ENGINEER

THIS SHEET HAS BEEN SIGNED, SEALED AND DATED ELECTRONICALLY.

DATE PREPARED	
7/29/2020	
ROUTE	STATE
Y	MO
DISTRICT	SHEET NO.
NW	6
COUNTY	
PUTNAM	
JOB NO.	
J1S3163	
CONTRACT ID.	
PROJECT NO.	
BRIDGE NO.	

DATE	DESCRIPTION

IF A SEAL IS PRESENT ON THIS SHEET IT HAS BEEN ELECTRONICALLY SEALED AND DATED.

MISSOURI HIGHWAYS AND TRANSPORTATION COMMISSION

105 WEST CAPITOL
JEFFERSON CITY, MO 65102
1-888-ASK-MODOT (1-888-275-6636)

ROCK BLANKET DETAILS

SPECIAL SHEET 2 OF 2

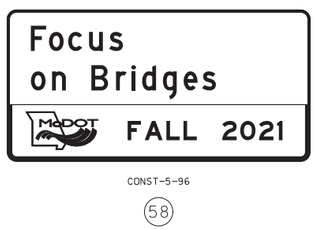

TYPE III MOVEABLE BARRICADE

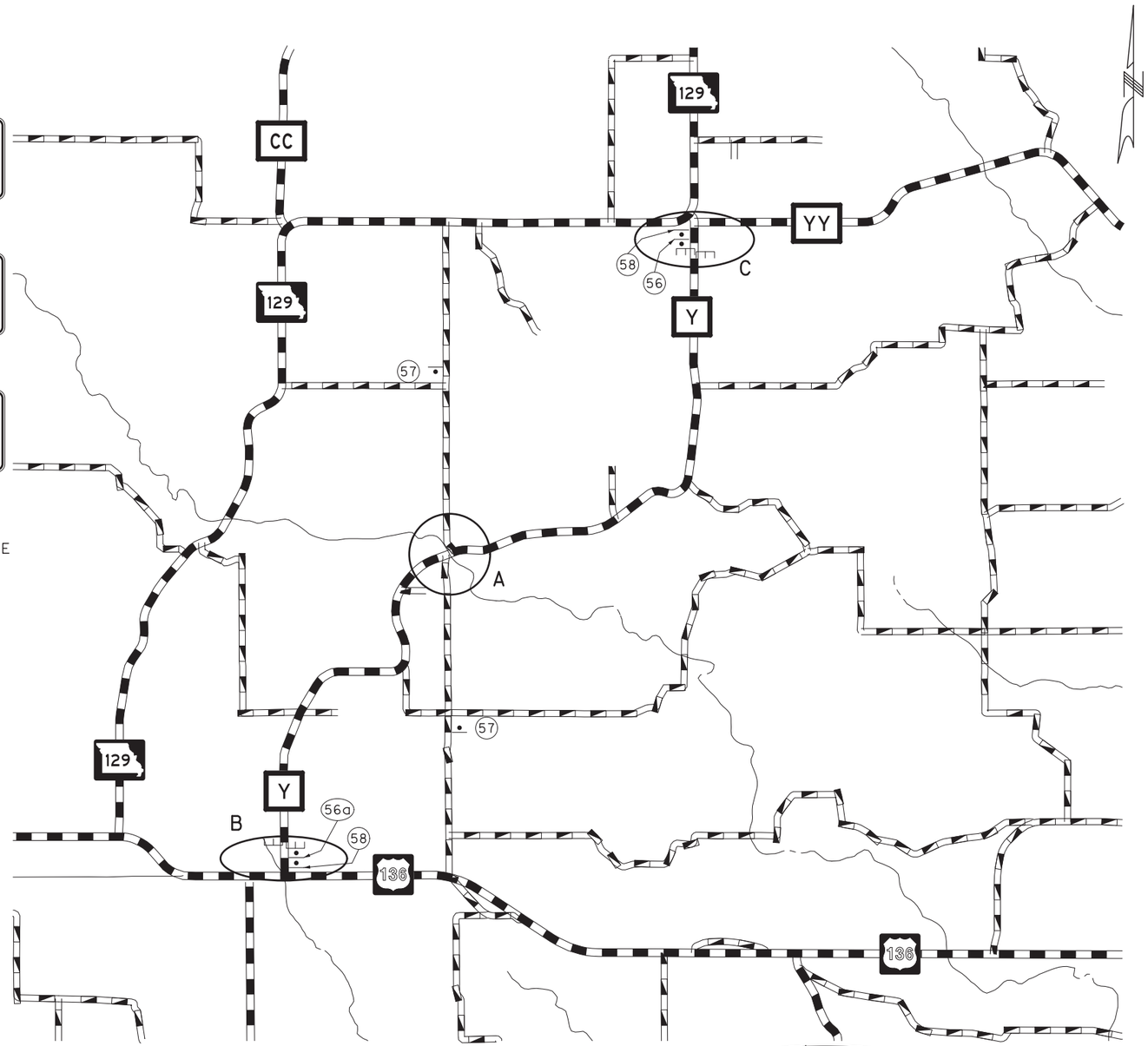

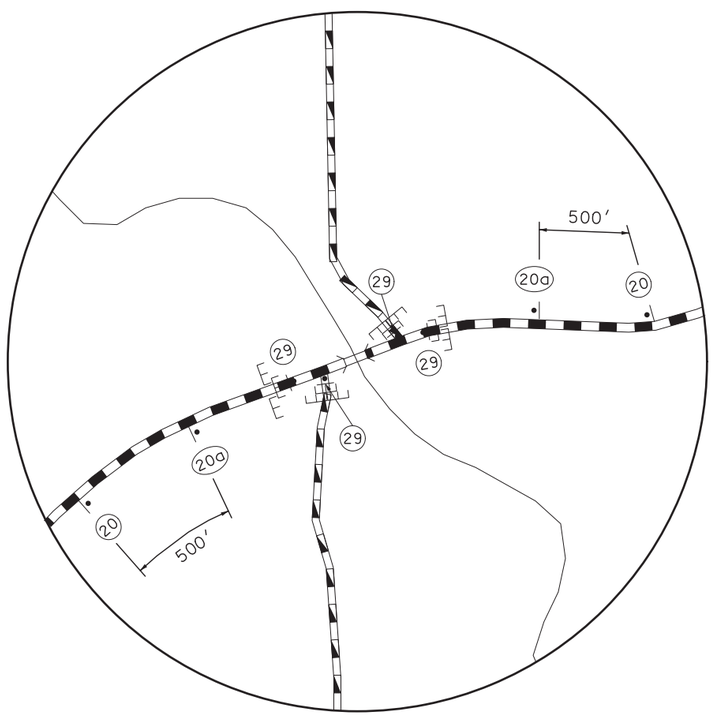

DETAIL A

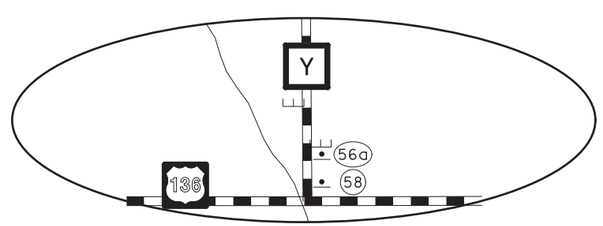

DETAIL B NOT TO SCALE

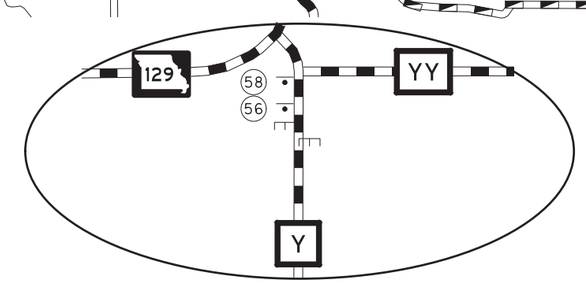

DETAIL C

STATE OF MISSOURI
JOYCE M. REYNOLDS
NUMBER
PE-2002016722
PROFESSIONAL ENGINEER

THIS SHEET HAS BEEN SIGNED, SEALED AND DATED ELECTRONICALLY.

DATE PREPARED	8/3/2020
ROUTE	Y
STATE	MO
DISTRICT	NW
SHEET NO.	7
COUNTY	PUTNAM
JOB NO.	J1S3163
CONTRACT ID.	
PROJECT NO.	
BRIDGE NO.	

DATE	DESCRIPTION

IF A SEAL IS PRESENT ON THIS SHEET IT HAS BEEN ELECTRONICALLY SEALED AND DATED.

MISSOURI HIGHWAYS AND TRANSPORTATION COMMISSION

MoDOT

105 WEST CAPITOL
JEFFERSON CITY, MO 65102
1-888-ASK-MODOT (1-888-275-6636)

TRAFFIC CONTROL

SHEET 1 OF 1

137
138
139
140
141
142
NORTH
BLACKBIRD
CREEK
EXIST. R/W
EXIST. R/W
EXIST. R/W
EXIST. R/W
℄ RTE. Y
℄ RTE. Y
N 70°05' 31" E
PC STA. 141+84.40
+29.12
+70.26
+03.80
+19.02
+54.14
+78.85

SCALE
0 20 40 60

TEMPORARY EROSION CONTROL LEGEND

SILT FENCE

STATE OF MISSOURI
JOYCE M. REYNOLDS
NUMBER
PE-2002016722
PROFESSIONAL ENGINEER

THIS SHEET HAS BEEN SIGNED, SEALED AND DATED ELECTRONICALLY.

DATE PREPARED	
7/29/2020	
ROUTE	STATE
Y	MO
DISTRICT	SHEET NO.
NW	8
COUNTY	
PUTNAM	
JOB NO.	
J1S3163	
CONTRACT ID.	
PROJECT NO.	
BRIDGE NO.	

DATE	DESCRIPTION

MISSOURI HIGHWAYS AND TRANSPORTATION COMMISSION
105 WEST CAPITOL
JEFFERSON CITY, MO 65102
1-888-ASK-MODOT (1-888-275-6636)

EROSION CONTROL PLAN

SHEET 1 OF 1

IF A SEAL IS PRESENT ON THIS SHEET IT HAS BEEN ELECTRONICALLY SEALED AND DATED.

SEC/SUR 29 TWP 66N RGE 18W

U.I.P., REDECK AND MAKE COMPOSITE EXISTING (33′,45′,33′) SIMPLE WIDE FLANGE BEAM SPANS (SKEW: 15° R.A.)

Required Lap Length For Bar Splices ✱✱	
Bar Size	Splice Length
4	2′-7″
5	3′-3″
6	3′-10″
7	4′-11″

✱✱ Unless otherwise shown.

Table Showing S2 Bar Lengths			
Int. Bent No. 2		Int. Bent No. 3	
Span 1	Span 2	Span 2	Span 3
9′-11″	8′-7″	8′-7″	9′-11″

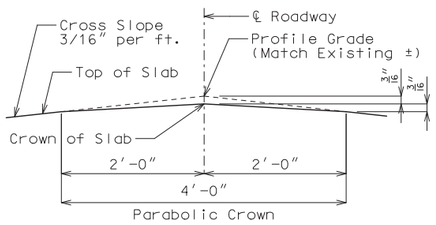

DETAIL A

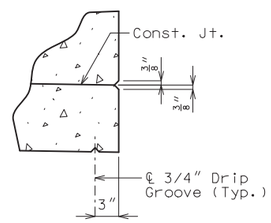

DETAIL B

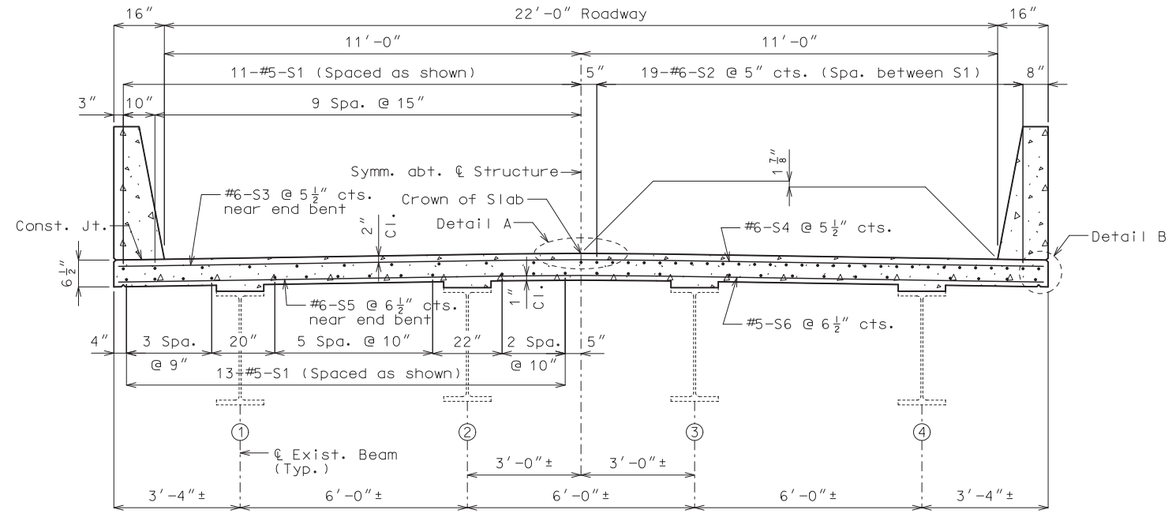

HALF SECTION NEAR MIDSPAN AND END BENT

HALF SECTION NEAR INT. BENT

TYPICAL SECTION THRU SLAB

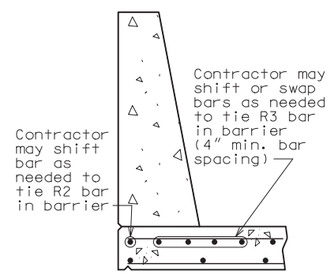

OPTIONAL SHIFTING TOP BARS AT BARRIER

General Notes:

Design Specifications:
2002 AASHTO LFD (17th Ed.) Standard Specifications
Seismic Performance Category A

Design Loading:
H10-44 (1953) (Existing)
HS20-44 (New Construction)
35 lb/sf Future Wearing Surface
Earth - 120 lb/cf, Equivalent Fluid Pressure 45 lb/cf
Fatigue Stress - Case III

Design Unit Stresses:
Class B-1 Concrete (Type D Barrier) f′c = 4,000 psi
Class B-2 Concrete (End Bents & Superstructure, except Type D Barrier) f′c = 4,000 psi
Reinforcing Steel (Grade 60) fy = 60,000 psi

Joint Filler:
All joint filler shall be in accordance with Sec 1057 for preformed sponge rubber expansion and partition joint filler, except as noted.

Reinforcing Steel:
Minimum clearance to reinforcing steel shall be 1 1/2″, unless otherwise shown.

Miscellaneous:
Bars bonded in old concrete not removed shall be cleanly stripped and embedded into new concrete where possible. If length is available, old bars shall extend into new concrete at least 40 diameters for smooth bars and 30 diameters for deformed bars, unless otherwise noted.

Roadway surfacing adjacent to bridge ends shall match new bridge slab surface. (Roadway item)

Outline of old work is indicated by light dashed lines. Heavy lines indicate new work.

Contractor shall verify all dimensions in field before ordering new material.

The area exposed by the removal of concrete and not covered with new concrete shall be coated with an approved qualified special mortar in accordance with Sec 704.

Traffic Handling:
Structure to be closed during construction. Traffic to be maintained on other routes during construction. See roadway plans for traffic control.

Estimated Quantities		
Item		Total
Removal of Existing Bridge Deck	sq. foot	2530
Bridge Approach Slab (Minor Road)	sq. yard	106
Slab on Steel	sq. yard	308
✱ Type D Barrier	linear foot	224
Substructure Repair (Formed)	sq. foot	100
Shear Connectors	each	760
Slab Drain	each	20
Surface Preparation for Applying Epoxy-Mastic Primer	lump sum	1
Aluminum Epoxy-Mastic Primer	lump sum	1
Vertical Drain at End Bents	each	2

✱ Type D barrier shall be cast-in-place option or slip-form option.

Cost of any required excavation for bridge will be considered completely covered by the contract unit price for other items.

Estimated Quantities for Slab on Steel		
Item		Total
Class B-2 Concrete	cu. yard	70
Reinforcing Steel (Epoxy Coated)	pound	22,970

The table of Estimated Quantities for Slab on Steel represents the quantities used by the State in preparing the cost estimate for concrete slabs. The area of the concrete slab will be measured to the nearest square yard longitudinally from end of slab to end of slab and transversely from out to out of bridge slab (or with the horizontal dimensions as shown on the plan of slab). Payment for stay-in-place corrugated steel forms, conventional forms, all concrete and epoxy coated reinforcing steel will be considered completely covered by the contract unit price for the slab. Variations may be encountered in the estimated quantities but the variations cannot be used for an adjustment in the contract unit price.

Method of forming the slab shall be in accordance with Sec 703. All hardware for forming the slab to be left in place as a permanent part of the structure shall be coated in accordance with ASTM A123 or ASTM B633 with a thickness class SC 4 and a finish type I, II or III.

Slab shall be cast-in-place with conventional forming or stay-in-place corrugated steel forms. Precast prestressed panels will not be permitted.

For Optional Stay-In-Place Form Details, see Sheet No. 2.

Bridge deck surface may be finished with a vibratory screed.

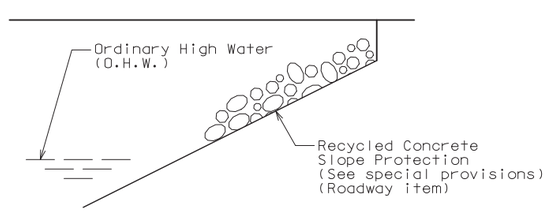

OPTIONAL SLOPE PROTECTION DETAIL

REPAIRS TO BRIDGE:
ROUTE Y OVER NORTH BLACKBIRD CREEK
ROUTE Y FROM ROUTE 129 TO ROUTE 136
ABOUT 3.2 MILES SOUTHWEST OF ROUTE 129
STA. 139+03.00± (Match existing)

STD. 609.00
STD. 617.10
STD. 706.35

Detailed Feb. 2020
Checked Mar. 2020

Note: This drawing is not to scale. Follow dimensions.

STATE OF MISSOURI
TRAVIS S. STUMP
NUMBER PE-2010000870
PROFESSIONAL ENGINEER
THIS SHEET HAS BEEN SIGNED, SEALED AND DATED ELECTRONICALLY.

DATE PREPARED 7/29/2020
ROUTE Y | STATE MO
DISTRICT BR | SHEET NO. 1
COUNTY PUTNAM
JOB NO. J1S3163
CONTRACT ID.
PROJECT NO.
BRIDGE NO. P08341

DATE | DESCRIPTION

IF A SEAL IS PRESENT ON THIS SHEET IT HAS BEEN ELECTRONICALLY SEALED AND DATED.

MISSOURI HIGHWAYS AND TRANSPORTATION COMMISSION
105 WEST CAPITOL
JEFFERSON CITY, MO 65102
1-888-ASK-MODOT (1-888-275-6636)

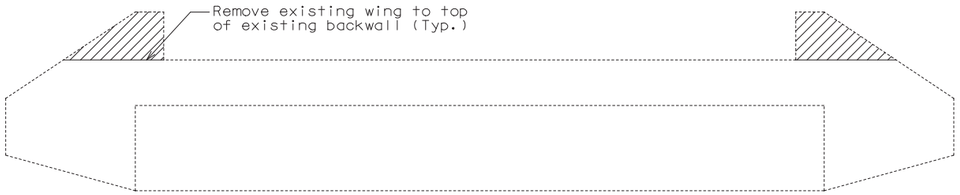

DETAILS OF CONCRETE REMOVAL AT END BENTS

The cost of concrete removal as shown will be considered completely covered by the contract unit price for Removal of Existing Bridge Deck. Vertical wingwall reinforcement to be cut off one inch below concrete removal surface and the resulting holes shall be filled with a qualified special mortar.

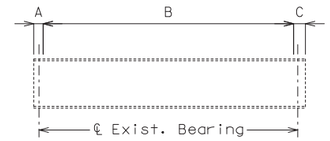

ELEVATION SHOWING SHEAR CONNECTOR SPACING

TABLE SHOWING SHEAR CONNECTOR UNIT SPACING				
Span	S.C. per unit	A	B	C
1	2	8"±	28 Units @ 14" cts.	8"±
2	2	3"±	39 Units @ 14" cts.	3"±
3	2	8"±	28 Units @ 14" cts.	8"±
Total shear connectors required				760

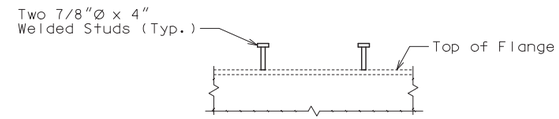

ELEVATION

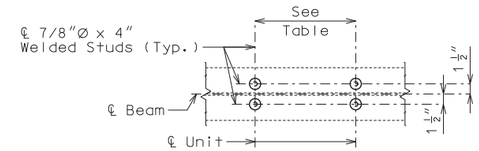

PLAN OF SHEAR CONN. (2 PER UNIT)

DETAILS OF SHEAR CONNECTORS

The cost of supplying and installing shear connectors will be considered completely covered by the contract unit price for Shear Connectors.

Shear connectors shall be in accordance with Sec 712, 1037 & 1080.

General Notes:

Stay-In-Place Forms:

Corrugated steel forms, supports, closure elements and accessories shall be in accordance with grade requirement and coating designation G165 of ASTM A653. Complete shop drawings of the permanent steel deck forms shall be required in accordance with Sec 1080.

Corrugations of stay-in-place forms shall be filled with an expanded polystyrene material. The polystyrene material shall be placed in the forms with an adhesive in accordance with the manufacturer's recommendations.

Form sheets shall not rest directly on the top of beam flanges. Sheets shall be securely fastened to form supports with a minimum bearing length of one inch on each end. Form supports shall be placed in direct contact with the flange. Welding on or drilling holes in the beam flanges will not be permitted. All steel fabrication and construction shall be in accordance with Sec 1080 and 712. Certified field welders will not be required for welding of the form supports.

The design of stay in place corrugated steel forms is per manufacturer which shall be in accordance with Sec 703 for false work and forms. Maximum actual weight of corrugated steel forms allowed shall be 4 psf assumed for beam loading.

Pouring and Finishing Slab:

The contractor shall provide bracing necessary for lateral and torsional stability of the beams during construction of the concrete slab and remove the bracing after the slab has attained 75% design strength. Contractor shall not weld on or drill holes in the beams. The cost for furnishing, installing, and removing bracing will be considered completely covered by the contract unit price for Slab on Steel.

Slab shall be poured upgrade from end to end at a minimum rate of 25 cubic yards per hour.

Alternate pour sequences may be submitted to the engineer for approval. Keyed construction joints shall be provided between pours.

Deflection and Haunching:

The contractor shall determine dead load deflections and haunching based on field measurements and/or existing bridge plans and these may be adjusted based on the difference between the new and existing dead load weights.

In order to properly form the haunches for the new deck, the contractor shall shoot deck elevations along each beam line prior to deck removal followed by shooting elevations of the tops of the beams after deck removal.

(1) Slab is to be considered a uniform thickness as shown on the plans. Haunching will vary. See front sheet for slab thickness.

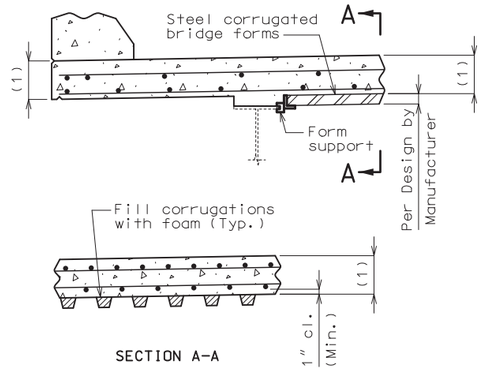

OPTIONAL STAY-IN-PLACE FORM DETAILS

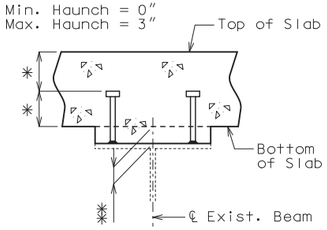

PART SECTION THRU EXIST. BEAM SHOWING SHEAR CONNECTORS

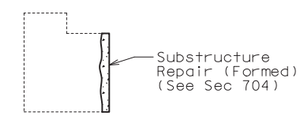

PART SECTION THRU INT. BENTS NO. 2 & 3 SHOWING SUBSTRUCTURE REPAIR

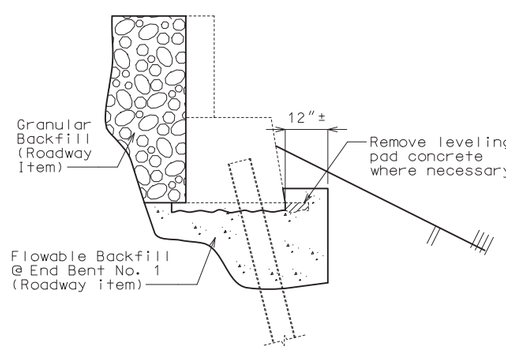

PART SECTION SHOWING FLOWABLE AND GRANULAR BACKFILL AT END BENTS

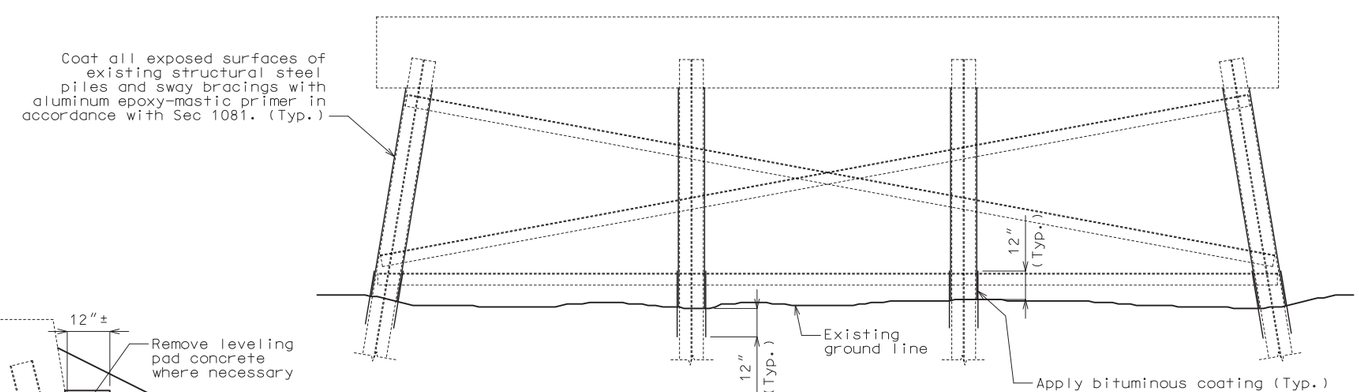

ELEVATION OF INTERMEDIATE BENTS NO. 2 & 3 SHOWING PROTECTIVE COATING ON EXISTING PILES

Note:

All exposed surfaces of the existing structural steel piles shall be coated with one 6-mil thickness of aluminum epoxy-mastic primer applied over an SSPC-SP3 surface preparation in accordance with Sec 1081. The requirements for bituminous coating shall be in accordance with Sec 702 and shall be applied one foot above and one foot below existing ground line. The cost of surface preparation will be considered completely covered by the contract lump sum price for Surface Preparation for Applying Epoxy-Mastic Primer. The cost of the aluminum epoxy-mastic primer and bituminous coating will be considered completely covered by the contract lump sum price for Aluminum Epoxy-Mastic Primer.

STATE OF MISSOURI
TRAVIS S. STUMP
NUMBER PE-2010000870
PROFESSIONAL ENGINEER
THIS SHEET HAS BEEN SIGNED, SEALED AND DATED ELECTRONICALLY.

DATE PREPARED 7/29/2020

ROUTE	STATE
Y	MO
DISTRICT	SHEET NO.
BR	2

COUNTY PUTNAM
JOB NO. J1S3163
CONTRACT ID.
PROJECT NO.
BRIDGE NO. P08341

DESCRIPTION
DATE

MISSOURI HIGHWAYS AND TRANSPORTATION COMMISSION
105 WEST CAPITOL
JEFFERSON CITY, MO 65102
1-888-ASK-MODOT (1-888-275-6636)

IF A SEAL IS PRESENT ON THIS SHEET IT HAS BEEN ELECTRONICALLY SEALED AND DATED.

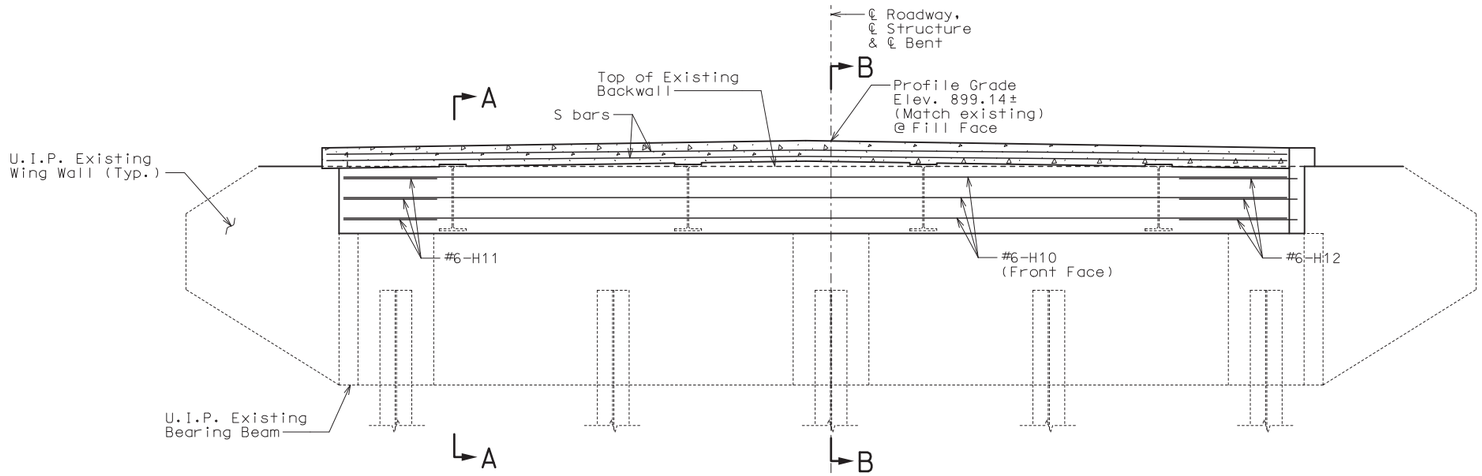

SECTION NEAR END BENT

Notes: Existing steel end diaphragms not shown for clarity (leave-in-place).

Resin anchor systems and Type D Barrier not shown for clarity.

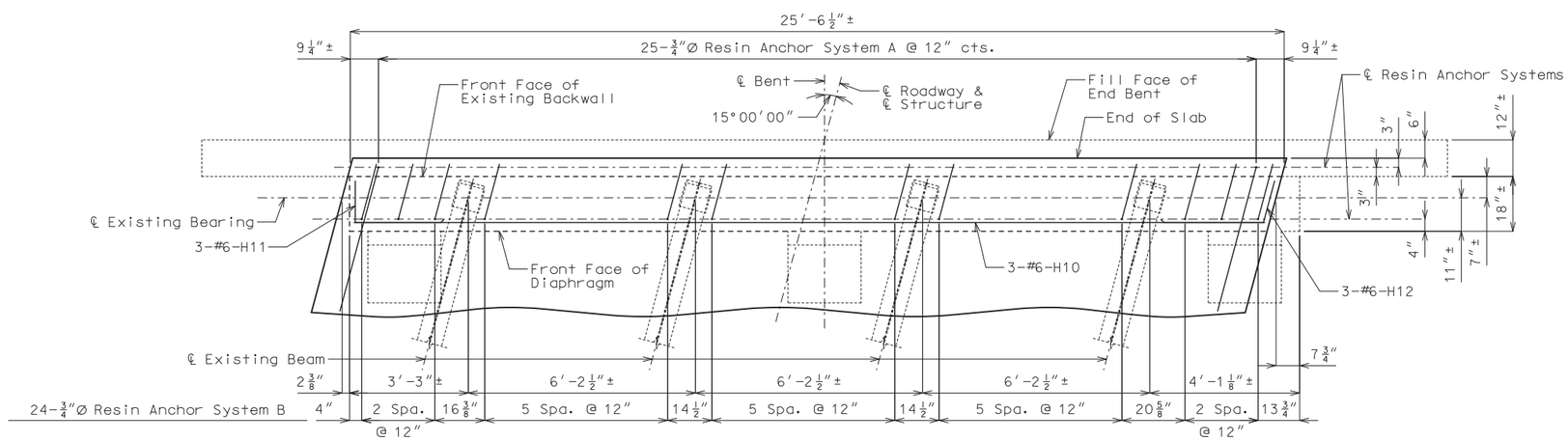

PART PLAN

Note: S bars not shown for clarity.

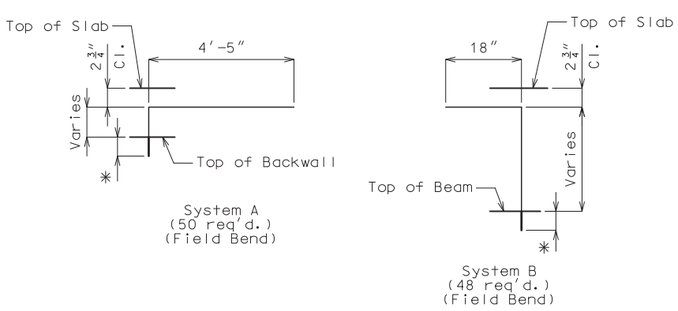

DETAILS OF RESIN ANCHOR SYSTEMS

* Manufacturer's recommended embedment length (5" min.)

Notes:

For details and reinforcement of Type D Barrier, see Sheets No. 8 & 9.

Work this sheet with Sheet No. 4.

DETAILS OF END BENTS NO. 1 & 4

Detailed Feb. 2020
Checked Mar. 2020

Note: This drawing is not to scale. Follow dimensions.

STATE OF MISSOURI
TRAVIS S. STUMP
NUMBER PE-2010000870
PROFESSIONAL ENGINEER

THIS SHEET HAS BEEN SIGNED, SEALED AND DATED ELECTRONICALLY.

DATE PREPARED	7/29/2020
ROUTE	Y
STATE	MO
DISTRICT	BR
SHEET NO.	3
COUNTY	PUTNAM
JOB NO.	J1S3163
CONTRACT ID.	
PROJECT NO.	
BRIDGE NO.	P08341

DESCRIPTION | DATE

MISSOURI HIGHWAYS AND TRANSPORTATION COMMISSION
105 WEST CAPITOL
JEFFERSON CITY, MO 65102
1-888-ASK-MODOT (1-888-275-6636)

IF A SEAL IS PRESENT ON THIS SHEET IT HAS BEEN ELECTRONICALLY SEALED AND DATED.

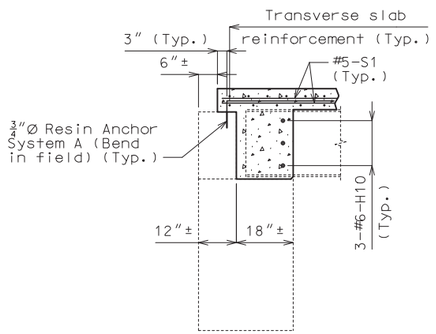

SECTION A-A

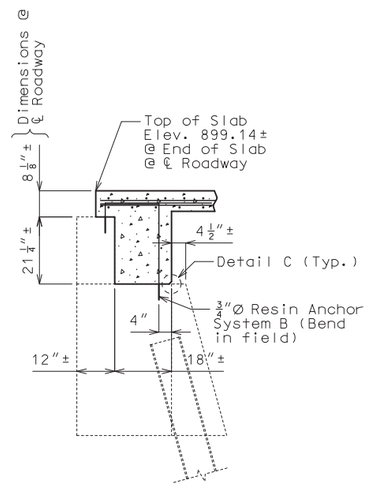

SECTION B-B

Notes:

The exposed and accessible surfaces of the existing structural steel and bearings that will be encased in concrete shall be cleaned with a minimum of SSPC-SP-3 surface preparation and coated with a minimum of one coat of gray epoxy-mastic primer (non-aluminum) in accordance with Sec 1081 to produce a dry film thickness of not less than 3 mils before concrete is poured. The surface preparation and coating for beams shall extend a minimum of one foot outside the face of the beam encasement. Payment for cleaning and coating steel to be encased in concrete will be considered completely covered by the contract unit price for Slab on Steel.

The H10 bars are segmented for ease of placement through beam web holes. The total bar length for H10 bars shown in Bill of Reinforcing Steel allows for one lap splice with a length of 3'-10". Actual bar segment lengths to be determined by contractor for ease of installing bars. The contractor may use a mechanical bar splice in lieu of a lap splice. When a mechanical bar splice is used, the actual bar segment length will be determined by the contractor to accommodate manufacturer's recommendations for installation and ease of construction. The cost of furnishing and installing the bar splices will be considered completely covered by the contract unit price for Slab on Steel. No adjustment of the quantity of reinforcing steel will be allowed for the use of mechanical bar splices.

Work this sheet with Sheet No. 3.

Notes:

The contractor shall use one of the qualified resin anchor systems in accordance with Sec 1039.

Cost of furnishing and installing the resin anchor systems, complete in place, will be considered completely covered by the contract unit price for Slab on Steel.

The minimum embedment depth in concrete with f'c = 4,000 psi for the resin anchor systems shall be that required to meet the minimum ultimate pullout strength in accordance with Sec 1039 but shall not be less than 5".

An epoxy coated #6 Grade 60 reinforcing bar shall be substituted for the 3/4" Ø threaded rod.

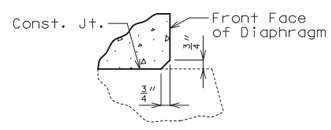

DETAIL C

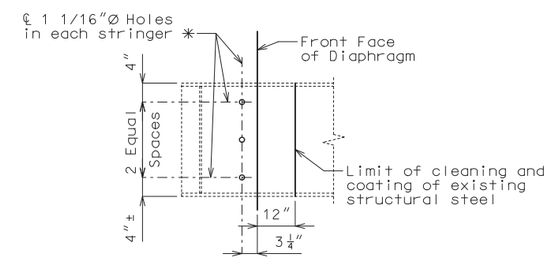

DETAILS OF WEB HOLES
AT END BENTS

✳ Cost of field drilling holes in existing wide flange beam webs will be considered completely covered by the contract unit price for Slab on Steel.

DETAILS OF END BENTS NO. 1 & 4

Detailed Feb. 2020
Checked Mar. 2020

Note: This drawing is not to scale. Follow dimensions.

STATE OF MISSOURI
TRAVIS S. STUMP
NUMBER
PE-2010000870
PROFESSIONAL ENGINEER

THIS SHEET HAS BEEN SIGNED, SEALED AND DATED ELECTRONICALLY.

DATE PREPARED	
7/29/2020	
ROUTE Y	STATE MO
DISTRICT BR	SHEET NO. 4
COUNTY PUTNAM	
JOB NO. J1S3163	
CONTRACT ID.	
PROJECT NO.	
BRIDGE NO. P08341	

DATE	DESCRIPTION

MISSOURI HIGHWAYS AND TRANSPORTATION COMMISSION
105 WEST CAPITOL
JEFFERSON CITY, MO 65102
1-888-ASK-MODOT (1-888-275-6636)

IF A SEAL IS PRESENT ON THIS SHEET IT HAS BEEN ELECTRONICALLY SEALED AND DATED.

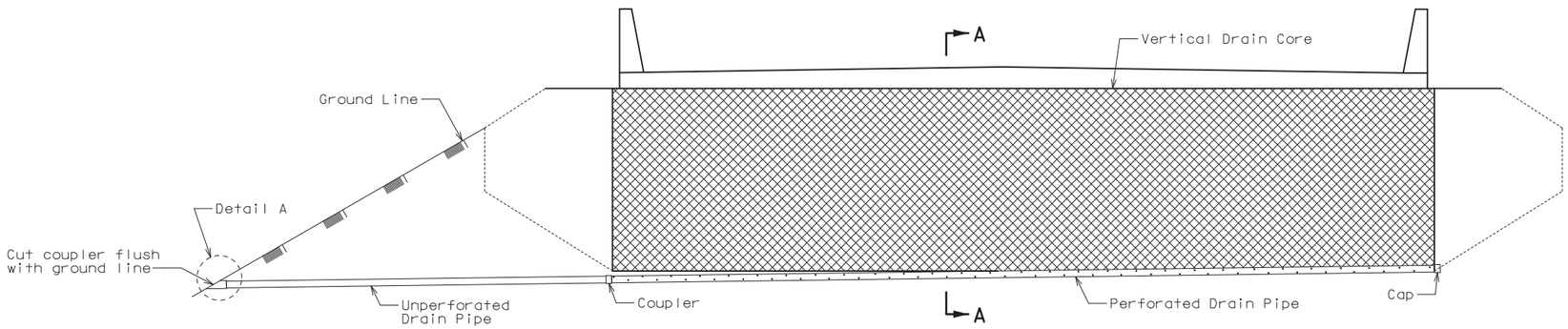

ELEVATION OF END BENT

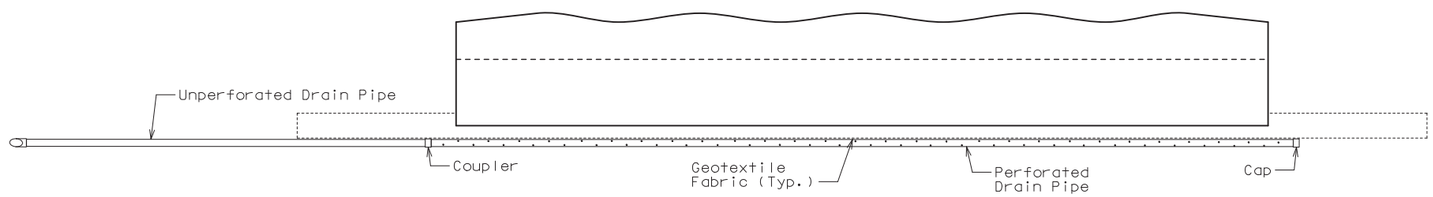

PLAN OF END BENT

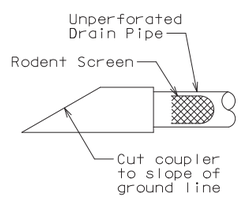

DETAIL A

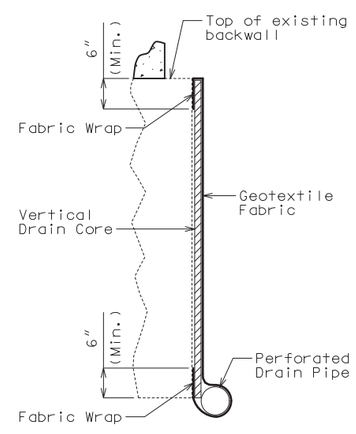

PART SECTION A-A
(Section thru wing similar)

General Notes:

All drain pipe shall be sloped 1 to 2 percent.

Drain pipe may be either 6-inch diameter corrugated metallic-coated steel pipe underdrain, 4-inch diameter corrugated polyvinyl chloride (PVC) drain pipe, or 4-inch diameter corrugated polyethylene (PE) drain pipe.

Drain pipe shall be placed at fill face of end bent and inside face of wings. The pipe shall slope to lowest grade of ground line, also missing the lower beam of end bent by a minimum of 1 1/2 inches.

Perforated pipe shall be placed at fill face side and inside face of wings at the bottom of end bent and plain pipe shall be used where the vertical drain ends to the exit at ground line.

VERTICAL DRAIN AT END BENTS

(Squared end bent shown, skewed end bent similar)

Detailed Feb. 2020
Checked Mar. 2020

Note: This drawing is not to scale. Follow dimensions.

STATE OF MISSOURI
TRAVIS S. STUMP
NUMBER
PE-2010000870
PROFESSIONAL ENGINEER

THIS SHEET HAS BEEN SIGNED, SEALED AND DATED ELECTRONICALLY.

DATE PREPARED	
7/29/2020	
ROUTE: Y	STATE: MO
DISTRICT: BR	SHEET NO.: 5
COUNTY: PUTNAM	
JOB NO.: J1S3163	
CONTRACT ID.	
PROJECT NO.	
BRIDGE NO.: P08341	

DATE	DESCRIPTION

IF A SEAL IS PRESENT ON THIS SHEET IT HAS BEEN ELECTRONICALLY SEALED AND DATED.

MISSOURI HIGHWAYS AND TRANSPORTATION COMMISSION
105 WEST CAPITOL
JEFFERSON CITY, MO 65102
1-888-ASK-MODOT (1-888-275-6636)

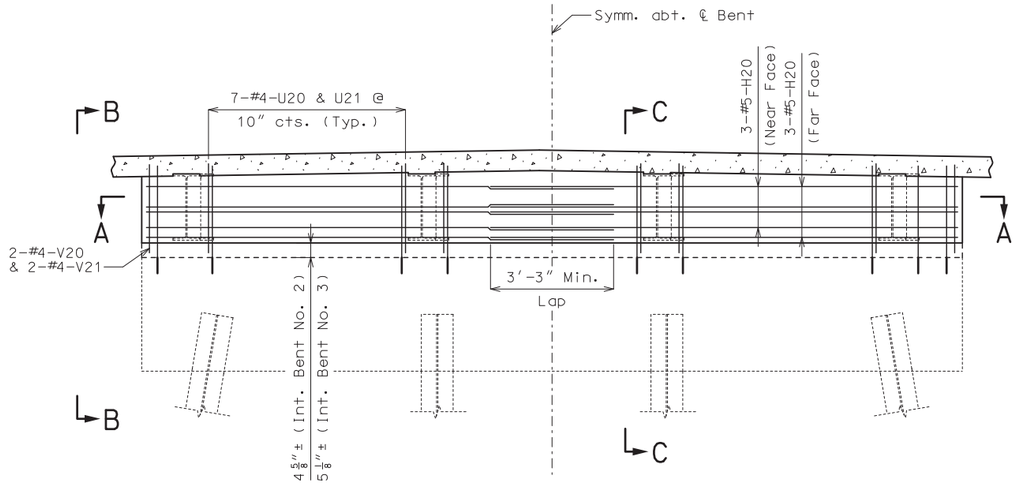

SECTION NEAR INTERMEDIATE BENT

Note: Existing steel end diaphragms not shown for clarity (leave-in-place).

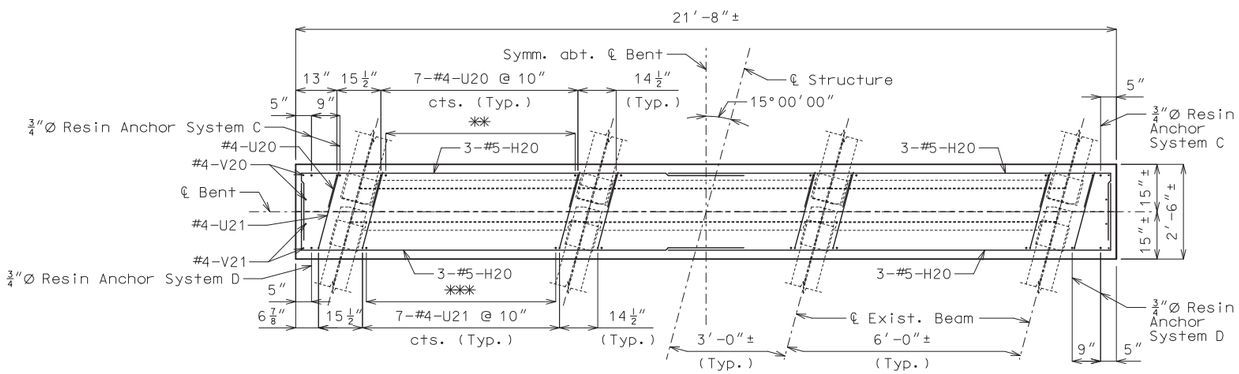

SECTION A-A

✱✱ 7-3/4″Ø Resin Anchor System C @ 10″ cts.(Typ.)

✱✱✱ 7-3/4″Ø Resin Anchor System D @ 10″ cts.(Typ.)

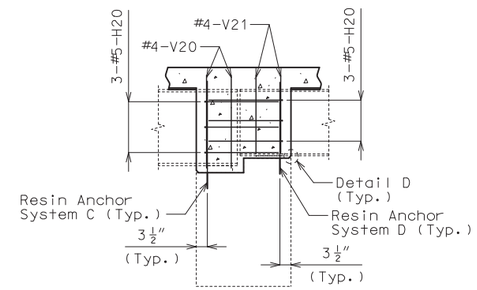

SECTION B-B

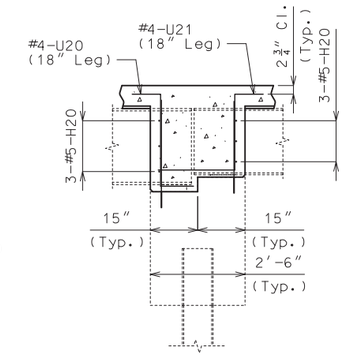

SECTION C-C

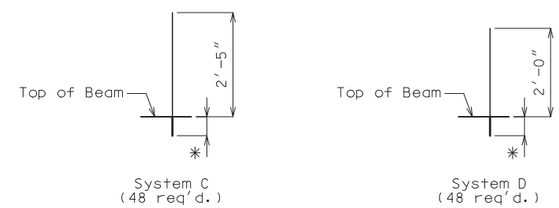

DETAILS OF RESIN ANCHOR SYSTEMS

✱ Manufacturer's recommended embedment length (5″ min.)

Note: For resin anchor notes, see Sheet No. 4.

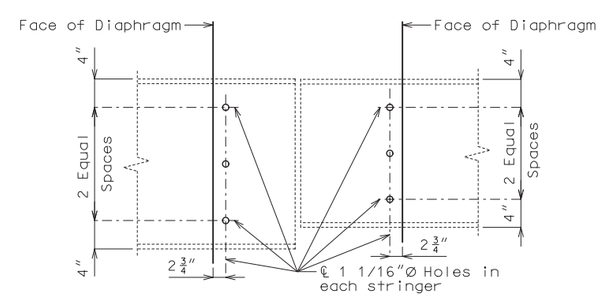

DETAILS OF WEB HOLES AT INTERMEDIATE BENTS

Notes:

The exposed and accessible surfaces of the existing structural steel and bearings that will be encased in concrete shall be cleaned with a minimum of SSPC-SP-3 surface preparation and coated with a minimum of one coat of gray epoxy-mastic primer (non-aluminum) in accordance with Sec 1081 to produce a dry film thickness of not less than 3 mils before concrete is poured. The surface preparation and coating for beams shall extend a minimum of one foot outside the face of the beam encasement. Payment for cleaning and coating steel to be encased in concrete will be considered completely covered by the contract unit price for Slab on Steel.

Cost of field drilling holes in existing wide flange beam webs will be considered completely covered by the contract unit price for Slab on Steel.

All concrete and reinforcement in the intermediate bent diaphragms, complete in place, will be considered completely covered by the contract unit price for Slab on Steel.

Substructure repairs on beam caps shall be done and cured prior to resin anchor installation.

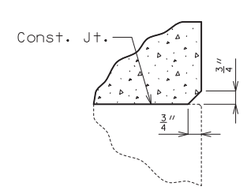

DETAIL D

DETAILS OF CONCRETE DIAPHRAGMS AT INTERMEDIATE BENTS NO. 2 & 3

(Bent No. 2 shown, Bent No. 3 similar)

Detailed Feb. 2020
Checked Mar. 2020

Note: This drawing is not to scale. Follow dimensions.

STATE OF MISSOURI
TRAVIS S. STUMP
NUMBER PE-2010000870
PROFESSIONAL ENGINEER

THIS SHEET HAS BEEN SIGNED, SEALED AND DATED ELECTRONICALLY.

DATE PREPARED	
7/29/2020	
ROUTE Y	STATE MO
DISTRICT BR	SHEET NO. 6
COUNTY PUTNAM	
JOB NO. J1S3163	
CONTRACT ID.	
PROJECT NO.	
BRIDGE NO. P08341	

DATE	DESCRIPTION

MISSOURI HIGHWAYS AND TRANSPORTATION COMMISSION
105 WEST CAPITOL
JEFFERSON CITY, MO 65102
1-888-ASK-MODOT (1-888-275-6636)

IF A SEAL IS PRESENT ON THIS SHEET IT HAS BEEN ELECTRONICALLY SEALED AND DATED.

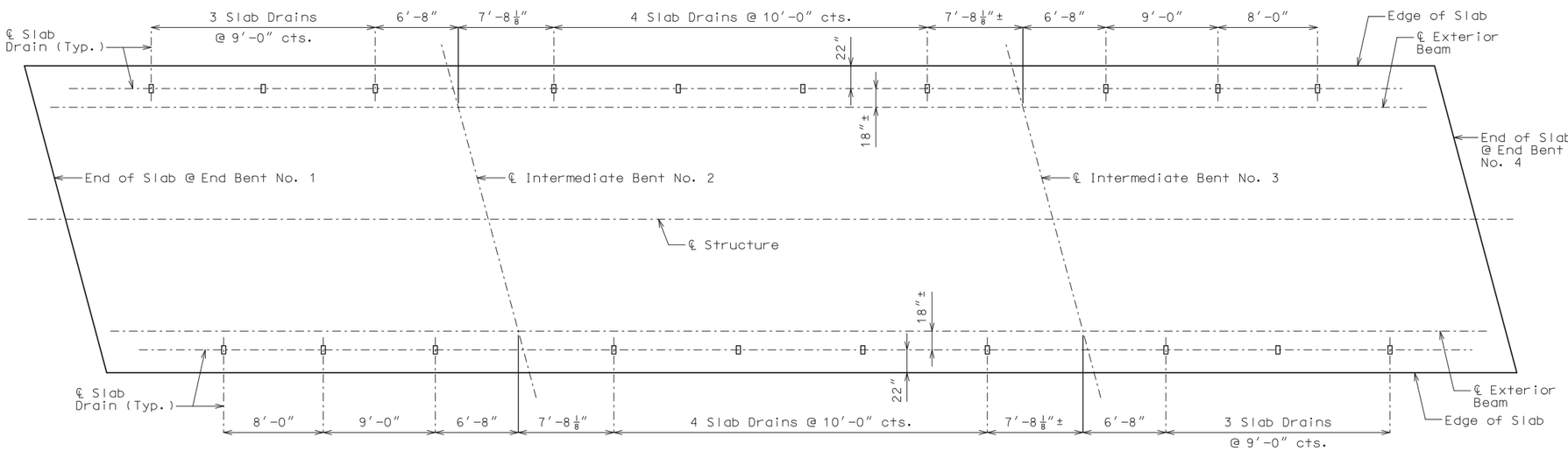

PLAN OF SLAB SHOWING SLAB DRAIN LOCATIONS

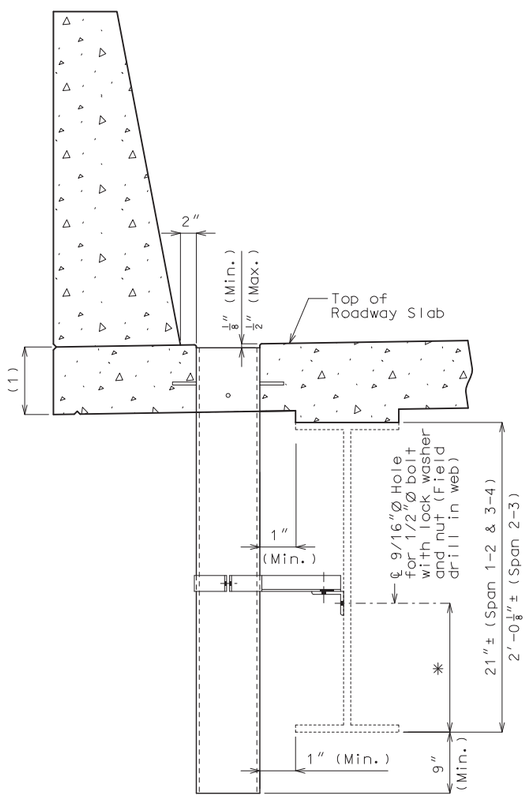

PART SECTION NEAR DRAIN

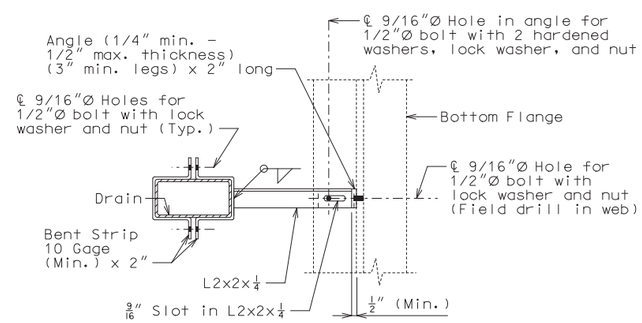

PART SECTION SHOWING BRACKET ASSEMBLY

* 3 1/2″ (Span 1-2 & 3-4)
4″ (Span 2-3)

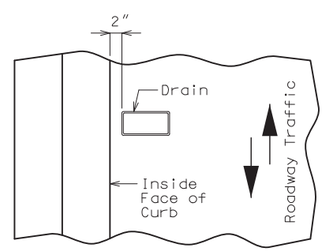

PART PLAN OF SLAB AT DRAIN

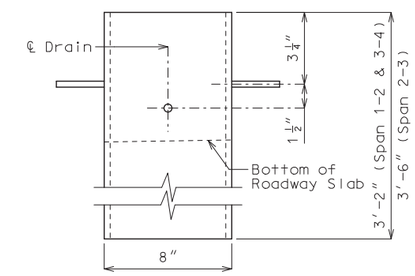

ELEVATION OF DRAIN

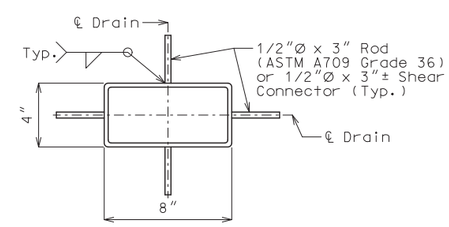

PLAN OF STEEL DRAIN OPTION

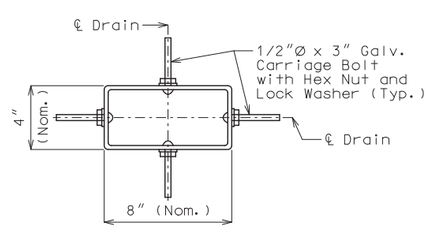

PLAN OF FRP DRAIN OPTION

General Notes:

Contractor shall have the option to construct either steel or FRP slab drains. All drains shall be of same type.

Slab drain bracket assembly shall be ASTM A709 Grade 36 steel.

Locate drains in slab by dimensions shown in Part Section Near Drain.

Reinforcing steel shall be shifted to clear drains.

The bracket assembly shall be galvanized in accordance with ASTM A123.

All bolts, hardened washers, lock washers and nuts shall be galvanized in accordance with ASTM A153.

Shop drawings will not be required for the slab drains and the bracket assembly.

The bolt hole for the bracket assembly attachment shall be shifted to the minimum extent necessary to field drill in the existing web.

(1) See front sheet for slab thickness.

Notes for Steel Drain:

Slab drains may be fabricated of either 1/4″ welded sheets of ASTM A709 Grade 36 steel or from 1/4″ structural steel tubing ASTM A500 or A501.

Outside dimensions of drains are 8″ x 4″.

The drains shall be galvanized in accordance with ASTM A123.

Notes for FRP Drain:

Drains shall be machine filament-wound thermosetting resin tubing meeting the requirements of ASTM D2996 with the following exceptions:

Shape of drains shall be rectangular with outside nominal dimensions of 8″ x 4″.

Minimum reinforced wall thickness shall be 1/4 inch.

The resin used shall be ultraviolet (UV) resistant and/or have UV inhibitors mixed throughout. Drains may have an exterior coating for additional UV resistance.

The color of the slab drain shall be gray (Federal Standard 26373). The color shall be uniform throughout the resin and any coating used.

The combination of materials used in the manufacture of the drains shall be tested for UV resistance in accordance with ASTM D4329 Cycle A. The representative material shall withstand at least 500 hours of testing with only minor discoloration and without any physical deterioration. The contractor shall furnish the results of the required ultraviolet testing prior to acceptance of the slab drains.

At the contractor's option, drains may be field cut. The method of cutting FRP slab drain shall be recommended by the manufacturer to ensure a smooth, chip free cut.

STATE OF MISSOURI
TRAVIS S. STUMP
NUMBER PE-2010000870
PROFESSIONAL ENGINEER
THIS SHEET HAS BEEN SIGNED, SEALED AND DATED ELECTRONICALLY.

DATE PREPARED 7/29/2020

ROUTE	STATE
Y	MO
DISTRICT	SHEET NO.
BR	7

COUNTY: PUTNAM
JOB NO.: J1S3163
CONTRACT ID.:
PROJECT NO.:
BRIDGE NO.: P08341

DATE	DESCRIPTION

MISSOURI HIGHWAYS AND TRANSPORTATION COMMISSION
105 WEST CAPITOL
JEFFERSON CITY, MO 65102
1-888-ASK-MODOT (1-888-275-6636)

IF A SEAL IS PRESENT ON THIS SHEET IT HAS BEEN ELECTRONICALLY SEALED AND DATED.

SLAB DRAIN DETAILS

Detailed Feb. 2020
Checked Mar. 2020

Note: This drawing is not to scale. Follow dimensions.

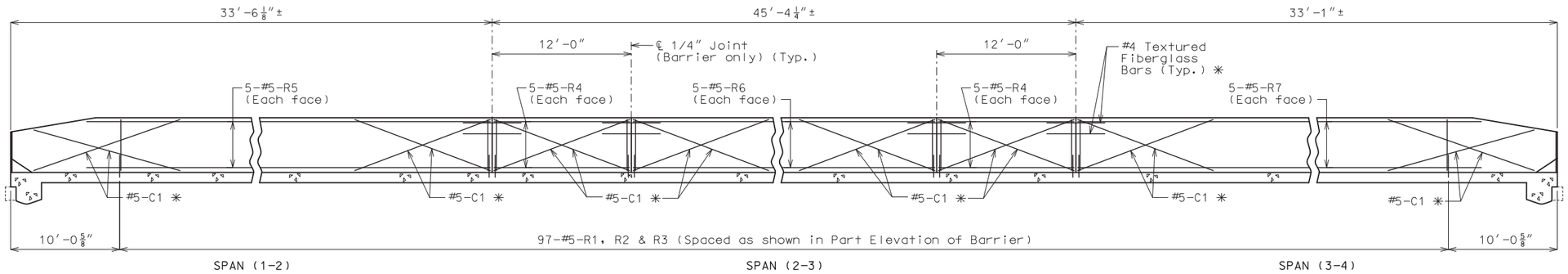

ELEVATION OF BARRIER

(Left barrier shown, right barrier similar by 180° rotation)
Longitudinal dimensions are horizontal.

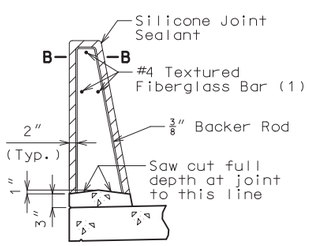

SECTION THRU SAW CUT JOINT

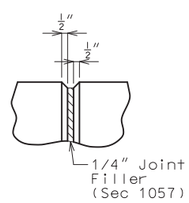

PART ELEVATION AT FORMED JOINT

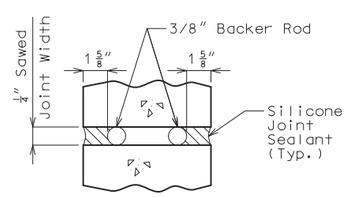

SECTION B-B

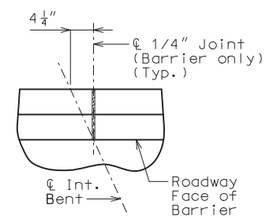

PART PLAN SHOWING JOINT LOCATION

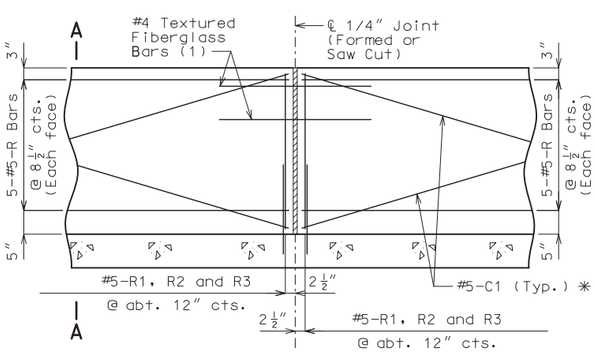

PART ELEVATION OF BARRIER

(1) Four feet long, centered on joint, slip-formed option only

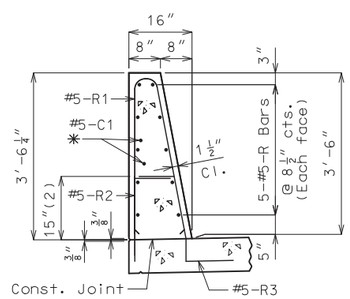

SECTION A-A

Use a minimum lap of 3′-1″ for #5 horizontal barrier bars.

The cross-sectional area above the slab is 3.52 square feet.

(2) To top of bar

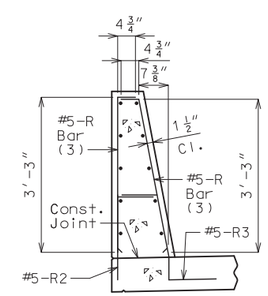

R-BAR PERMISSIBLE ALTERNATE SHAPE

(3) The R1 bar may be separated into two bars as shown, at the contractor's option, only when slip forming is not used. (All dimensions are out to out.)

General Notes:

✳ Slip-formed option only.

Conventional forming or slip forming may be used. Saw cut joints may be used with conventional forming.

Top of barrier shall be built parallel to grade and barrier joints normal to grade.

All exposed edges of barrier shall have either a 1/2-inch radius or a 3/8-inch bevel, unless otherwise noted.

Payment for all concrete and reinforcement, complete in place, will be considered completely covered by the contract unit price for Type D Barrier per linear foot.

Concrete in barrier shall be Class B-1.

Measurement of barrier is to the nearest linear foot for each structure, measured along the outside top of slab from end of slab to end of slab.

Concrete traffic barrier delineators shall be placed on top of the barrier as shown on Missouri Standard Plan 617.10 and in accordance with Sec 617. Delineators on bridges with two-lane, two-way traffic shall have retroreflective sheeting on both sides. Concrete traffic barrier delineators will be considered completely covered by the contract unit price for Type D Barrier.

Joint sealant and backer rods shall be in accordance with Sec 717 for silicone joint sealant for saw cut and formed joints.

For slip-formed option, both sides of barrier shall have a vertically broomed finish and the top shall have a transversely broomed finish.

TYPE D BARRIER

Detailed Feb. 2020
Checked Mar. 2020

Note: This drawing is not to scale. Follow dimensions.

STATE OF MISSOURI
TRAVIS S. STUMP
NUMBER PE-2010000870
PROFESSIONAL ENGINEER
THIS SHEET HAS BEEN SIGNED, SEALED AND DATED ELECTRONICALLY.

DATE PREPARED	
7/29/2020	
ROUTE: Y	STATE: MO
DISTRICT: BR	SHEET NO.: 8
COUNTY: PUTNAM	
JOB NO.: J1S3163	
CONTRACT ID.	
PROJECT NO.	
BRIDGE NO.: P08341	

DESCRIPTION	DATE

IF A SEAL IS PRESENT ON THIS SHEET IT HAS BEEN ELECTRONICALLY SEALED AND DATED.

MISSOURI HIGHWAYS AND TRANSPORTATION COMMISSION
105 WEST CAPITOL
JEFFERSON CITY, MO 65102
1-888-ASK-MODOT (1-888-275-6636)

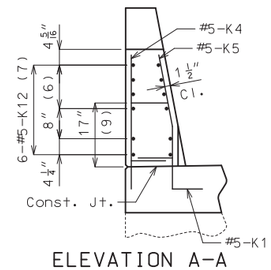

ELEVATION A-A

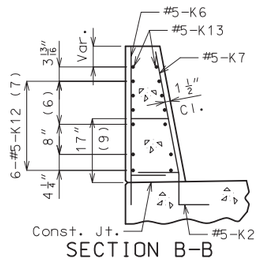

SECTION B-B

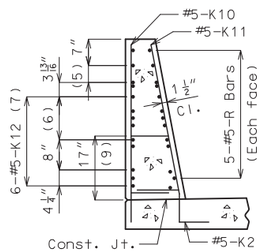

SECTION C-C

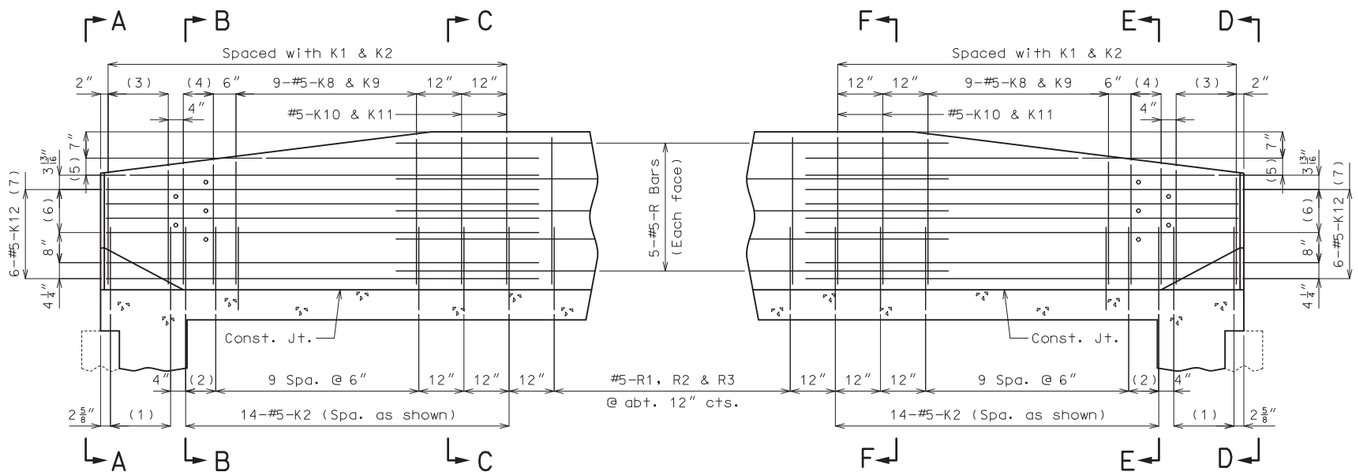

PART ELEVATION

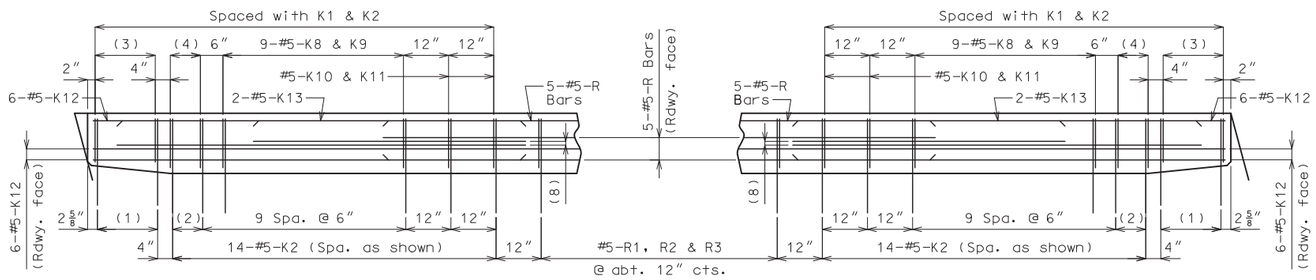

PART PLAN

(Top of barrier not shown for clarity.)

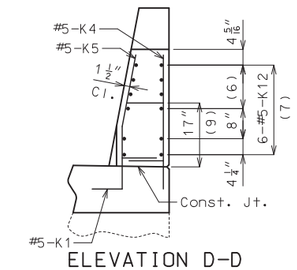

ELEVATION D-D

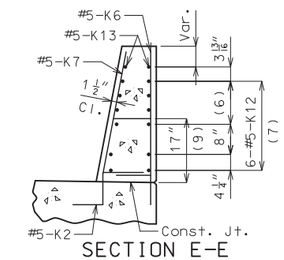

SECTION E-E

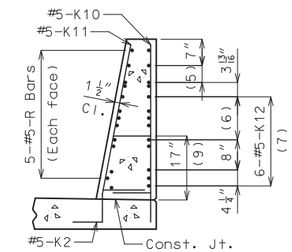

SECTION F-F

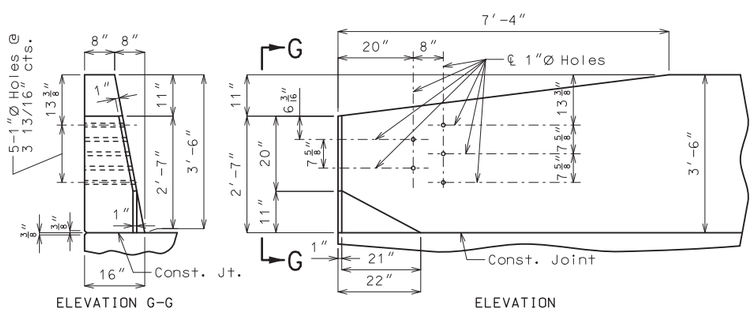

ELEVATION G-G

ELEVATION

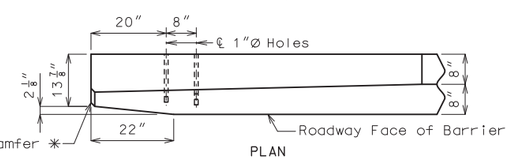

PLAN

✳ Transition to zero at Type A curb for gutter lines to match.

DETAILS OF GUARD RAIL ATTACHMENT

(1) 5-#5-K1 @ 4" cts.

(2) 2 spaces @ 4"

(3) 5-#5-K4 & K5

(4) 3-#5-K6 & K7

(5) 2-#5-K13 @ $4\frac{1}{2}$" cts., each face

(6) 3 spaces @ $3\frac{13}{16}$"

(7) Spaced as shown, each face

(8) 2-#5-K13 (Roadway face)

(9) To top of bar

General Notes:

Concrete traffic barrier delineators shall be placed on top of the barrier as shown on Missouri Standard Plan 617.10 and in accordance with Sec 617. Delineators on bridges with two-lane, two-way traffic shall have retroreflective sheeting on both sides. Concrete traffic barrier delineators will be considered completely covered by the contract unit price for Type D Barrier.

Reinforcing Steel:

Minimum clearance to reinforcing steel shall be 1 1/2".

Use a minimum lap of 3'-1" between horizontal K bars and R bars.

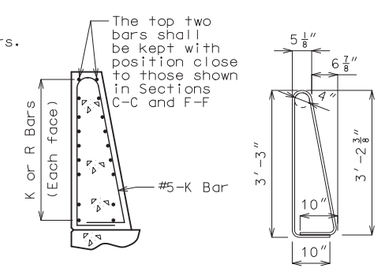

K10-K11 BAR PERMISSIBLE ALTERNATE SHAPE

(Other K bars not shown for clarity)

The K10-K11 bar combination may be furnished as one bar as shown, at the contractor's option.

TYPE D BARRIER AT END BENTS

(Left barrier shown, right barrier similar)

Detailed Feb. 2020
Checked Mar. 2020

Note: This drawing is not to scale. Follow dimensions.

STATE OF MISSOURI
TRAVIS S. STUMP
NUMBER PE-2010000870
PROFESSIONAL ENGINEER

THIS SHEET HAS BEEN SIGNED, SEALED AND DATED ELECTRONICALLY.

DATE PREPARED	
7/29/2020	
ROUTE Y	STATE MO
DISTRICT BR	SHEET NO. 9
COUNTY PUTNAM	
JOB NO. J1S3163	
CONTRACT ID.	
PROJECT NO.	
BRIDGE NO. P08341	

DATE	DESCRIPTION

IF A SEAL IS PRESENT ON THIS SHEET IT HAS BEEN ELECTRONICALLY SEALED AND DATED.

MISSOURI HIGHWAYS AND TRANSPORTATION COMMISSION

105 WEST CAPITOL
JEFFERSON CITY, MO 65102
1-888-ASK-MODOT (1-888-275-6636)

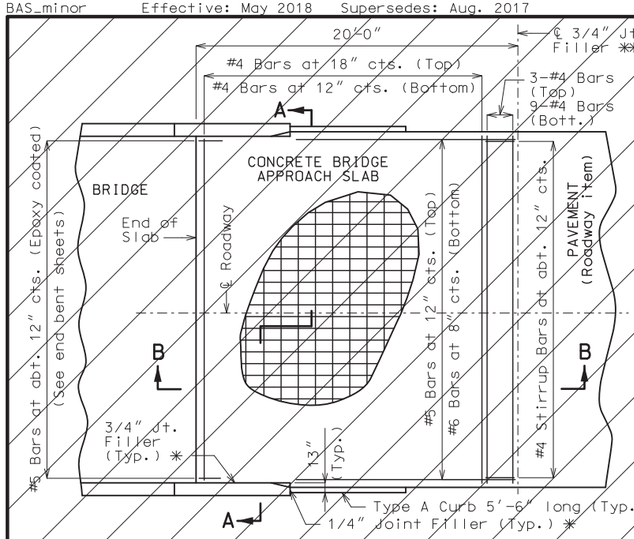

PART PLAN OF SQUARED STRUCTURE

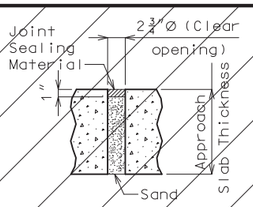

UNDERSEAL ACCESS HOLE DETAIL

(If required)

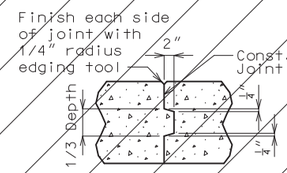

CONCRETE CONST. JOINT DETAIL

(If required)

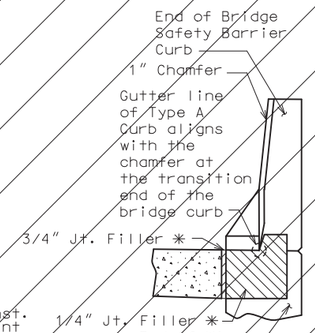

4" TYPE A CURB

Notes For Concrete Slab Only:

All concrete for the bridge approach slab shall be in accordance with Sec 503 (f'c = 4,000 psi).

The reinforcing steel in the bridge approach slab shall be epoxy coated Grade 60 with fy = 60,000 psi.

Longitudinal construction joints in bridge approach slab shall be aligned with longitudinal construction joints in bridge slab.

Minimum clearance to reinforcing steel shall be 1 1/2", unless otherwise shown.

The reinforcing steel in the bridge approach slab shall be continuous. The transverse reinforcing steel may be made continuous by lap splicing the #4 bars 23".

Mechanical bar splices shall be in accordance with Sec 710.

All joint filler shall be in accordance with Sec 1057 for preformed fiber expansion joint filler except as noted.

Payment for furnishing all materials, labor and excavation necessary to construct the concrete bridge approach slab, including the timber header, underdrain, Type 5 aggregate base, joint filler, and all other appurtenances and incidental work as shown on this sheet, complete in place, will be considered completely covered by the contract unit price for Bridge Approach Slab (Minor Road) per square yard.

See Missouri Standard Plans Drawing 609.00 for details of Type A Curb.

✱ Seal joint between vertical face of bridge approach slab and wing with "Silicone Joint Sealant for Saw Cut and Formed Joints" in accordance with Sec 717.

✱✱ Except not allowed with asphalt pavement.

General Notes:

Contractor shall have the option to construct either slab except as noted.

The contractor shall pour and satisfactorily finish the bridge slab before placing the bridge approach slab.

Drain pipe may be either 6" diameter corrugated metallic-coated pipe underdrain, 4" diameter corrugated polyvinyl chloride (PVC) drain pipe, or 4" diameter corrugated polyethylene (PE) drain pipe.

Notes For Asphalt Slab Only:

Payment for furnishing all materials, labor and excavation necessary to construct the asphalt bridge approach slab, including tack, curb, underdrain and Type 5 aggregate base within the pay limits shown, complete in place, will be considered completely covered by the contract unit price for Bridge Approach Slab (Minor Road) per square yard.

Application of tack is required between lifts per Sec 403.

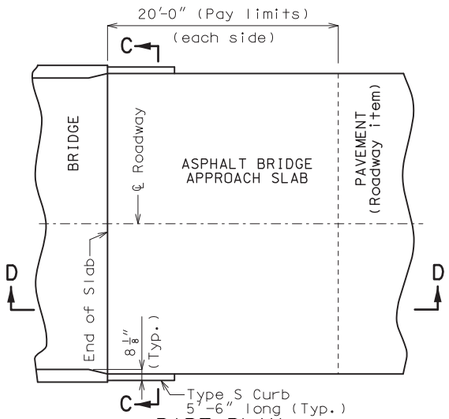

PART PLAN

(Squared structure shown, skewed structure similar)

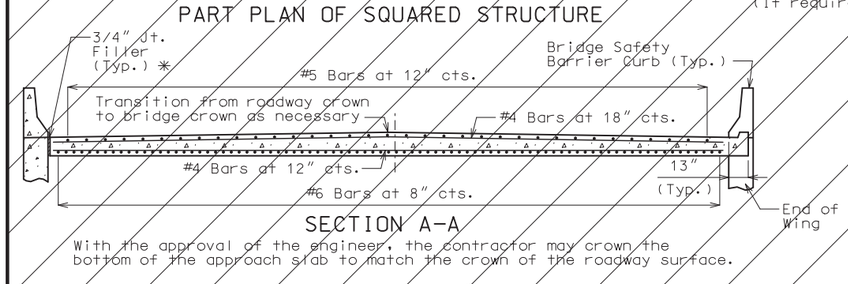

SECTION A-A

With the approval of the engineer, the contractor may crown the bottom of the approach slab to match the crown of the roadway surface.

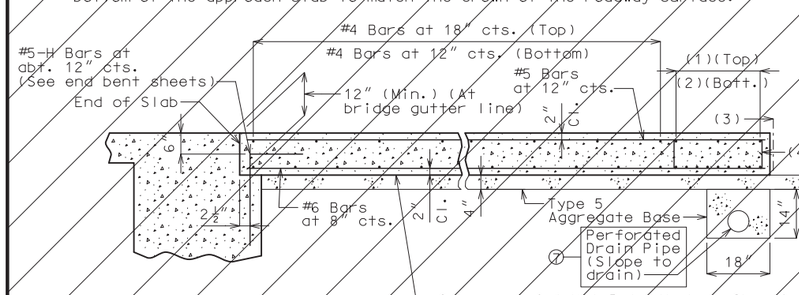

SECTION B-B

(Integral end bent)

PART SECTION B-B

(Non-integral end bent)

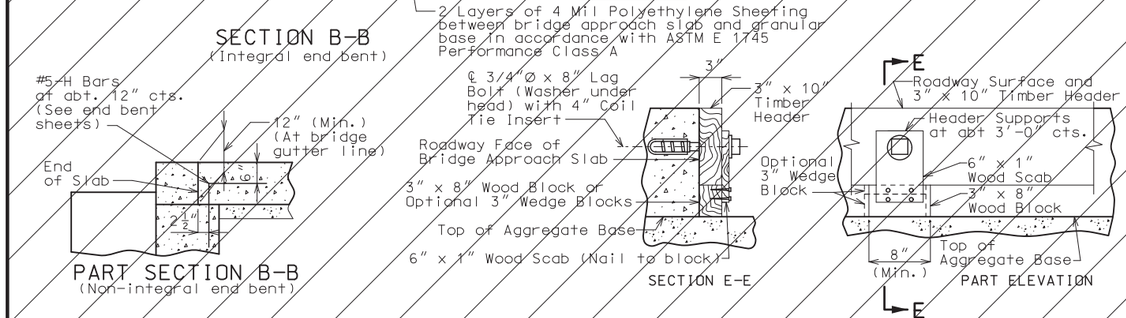

DETAILS OF TIMBER HEADER

Remove timber header when concrete pavement is placed.

OPTIONAL CONCRETE SLAB

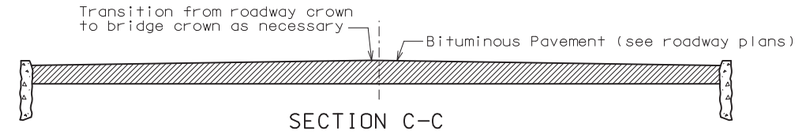

SECTION C-C

With the approval of the engineer, the contractor may crown the bottom of the approach slab to match the crown of the roadway surface.

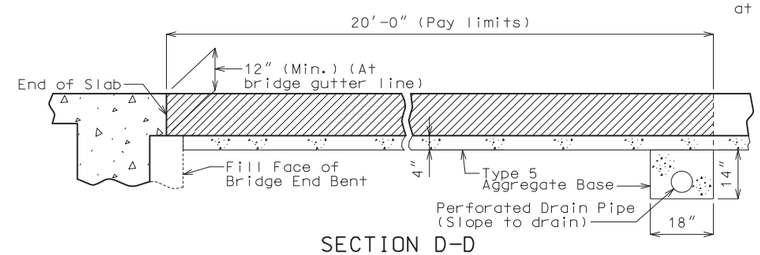

SECTION D-D

OPTIONAL ASPHALT SLAB (EXCEPT NOT ALLOWED WITH CONCRETE PAVEMENT)

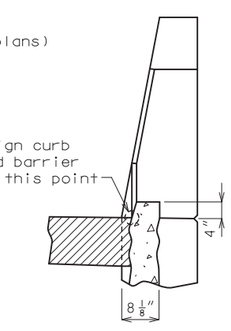

4" TYPE S CURB

See Missouri Standard Plans Drawing 609.00 for details of Type S Curb.

DETAILS OF BRIDGE APPROACH SLAB (MINOR ROAD)

Integral end bents shown, non-integral end bent similar.

Detailed Feb. 2020
Checked Mar. 2020

Note: This drawing is not to scale. Follow dimensions.

STATE OF MISSOURI
TRAVIS S. STUMP
NUMBER PE-2010000870
PROFESSIONAL ENGINEER
THIS SHEET HAS BEEN SIGNED, SEALED AND DATED ELECTRONICALLY.

DATE PREPARED	
7/29/2020	
ROUTE Y	STATE MO
DISTRICT BR	SHEET NO. 10
COUNTY PUTNAM	
JOB NO. J1S3163	
CONTRACT ID.	
PROJECT NO.	
BRIDGE NO. P08341	

DATE	DESCRIPTION

IF A SEAL IS PRESENT ON THIS SHEET IT HAS BEEN ELECTRONICALLY SEALED AND DATED.

MISSOURI HIGHWAYS AND TRANSPORTATION COMMISSION
105 WEST CAPITOL
JEFFERSON CITY, MO 65102
1-888-ASK-MODOT (1-888-275-6636)

BILL OF REINFORCING STEEL

NO. REQ'D.	MARK NO. SIZE	MARK NO. MARK	LOCATION	EPOXY (E)	SHAPE NO.	STIRRUP (S)	SUBSTR. (X)	VARIES (V)	NO. EACH	B FT. IN.	C FT. IN.	D FT. IN.	E FT. IN.	F FT. IN.	H FT. IN.	K FT. IN.	NOMINAL LENGTH FT. IN.	ACTUAL LENGTH FT. IN.	WEIGHT LBS.
			END BTS 1&4																
6	6	H10	DIAPHRAGM	E	20					28 9.000							28 9	28 9	259
6	6	H11	DIAPHRAGM	E	19	S				2 5.500	14.000						3 8	3 6	32
6	6	H12	DIAPHRAGM	E	23	S				14.500	2 10.000				14.000	3.625	4 1	3 11	35
			DIAPHRAGM AT																
			INT BTS 2&3																
24	5	H20	DIAPHRAGM	E	19	S				12 4.000	10.750						13 3	13 2	330
46	4	U20	DIAPHRAGM	E	28	S					10.250	2 5.000	18.000				4 9	4 7	141
46	4	U21	DIAPHRAGM	E	28	S					2 0.000	2 0.000	18.000				5 6	5 4	164
8	4	V20	DIAPHRAGM	E	20					2 5.000							2 5	2 5	13
8	4	V21	DIAPHRAGM	E	20					2 0.000							2 0	2 0	11
			SLAB																
94	5	S1	SLAB	E	20					57 8.000							57 8	57 8	5654
76	6	S2	SLAB	E	20					18 6.000							18 6	18 6	2112
26	6	S3	SLAB	E	20			V	2	3 0.000							3 0	3 0	
			INCREMENT =							23 7.000							23 7	23 7	519
			20.625 INCH																
230	6	S4	SLAB	E	20					24 5.000							24 5	24 5	8435
22	5	S5	SLAB	E	20			V	2	2 10.000							2 10	2 10	
			INCREMENT =							23 0.000							23 0	23 0	296
			24.250 INCH																
195	5	S6	SLAB	E	20					24 5.000							24 5	24 5	4966
			TYPE D																
			BARRIER																
20	5	K1	BARRIER	E	27	S				20.250	9.250	5.250	15.125	12.000	5.125	1.000	5 2	4 10	101
56	5	K2	BARRIER	E	27	S				20.250	9.250	17.250	3.250	12.000	17.000	3.250	5 2	4 10	282
20	5	K4	BARRIER	E	19	S		V	4	2 4.250	10.000						3 2	3 1	
			INCREMENT =							2 6.250	10.000						3 4	3 3	66
			0.500 INCH																
20	5	K5	BARRIER	E	14	S		V	4	8.375	9.625	18.500			4.000	18.000	3 1	2 11	
			INCREMENT =							8.375	9.625	20.500			4.500	20.000	3 3	3 1	63
			0.500 INCH																
12	5	K6	BARRIER	E	19	S		V	4	2 6.750	10.000						3 5	3 4	
			INCREMENT =							2 7.750	10.000						3 6	3 5	42
			0.500 INCH																
12	5	K7	BARRIER	E	21	S		V	4	2 6.750	10.000				2 6.125	6.250	3 5	3 3	
			INCREMENT =							2 7.750	10.000				2 7.125	6.500	3 6	3 4	41
			0.500 INCH																
36	5	K8	BARRIER	E	19	S		V	4	2 8.500	10.000						3 7	3 5	
			INCREMENT =							3 2.500	10.000						4 1	3 11	138
			0.750 INCH																
36	5	K9	BARRIER	E	21	S		V	4	2 8.625	10.000				2 7.875	6.750	3 7	3 5	
			INCREMENT =							3 2.625	10.000				3 1.875	7.750	4 1	3 11	138
			0.750 INCH																
8	5	K10	BARRIER	E	19	S				3 3.000	10.000						4 1	4 0	33
8	5	K11	BARRIER	E	21	S				3 3.125	10.000				3 2.375	7.875	4 1	3 11	33
48	5	K12	BARRIER	E	20					9 7.000							9 7	9 7	480

BILL OF REINFORCING STEEL

NO. REQ'D.	MARK NO. SIZE	MARK NO. MARK	LOCATION	EPOXY (E)	SHAPE NO.	STIRRUP (S)	SUBSTR. (X)	VARIES (V)	NO. EACH	B FT. IN.	C FT. IN.	D FT. IN.	E FT. IN.	F FT. IN.	H FT. IN.	K FT. IN.	NOMINAL LENGTH FT. IN.	ACTUAL LENGTH FT. IN.	WEIGHT LBS.
16	5	K13	BARRIER	E	20			V	8	5 10.000							5 10	5 10	
			INCREMENT =							8 10.000							8 10	8 10	122
			36.000 INCH																
194	5	R1	BARRIER	E	26					3 3.000	5.125	3 3.625			3 3.000	7.000	6 9	6 9	1366
194	5	R2	BARRIER	E	19	S				20.250	9.625						2 6	2 5	489
194	5	R3	BARRIER	E	27	S					9.625	12.000	3.125	9.625	11.625	2.875	2 10	2 8	540
40	5	R4	BARRIER	E	20					11 9.000							11 9	11 9	490
20	5	R5	BARRIER	E	20					26 10.000							26 10	26 10	560
20	5	R6	BARRIER	E	20					21 1.000							21 1	21 1	440
20	5	R7	BARRIER	E	20					26 4.000							26 4	26 4	549
			TYPE D																
			SLIP FORM																
			BARRIER																
32	5	C1	SLIP FORM	E	20					12 0.000							12 0	12 0	401
			TOTALS																
	4			E															329
	5			E															17620
	6			E															11392
			TOTAL																0
			TOTAL	E															29341
			Slab on																
			Girder																
	4			E															329
	5			E															11246
	6			E															11392
			TOTAL																22967
			Type D																
			Barrier																
	5			E															5973
			TOTAL																5973
			Slip Form																
			Option																
	5			E															401
			TOTAL																401

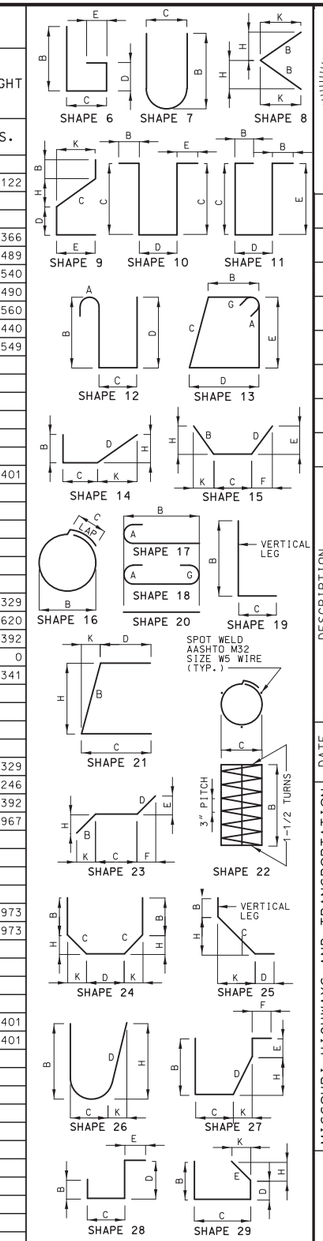

BENDING DIAGRAMS

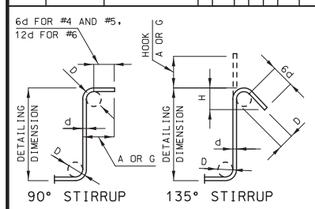

STIRRUP HOOK DIMENSIONS				
GRADES 40 - 50 - 60 KSI				
BAR SIZE	D (IN.)	90° HOOK	135° HOOK	
		HOOK A OR G	HOOK A OR G	APPROX. H
#4	2"	4 1/2"	4 1/2"	3"
#5	2 1/2"	6"	5 1/2"	3 3/4"
#6	4 1/2"	12"	8"	4 1/2"

NOTE: UNLESS OTHERWISE NOTED, DIAMETER "D" IS THE SAME FOR ALL BENDS AND HOOKS ON A BAR.

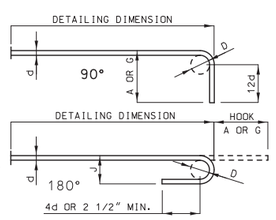

END HOOK DIMENSIONS				
BAR SIZE	D (IN.)	ALL GRADES		
		180° HOOKS		90° HOOKS
		A OR G	J	A OR G
#3	2 1/4"	5"	3"	6"
#4	3"	6"	4"	8"
#5	3 3/4"	7"	5"	10"
#6	4 1/2"	8"	6"	12"
#7	5 1/4"	10"	7"	14"
#8	6"	11"	8"	16"
#9	9 1/2"	15"	11 3/4"	19"
#10	10 3/4"	17"	13 1/4"	22"
#11	12"	19"	14 3/4"	2'-0"
#14	18 1/4"	2'-3"	21 3/4"	2'-7"

NOTE:
ALL STANDARD HOOKS AND BENDS OTHER THAN 180 DEGREE ARE TO BE BENT WITH SAME PROCEDURE AS FOR 90 DEGREE STANDARD HOOKS.
HOOKS AND BENDS SHALL BE IN ACCORDANCE WITH THE PROCEDURES AS SHOWN ON THIS SHEET.
E = EPOXY COATED REINFORCEMENT.
S = STIRRUP.
X = BAR IS INCLUDED IN SUBSTRUCTURE QUANTITIES.
V = BAR DIMENSIONS VARY IN EQUAL INCREMENTS BETWEEN DIMENSIONS SHOWN ON THIS LINE AND THE FOLLOWING LINE.
NO. EA. = NUMBER OF BARS OF EACH LENGTH.
NOMINAL LENGTHS ARE BASED ON OUT TO OUT DIMENSIONS SHOWN IN BENDING DIAGRAMS AND ARE LISTED FOR FABRICATORS USE. (NEAREST INCH)
ACTUAL LENGTHS ARE MEASURED ALONG CENTERLINE BAR TO THE NEAREST INCH.
PAYWEIGHTS ARE BASED ON ACTUAL LENGTHS.
FOUR ANGLE OR CHANNEL SPACERS ARE REQUIRED FOR EACH COLUMN SPIRAL. SPACERS ARE TO BE PLACED ON INSIDE OF SPIRALS. LENGTH AND WEIGHT OF COLUMN SPIRALS DO NOT INCLUDE SPLICES OR SPACERS.
REINFORCING STEEL (GRADE 60) FY = 60,000 PSI.

STATE OF MISSOURI
TRAVIS S. STUMP
NUMBER PE-2010000870
PROFESSIONAL ENGINEER
THIS SHEET HAS BEEN SIGNED, SEALED AND DATED ELECTRONICALLY.

DATE PREPARED 7/29/2020
ROUTE Y | STATE MO
DISTRICT BR | SHEET NO. 11
COUNTY PUTNAM
JOB NO. J1S3163
CONTRACT ID.
PROJECT NO.
BRIDGE NO. P08341

DATE	DESCRIPTION

MISSOURI HIGHWAYS AND TRANSPORTATION COMMISSION
105 WEST CAPITOL
JEFFERSON CITY, MO 65102
1-888-ASK-MODOT (1-888-275-6636)

IF A SEAL IS PRESENT ON THIS SHEET IT HAS BEEN ELECTRONICALLY SEALED AND DATED.

Detailed Feb. 2020
Checked Mar. 2020

Note: This drawing is not to scale. Follow dimensions.