MISSOURI HIGHWAYS AND TRANSPORTATION COMMISSION
PLANS FOR PROPOSED
STATE HIGHWAY

SCOTT COUNTY

DESIGN DESIGNATION

A.A.D.T. - 2021 = 9616 (I-55 N), 9606 (I-55 S)
A.A.D.T. - 2041 = 10,370 (I-55 N), 10,552 (I-55 S)
D.H.V. = 7.38% (I-55 N), 7.72% (I-55 S)
T = 32.86% (I-55 N), 28.37% (I-55 S)
V = 70 M.P.H.

FUNCTIONAL CLASSIFICATION- INTERSTATE

CONVENTIONAL SYMBOLS
(USED IN PLANS)

	EXISTING	NEW
BUILDINGS AND STRUCTURES		
GUARD RAIL		
GUARD CABLE		
CONCRETE RIGHT-OF-WAY MARKER		
STEEL RIGHT-OF-WAY MARKER		
LOCATION SURVEY MARKER		
UTILITIES		
FIBER OPTICS	-FO-	~~-FO-~~
OVERHEAD CABLE TV	-OTV-	~~-OTV-~~
UNDERGROUND CABLE TV	-UTV-	~~-UTV-~~
OVERHEAD TELEPHONE	-OT-	~~-OT-~~
UNDERGROUND TELEPHONE	-UT-	~~-UT-~~
OVERHEAD POWER	-OE-	~~-OE-~~
UNDERGROUND POWER	-UE-	~~-UE-~~
SANITARY SEWER	-S-	~~-S-~~
STORM SEWER	-SS-	~~-SS-~~
GAS	-G-	~~-G-~~
WATER	-W-	~~-W-~~
MANHOLE	SAN	
FIRE HYDRANT	HYD	
WATER VALVE	WV	
WATER METER	WM	
DROP INLET	D	
DITCH BLOCK		
GROUND MOUNTED SIGN	SIGN	
LIGHT POLE		
H-FRAME POWER POLE		
TELEPHONE PEDESTAL	PED	
FENCE		
CHAIN LINK	-V-	
WOVEN WIRE	-X-	
GATE POST		
BENCHMARK	BM	

NOTE: DASHED OR OPEN SYMBOLS INDICATE EXISTING FEATURES

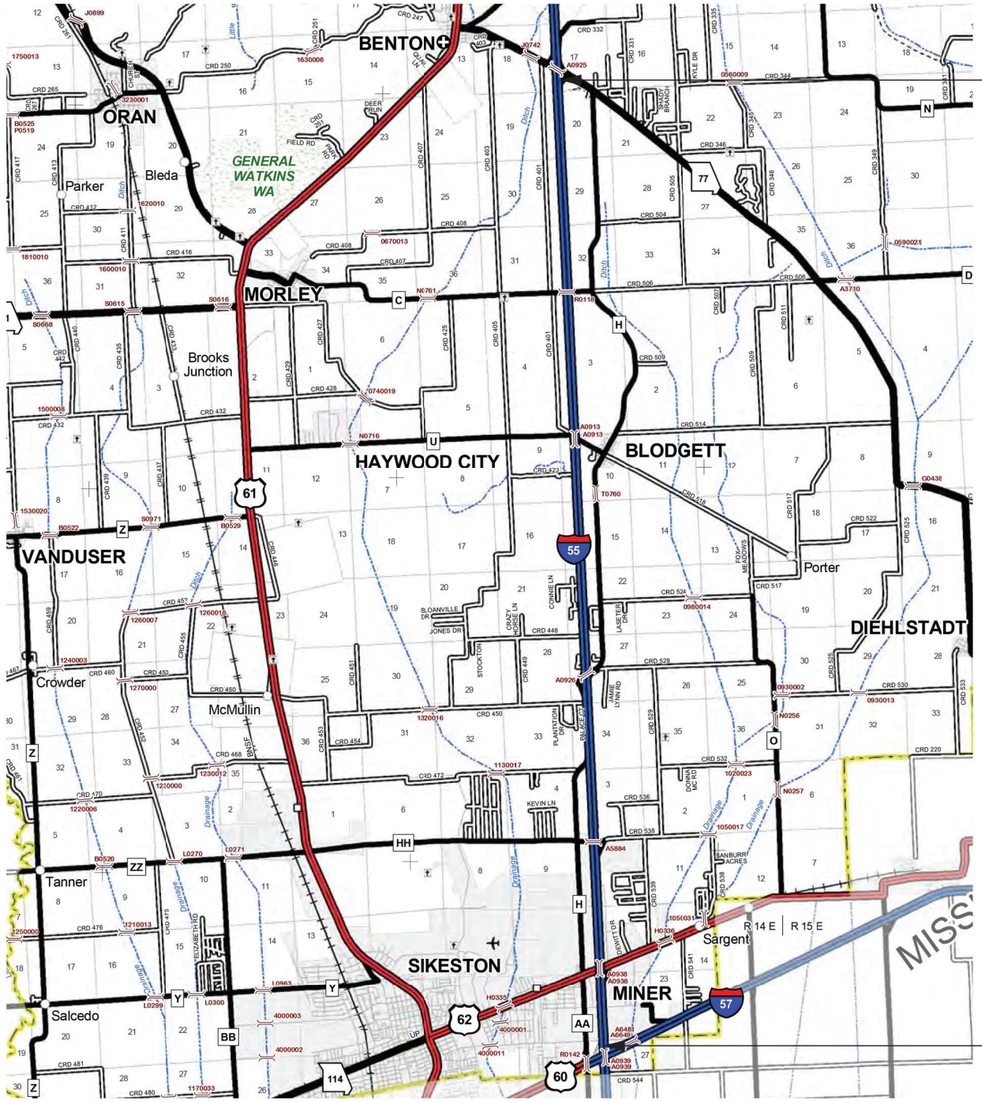

THE EXISTENCE AND APPROXIMATE LOCATION OF UTILITY FACILITIES KNOWN TO EXIST, AS SHOWN ON THE PLANS, ARE BASED ON THE BEST INFORMATION AVAILABLE TO THE COMMISSION AT THIS TIME. THIS INFORMATION IS PROVIDED BY THE COMMISSION "AS-IS" AND THE COMMISSION EXPRESSLY DISCLAIMS ANY REPRESENTATION OR WARRANTY AS TO THE COMPLETENESS, ACCURACY, OR SUITABILITY OF THE INFORMATION FOR ANY USE. RELIANCE UPON THIS INFORMATION IS DONE AT THE RISK AND PERIL OF THE USER, AND THE COMMISSION SHALL NOT BE LIABLE FOR ANY DAMAGES THAT MAY ARISE FROM ANY ERROR IN THE INFORMATION. IT IS, THEREFORE, THE RESPONSIBILITY OF THE CONTRACTOR TO VERIFY THE EXISTENCE, LOCATION AND STATUS OF ANY FACILITY. SUCH VERIFICATION INCLUDES DIRECT CONTACT WITH THE LISTED UTILITIES.

INDEX OF SHEETS

DESCRIPTION	SHEET NUMBER
TITLE SHEET	1
TYPICAL SECTIONS (TS) (3 SHEETS)	2
QUANTITIES (QU) (6 SHEETS)	3
PLAN-PROFILE (PP)	XX-XX
RIGHT OF WAY (RW)	XX-XX
REFERENCE POINTS (RP)	XX-XX
COORDINATE POINTS (CP)	XX-XX
SPECIAL SHEETS (SS)	4-8
TRAFFIC CONTROL SHEETS (TC)	9-15
EROSION CONTROL SHEETS (EC)	XX-XX
LIGHTING (LT)	XX-XX
SIGNALS (SG)	XX-XX
SIGNING (SN)	XX-XX
PAVEMENT MARKING (PM)	XX-XX
CULVERT SECTIONS (CS)	XX-XX
BRIDGE DRAWINGS (B)	
A09131	1-8
A09132	1-8
CROSS SECTIONS (XS)	XX-XX

LENGTH OF PROJECT

BEGINNING OF PROJECT
NB LOG MILE 66.203
SB LOG MILE 129.052

END OF PROJECT
NB LOG MILE 80.956
SB LOG MILE 143.650

APPARENT LENGTH 29.351 MILES

EQUATIONS AND EXCEPTIONS:

NB
A0938 (LM 67.474) - 0.053 MILES

SB
A0938 (LM 142.329) - 0.053 MILES

TOTAL CORRECTIONS -0.106 MILES
NET LENGTH OF PROJECT 29.245 MILES
STATE LENGTH 29.245 MILES

FOR INFORMATION ONLY
ESTIMATED DISTURBED ACRES 0 ACRES

STATE OF MISSOURI
TIMOTHY CHRISTOPHER PICKETT
NUMBER PE-2017000351
PROFESSIONAL ENGINEER

THIS SHEET HAS BEEN SIGNED, SEALED AND DATED ELECTRONICALLY.

DATE PREPARED	
5/28/2020	
ROUTE: I-55	STATE: MO
DISTRICT: SE	SHEET NO.: 1
COUNTY: SCOTT	
JOB NO.: J9I3545	
CONTRACT ID.	
PROJECT NO.	
BRIDGE NO.	

DATE	DESCRIPTION

IF A SEAL IS PRESENT ON THIS SHEET IT HAS BEEN ELECTRONICALLY SEALED AND DATED.

MISSOURI HIGHWAYS AND TRANSPORTATION COMMISSION
105 WEST CAPITOL
JEFFERSON CITY, MO 65102
1-888-ASK-MODOT (1-888-275-6636)

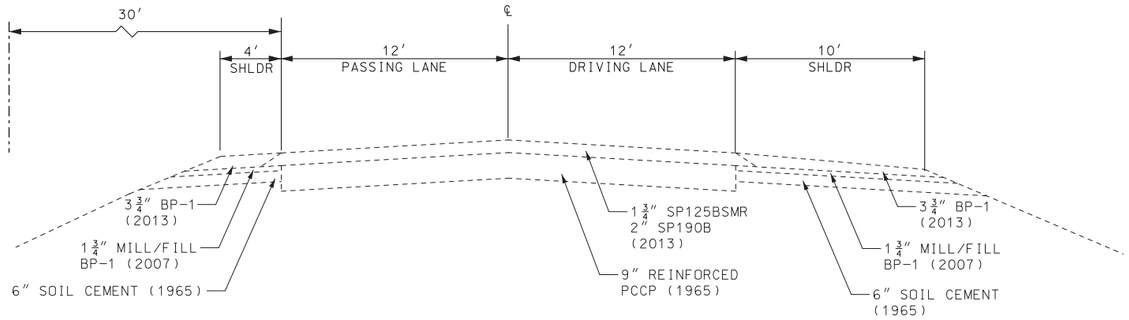

TYPICAL SECTION

EXISTING I-55 NBL
LOG MILE 66.203 TO LOG MILE 80.956

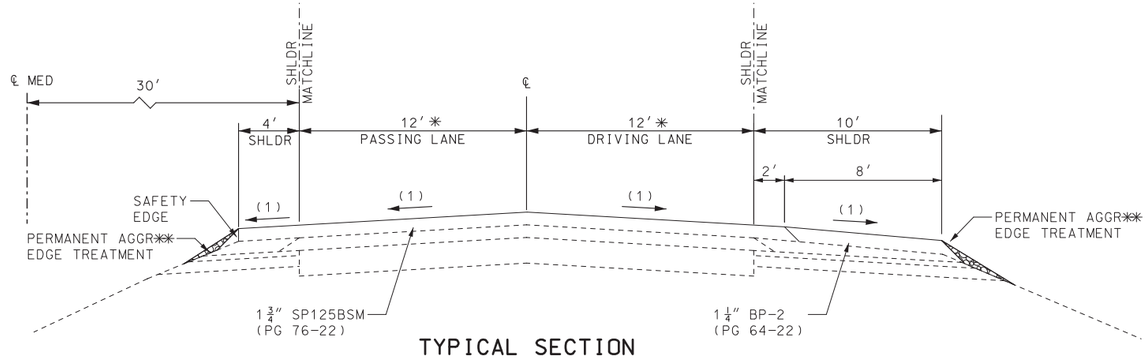

TYPICAL SECTION

PROPOSED I-55 NBL✳
LOG MILE 66.203 TO LOG MILE 80.956

✳ SCRATCH MILL ALL NORTHBOUND LANES

✳✳ STRIP OFF VEGETATION BEFORE PLACING PERMANENT AGGR EDGE TREATMENT

NOTE:

LOG MILES DO NOT NECESSARILY COINCIDE WITH EMERGENCY REFERENCE MARKERS

(1) MATCH EXISTING CROSS-SLOPE

DRAWING NOT TO SCALE. FOLLOW DIMENSIONS.

STATE OF MISSOURI
TIMOTHY CHRISTOPHER PICKETT
NUMBER PE-2017000351
PROFESSIONAL ENGINEER

THIS SHEET HAS BEEN SIGNED, SEALED AND DATED ELECTRONICALLY.

DATE PREPARED	5/28/2020
ROUTE	I-55
STATE	MO
DISTRICT	SE
SHEET NO.	2
COUNTY	SCOTT
JOB NO.	J9I3545
CONTRACT ID.	
PROJECT NO.	
BRIDGE NO.	

DATE	DESCRIPTION

MISSOURI HIGHWAYS AND TRANSPORTATION COMMISSION
105 WEST CAPITOL
JEFFERSON CITY, MO 65102
1-888-ASK-MODOT (1-888-275-6636)

TYPICAL SECTION
SHEET 1 OF 3

IF A SEAL IS PRESENT ON THIS SHEET IT HAS BEEN ELECTRONICALLY SEALED AND DATED.

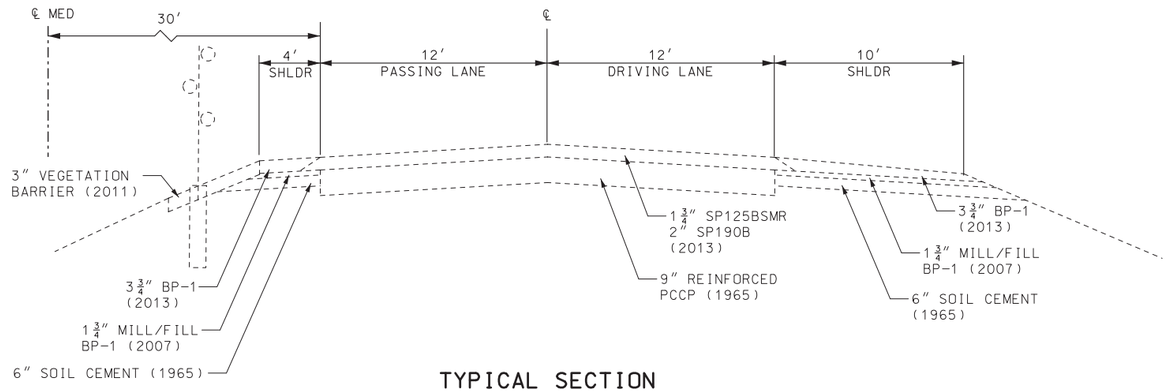

TYPICAL SECTION

EXISTING I-55 SBL
LOG MILE 129.052 TO LOG MILE 143.650

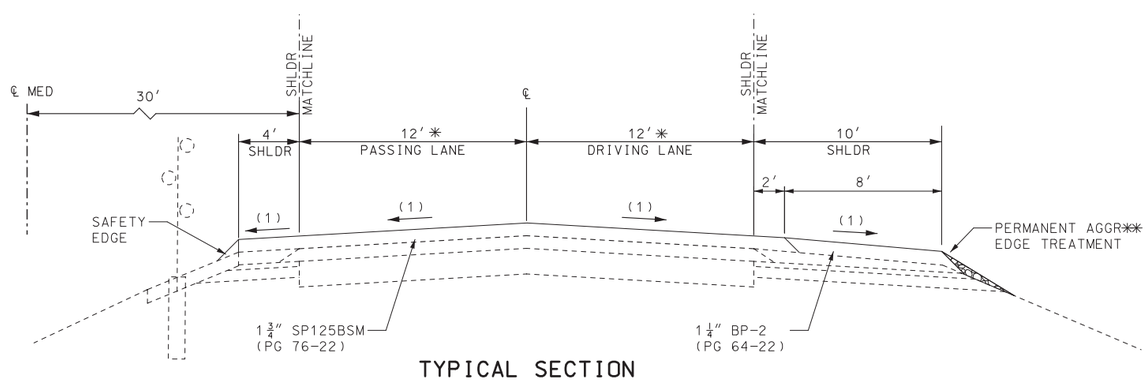

TYPICAL SECTION

PROPOSED I-55 SBL✳
LOG MILE 129.052 TO LOG MILE 143.650

✳ SCRATCH MILL ALL SOUTHBOUND LANES

✳✳ STRIP OFF VEGETATION BEFORE PLACING PERMANENT AGGR EDGE TREATMENT

NOTE:

LOG MILES DO NOT NECESSARILY COINCIDE WITH EMERGENCY REFERENCE MARKERS

(1) MATCH EXISTING CROSS-SLOPE

DRAWING NOT TO SCALE. FOLLOW DIMENSIONS.

STATE OF MISSOURI
TIMOTHY CHRISTOPHER PICKETT
NUMBER PE-2017000351
PROFESSIONAL ENGINEER

THIS SHEET HAS BEEN SIGNED, SEALED AND DATED ELECTRONICALLY.

DATE PREPARED	5/28/2020
ROUTE	I-55
STATE	MO
DISTRICT	SE
SHEET NO.	2
COUNTY	SCOTT
JOB NO.	J9I3545
CONTRACT ID.	
PROJECT NO.	
BRIDGE NO.	

DATE	DESCRIPTION

MISSOURI HIGHWAYS AND TRANSPORTATION COMMISSION
105 WEST CAPITOL
JEFFERSON CITY, MO 65102
1-888-ASK-MODOT (1-888-275-6636)

TYPICAL SECTION
SHEET 2 OF 3

IF A SEAL IS PRESENT ON THIS SHEET IT HAS BEEN ELECTRONICALLY SEALED AND DATED.

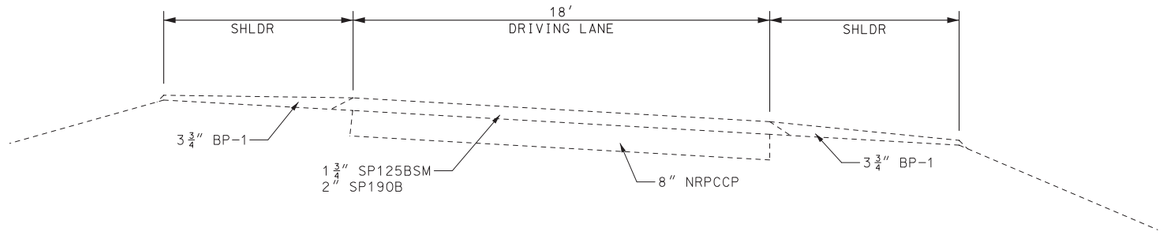

TYPICAL SECTION
EXISTING ON/OFF-RAMP

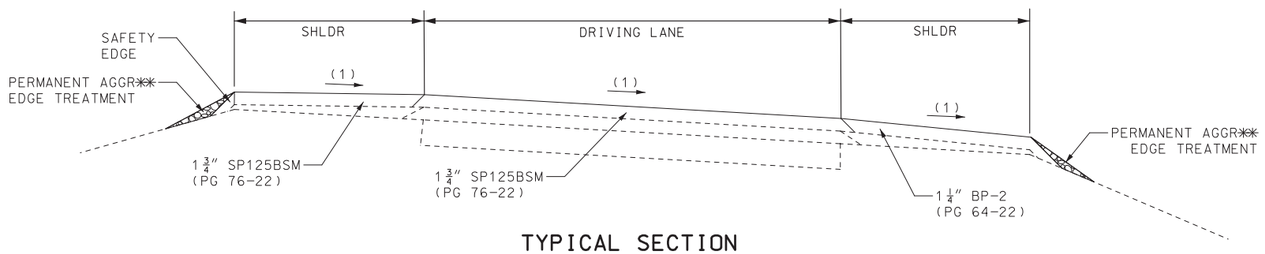

TYPICAL SECTION
PROPOSED ON/OFF-RAMP

RTE HH SB OFF RAMP
RTE HH NB OFF RAMP
RTE HH NB ON RAMP

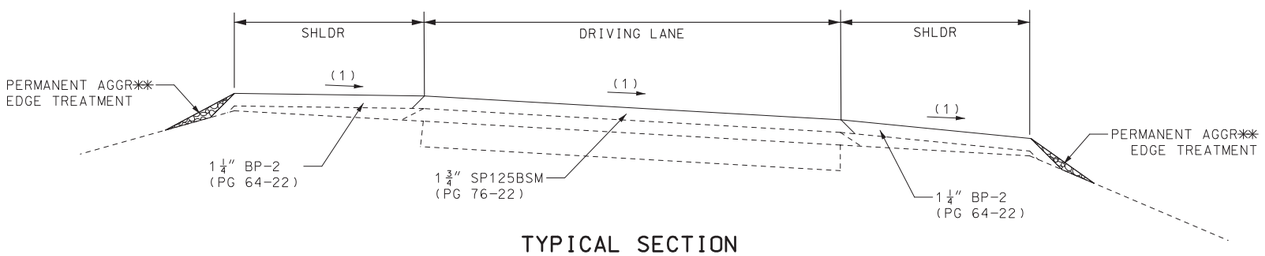

✱✱ STRIP OFF VEGETATION BEFORE PLACING PERMANENT AGGR EDGE TREATMENT

TYPICAL SECTION
PROPOSED ON/OFF-RAMP

RTE HH SB ON RAMP
US 62 SB ON RAMP
MO 77 NB OFF RAMP
US 62 NB OFF RAMP

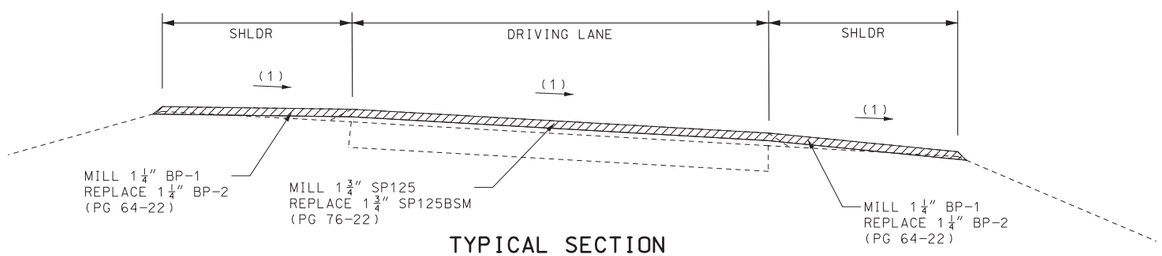

TYPICAL SECTION
PROPOSED ON/OFF-RAMP

US 62 SB OFF RAMP
US 62 SB ON RAMP
US 62 NB OFF RAMP
US 62 NB ON RAMP

(1) MATCH EXISTING SLOPE AND SUPERELEVATION

DRAWING NOT TO SCALE. FOLLOW DIMENSIONS.

STATE OF MISSOURI
TIMOTHY CHRISTOPHER PICKETT
NUMBER PE-2017000351
PROFESSIONAL ENGINEER

THIS SHEET HAS BEEN SIGNED, SEALED AND DATED ELECTRONICALLY.

DATE PREPARED	
5/28/2020	
ROUTE: I-55	STATE: MO
DISTRICT: SE	SHEET NO.: 2
COUNTY: SCOTT	
JOB NO.: J9I3545	
CONTRACT ID.	
PROJECT NO.	
BRIDGE NO.	

DATE	DESCRIPTION

MISSOURI HIGHWAYS AND TRANSPORTATION COMMISSION
105 WEST CAPITOL
JEFFERSON CITY, MO 65102
1-888-ASK-MODOT (1-888-275-6636)

TYPICAL SECTION
SHEET 3 OF 3

IF A SEAL IS PRESENT ON THIS SHEET IT HAS BEEN ELECTRONICALLY SEALED AND DATED.

MOBILIZATION
LUMP SUM 1

REMOVAL OF IMPROVEMENTS			
LOG MILE	LOCATION	DESCRIPTION	REMARKS
67.367	RT OF ℄ NBL	425′ GUARDRAIL, 1 CET, 1 END ANCHOR	I-55
67.474	RT OF ℄ NBL	1587.5′ GUARDRAIL, 1 CET, 2 TRANS SECTIONS, 1 END ANCHOR	A0938
67.474	LT OF ℄ NBL	25′ GUARDRAIL, 1 CET, 1 TRANS SECTIONS	A0938
69.379	LT OF ℄ NBL	BULLNOSE	ROUTE HH BULLNOSE
71.906	LT OF ℄ NBL	BULLNOSE	ROUTE H BULLNOSE
71.906	RT OF ℄ NBL	350′ GUARDRAIL, 1 CET, 1 END ANCHOR	ROUTE H OVERPASS
74.566	RT OF ℄ NBL	125′ GUARDRAIL, 1 CET, 1 END ANCHOR	BOX CULVERT
75.416	RT OF ℄ NBL	1800′ GUARDRAIL, 1 CET, 2 TRANS SECTIONS, 1 END ANCHOR	A0913
75.416	RT OF ℄ NBL	1800′ ASPHALT CURB	A0913 (SOUTH AND NORTH SIDE)
75.416	LT OF ℄ NBL	387.5′ GUARDRAIL, 1 CET, 1 TRANS SECTIONS	A0913
77.554	RT OF ℄ NBL	75′ GUARDRAIL, 1 CET, 1 END ANCHOR	MESSAGE BOARD
77.618	LT OF ℄ NBL	BULLNOSE	ROUTE C BULLNOSE
77.618	RT OF ℄ NBL	250′ GUARDRAIL, 1 CET, 1 END ANCHOR	ROUTE C OVERPASS
80.781	RT OF ℄ NBL	662.5′ GUARDRAIL, 1 CET, 1 END ANCHOR	MO 77 OFF RAMP RIGHT SIDE
80.781	RT OF ℄ NBL	512.5′ GUARDRAIL, 1 CET, 1 TRANS SECTIONS	MO 77 OFF RAMP LEFT SIDE
132.225	LT OF ℄ SBL	BULLNOSE	ROUTE C BULLNOSE
132.225	RT OF ℄ SBL	262.5′ GUARDRAIL, 1 CET, 1 TRANS SECTIONS	ROUTE C OVERPASS
134.356	RT OF ℄ SBL	1825′ GUARDRAIL, 1 CET, 2 TRANS SECTIONS, 1 END ANCHOR	A0913
135.356	RT OF ℄ SBL	1825′ ASPHALT CURB	A0913 (NORTH AND SOUTH SIDE)
134.356	LT OF ℄ SBL	25′ GUARDRAIL, 1 CET, 1 TRANS SECTIONS	A0913
135.266	RT OF ℄ SBL	100′ GUARDRAIL, 1 CET, 1 END ANCHOR	BOX CULVERT
137.950	LT OF ℄ SBL	BULLNOSE	ROUTE H BULLNOSE
137.950	RT OF ℄ SBL	287.5′ GUARDRAIL, 1 CET, 1 END ANCHOR	ROUTE H OVERPASS
138.880	RT OF ℄ SBL	125′ GUARDRAIL, 1 CET, 1 END ANCHOR	BOX CULVERT
140.465	LT OF ℄ SBL	BULLNOSE	ROUTE HH BULLNOSE
142.329	RT OF ℄ SBL	1625′ GUARDRAIL, 1 CET, 2 TRANS SECTIONS, 1 END ANCHOR	A0938
142.329	LT OF ℄ SBL	25′ GUARDRAIL, 1 CET, 1 TRANS SECTIONS	A0938
142.416	RT OF ℄ SBL	250′ GUARDRAIL, 1 CET, 1 END ANCHOR	US 62 OFF RAMP
142.474	RT OF ℄ SBL	500′ GUARDRAIL, 1 CET, 1 END ANCHOR	I-55
143.295	LT/RT OF ℄ SBL	150′ GUARDRAIL, 1 CET, 1 END ANCHOR	TRUSS SIGN
		LUMP SUM 1	

STATE OF MISSOURI
TIMOTHY CHRISTOPHER PICKETT
NUMBER PE-2017000351
PROFESSIONAL ENGINEER

THIS SHEET HAS BEEN SIGNED, SEALED AND DATED ELECTRONICALLY.

DATE PREPARED
5/28/2020

ROUTE	STATE
I-55	MO
DISTRICT	SHEET NO.
SE	3

COUNTY
SCOTT

JOB NO.
J9I3545

CONTRACT ID.

PROJECT NO.

BRIDGE NO.

DATE	DESCRIPTION

IF A SEAL IS PRESENT ON THIS SHEET IT HAS BEEN ELECTRONICALLY SEALED AND DATED.

MISSOURI HIGHWAYS AND TRANSPORTATION COMMISSION
105 WEST CAPITOL
JEFFERSON CITY, MO 65102
1-888-ASK-MODOT (1-888-275-6636)

SUMMARY OF QUANTITIES
SHEET 1 OF 6

MAINLINE ASPHALT PAVEMENT

NBL LOG MILE	NBL LOG MILE	LOCATION	LENGTH FT	SP125 (1.75") WIDTH FT	BP-2 (1.25") WIDTH FT	SP125BSM CY	BP-2 CY	TACK COAT SY	PERMANENT AGGREGATE EDGE TREATMENT CY	BITUMINOUS FOG SEAL SY	REMARKS
66.203	66.280	RT/LT OF ℄ NBL	407	30	8	65.88	12.55	1716.59	7.53	180.70	MILL AND REPLACE (BEGIN NBL)
66.280	66.313	RT/LT OF ℄ NBL	175	30	8	28.36	5.40	738.89	3.24	77.78	DEPTH TRANSITION
66.313	67.389	RT/LT OF ℄ NBL	5680	30	8	920.33	175.30	23981.21	105.19	2524.34	1.75" OVERLAY
67.389	67.422	RT/LT OF ℄ NBL	175	30	8	28.36	5.40	738.89	3.24	77.78	DEPTH TRANSITION
67.422	67.474	RT/LT OF ℄ NBL	275	30	8	44.49	8.47	1159.25	5.09	122.02	MILL AND REPLACE TO SOUTH END OF BRIDGE A0938
67.527	67.560	RT/LT OF ℄ NBL	175	30	8	28.36	5.40	738.89	3.24	77.78	NORTH END OF BRIDGE A0938 TO DEPTH TRANSITION
67.560	75.383	RT/LT OF ℄ NBL	41305	30	8	6692.90	1274.84	174397.88	764.90	18357.68	1.75" OVERLAY
75.383	75.416	RT/LT OF ℄ NBL	175	30	8	28.36	5.40	738.89	3.24	77.78	DEPTH TRANSITION TO SOUTH END OF BRIDGE A0913
75.416	75.465	RT/LT OF ℄ NBL	259	30	8	41.97	7.99	1093.56			BRIDGE A0913
75.465	75.498	RT/LT OF ℄ NBL	175	30	8	28.36	5.40	738.89	3.24	77.78	NORTH END OF BRIDGE A0913 TO DEPTH TRANSITION
75.498	80.923	RT/LT OF ℄ NBL	28642	30	8	4641.10	884.02	120933.73	530.41	12729.86	1.75" OVERLAY
80.923	80.956	RT/LT OF ℄ NBL	175	30	8	28.36	5.40	738.89	3.24	77.78	DEPTH TRANSITION (END NBL)
66.280	67.422	RT/LT OF ℄ NBL	6030	24		223.32		16079.36			" SCRATCH MILL
67.527	80.956	RT/LT OF ℄ NBL	70905	24		2626.12		189080.32			" SCRATCH MILL
		LT OF ℄ NBL				309.00					SAFETY EDGE
SBL LOG MILE	SBL LOG MILE										
129.052	129.085	RT/LT OF ℄ SBL	175	30	8	28.36	5.40	738.89	1.35	38.89	DEPTH TRANSITION (BEGIN SBL)
129.085	134.323	RT/LT OF ℄ SBL	27655	30	8	4481.15	853.55	116766.06	213.39	6145.58	1.75" OVERLAY
134.323	134.356	RT/LT OF ℄ SBL	175	30	8	28.36	5.40	738.89	1.35	38.89	DEPTH TRANSITION TO NORTH END OF BRIDGE A0913
134.356	134.405	RT/LT OF ℄ SBL	259	30	8	41.97	7.99	1093.56			BRIDGE A0913
134.405	134.438	RT/LT OF ℄ SBL	175	30	8	28.36	5.40	738.89	1.35	38.89	SOUTH END OF BRIDGE A0913 TO DEPTH TRANSITION
134.438	142.296	RT/LT OF ℄ SBL	41488	30	8	6722.66	1280.51	175173.41	320.13	9219.65	1.75" OVERLAY
142.296	142.329	RT/LT OF ℄ SBL	175	30	8	28.36	5.40	738.89	1.35	38.89	DEPTH TRANSITION TO NORTH END OF BRIDGE A0938
142.382	142.436	RT/LT OF ℄ SBL	286	30	8	46.34	8.83	1207.39	2.21	63.55	SOUTH END OF BRIDGE A0938 TO MILL AND REPLACE
142.436	142.469	RT/LT OF ℄ SBL	175	30	8	28.36	5.40	738.89	1.35	38.89	DEPTH TRANSITION
142.469	143.577	RT/LT OF ℄ SBL	5849	30	8	947.71	180.52	24694.60	45.13	1299.72	1.75" OVERLAY
143.577	143.610	RT/LT OF ℄ SBL	175	30	8	28.36	5.40	738.89	1.35	38.89	DEPTH TRANSITION
143.610	143.650	RT/LT OF ℄ SBL	211	30	8	34.22	6.52	891.73	1.63	46.93	MILL AND REPLACE (END SBL)
129.052	142.329	RT/LT OF ℄ SBL	70103	24		2596.39		186940.16			" SCRATCH MILL
142.436	143.610	RT/LT OF ℄ SBL	6199	24		229.58		16529.92			" SCRATCH MILL
		RT/LT OF ℄ SBL				305.00					SAFETY EDGE
					TOTAL	31310.45	4765.89	1060605.41	2023.15	51390.05	
						TONS	TONS	GAL	TONS	GAL	
						61525.0	9712.9	93341.60	3540.51	12847.51	
					75 tons/mile for irregularities	2193.4					
					USE	63718.4	9712.9	93342	3540.5	12848	

SP125BSM QUANTITY EST @ 1.965 TONS/CY
BP-2 QUANTITY EST @ 2.038 TONS/CY
TACK QUANTITY EST @ 0.08 GAL/SY FOR OVERLAY AND EST @ 0.10 GAL/SY FOR COLDMILLING
BITUMINOUS FOG SEAL QUANTITY EST @ 0.25 GAL/SY
PERMANENT AGG EDGE TREATMENT EST @ 1.75 TONS/CY

LOG MILES ARE APPROXIMATE. EXACT LOCATIONS TO BE DETERMINED BY ENGINEER

STATE OF MISSOURI
TIMOTHY CHRISTOPHER PICKETT
NUMBER PE-2017000351
PROFESSIONAL ENGINEER

THIS SHEET HAS BEEN SIGNED, SEALED AND DATED ELECTRONICALLY.

DATE PREPARED 5/28/2020

ROUTE	STATE
I-55	MO
DISTRICT	SHEET NO.
SE	3

COUNTY SCOTT

JOB NO. J9I3545

CONTRACT ID.

PROJECT NO.

BRIDGE NO.

DATE	DESCRIPTION

IF A SEAL IS PRESENT ON THIS SHEET IT HAS BEEN ELECTRONICALLY SEALED AND DATED.

MISSOURI HIGHWAYS AND TRANSPORTATION COMMISSION
105 WEST CAPITOL
JEFFERSON CITY, MO 65102
1-888-ASK-MODOT (1-888-275-6636)

SUMMARY OF QUANTITIES
SHEET 2 OF 6

RAMP ASPHALT PAVEMENT

LOG MILE	LOCATION	LENGTH (FT)	SP125 (1.75") WIDTH (FT)	LT SHLDR WIDTH (FT)	RT SHLDR WIDTH (FT)	SP125BSM 1.75" (CY)	BP-2 1.25" (CY)	TACK COAT (SY)	PERMANENT AGGREGATE EDGE TREATMENT CY	BITUMINOUS FOG SEAL SY	REMARKS
I-57 S (EXIT 66B)	RT OF ℄ NBL	VAR	VAR			40.05		823.89			I-57 S OFF RAMP DECEL LANE
	RT OF ℄ NBL	VAR	VAR			42.40		872.22			I-57 S ON RAMP ACCEL LANE AND TAPER
US 62 (EXIT 67)	RT OF ℄ NBL	VAR	VAR			48.88		1005.56			US 62 OFF RAMP TAPER
	RAMP BL	VAR	18	7	6	143.13	52.23	2944.44	23.07	474.44	US 62 OFF RAMP (MILL AND REPLACE)
	RAMP BL	VAR	21	6	6	142.86	22.11	2955.56	10.31	212.22	US 62 ON RAMP (MILL AND REPLACE)
	RT OF ℄ NBL	VAR	VAR			24.04		411.11			US 62 ON RAMP ACCEL LANE
RTE HH (EXIT 69)	RT OF ℄ NBL	VAR	VAR			72.38		1488.89			RTE HH OFF RAMP TAPER
	RAMP BL	VAR	19	4	8	21.58	5.56	363.89	3.88	80.00	RTE HH OFF RAMP
	RAMP BL	VAR	19	4	8	25.87	6.48	438.89	4.54	93.34	RTE HH ON RAMP
	RT OF ℄ NBL	VAR	VAR			61.84		1272.22			RTE HH ON RAMP ACCEL LANE AND TAPER
MO 77 (EXIT 80)	RT OF ℄ NBL	VAR	VAR			38.62		794.44			MO 77 OFF RAMP TAPER
	RAMP BL	VAR	18	6	7	88.31	42.64	1816.67	18.36	377.78	MO 77 OFF RAMP
RTE HH (EXIT 69)	RT OF ℄ SBL	VAR	VAR			65.90		1355.56			RTE HH OFF RAMP TAPER
	RAMP BL	VAR	19	4	8	22.92	5.74	388.89	4.02	82.66	RTE HH OFF RAMP
	RAMP BL	VAR	19	5	8	19.44	9.68	400.00	4.16	85.78	RTE HH ON RAMP
	RT OF ℄ SBL	VAR	VAR			50.50		1038.89			RTE HH ON RAMP ACCEL LANE AND TAPER
US 62 (EXIT 67)	RT OF ℄ SBL	VAR	VAR			40.24		757.22			US 62 OFF RAMP TAPER
	RAMP BL	VAR	22	8	6	104.78	21.88	2155.56	8.43	173.33	US 62 OFF RAMP (MILL AND REPLACE)
	RAMP BL	VAR	18	7	6	120.99	46.91	2488.89	20.52	422.22	US 62 ON RAMP (MILL AND REPLACE)
	RT OF ℄ SBL	VAR	VAR			42.13		866.11			US 62 ON RAMP ACCEL LANE AND TAPER
US 60 W (EXIT 66B)	RT OF ℄ SBL	VAR	VAR			53.47		1100.00			US 60 W OFF RAMP TAPER
	RT OF ℄ SBL	VAR	VAR			23.39		481.11			I-57 S ON RAMP ACCEL LANE
					TOTAL	1293.72	213.23	26220.01	97.29	2001.77	

	TONS	TONS	GAL	TONS	GAL
USE	2542.2	434.6	2308	170.3	500

SP125BSM QUANTITY EST @ 1.965 TONS/CY
BP-2 QUANTITY EST @ 2.038 TONS/CY
TACK QUANTITY EST @ 0.08 GAL/SY FOR OVERLAY AND EST @ 0.10 GAL/SY FOR COLDMILLING
BITUMINOUS FOG SEAL QUANTITY EST @ 0.25 GAL/SY
PERMANENT AGG EDGE TREATMENT EST @ 1.75 TONS/CY

PAVEMENT REPAIR

LOG MILE	LOCATION	LENGTH FT	WIDTH FT	FULL DEPTH SY	SUBGRADE COMPACTION FOR PAVT REPAIR SY	4" TYPE 1 OR 5 BASE FOR PAVT REPAIR SY	FULL DEPTH PAVEMENT REPAIR SAW CUT FT	DOWEL BARS DRILLED EA	REMARKS
XX.XXX	LT OF ℄ NBL	6	12	8.00	0.8	0.8	36.0	20.0	
XX.XXX	LT/RT OF ℄ SBL	6	24	16.00	1.6	1.6	60.0	40.0	
XX.XXX	LT/RT OF ℄ SBL	6	24	16.00	1.6	1.6	60.0	40.0	
XX.XXX	LT OF ℄ SBL	6	12	8.00	0.8	0.8	36.0	20.0	
			TOTAL	48.0	5	5	204	120	

SUBGRADE COMPACTION FOR PAVEMENT REPAIR AND 4" TYPE 1 OR 5 BASE FOR PAVEMENT REPAIR QUANTITIES ARE CALCULATED AT 10% OF THE TOTAL AREA OF FULL DEPTH PAVEMENT REPAIR.
ALL LOCATIONS AND PAVEMENT REPAIR SIZES ARE APPROXIMATE AND MAY BE ADJUSTED AS DIRECTED BY THE ENGINEER.
LOG MILES ARE APPROXIMATE. EXACT LOCATIONS TO BE DETERMINDED BY THE ENGINEER.
✳ SP125 EST @ 1.965 TONS/CY

TYPE B CONCRETE BARRIER

LOG MILE	LOCATION	TYPE B CONCRETE BARRIER LF	REMARKS
74.566	RT OF ℄ NBL	50.0	BOX CULVERT
77.618	RT OF ℄ NBL	35.0	RTE C OVERPASS
132.225	RT OF ℄ SBL	35.0	RTE C OVERPASS
135.266	RT OF ℄ SBL	50.0	BOX CULVERT
138.880	RT OF ℄ SBL	40.0	BOX CULVERT
143.295	LT/RT OF ℄ SBL	60.0	TRUSS SIGN 30' EACH SIDE
	TOTAL	270	

LOG MILES ARE APPROXIMATE. EXACT LOCATIONS TO BE DETERMINED BY ENGINEER

STATE OF MISSOURI
TIMOTHY CHRISTOPHER PICKETT
NUMBER PE-2017000351
PROFESSIONAL ENGINEER

THIS SHEET HAS BEEN SIGNED, SEALED AND DATED ELECTRONICALLY.

DATE PREPARED 5/28/2020
ROUTE I-55 | STATE MO
DISTRICT SE | SHEET NO. 3
COUNTY SCOTT
JOB NO. J9I3545
CONTRACT ID.
PROJECT NO.
BRIDGE NO.

DATE	DESCRIPTION

IF A SEAL IS PRESENT ON THIS SHEET IT HAS BEEN ELECTRONICALLY SEALED AND DATED.

MISSOURI HIGHWAYS AND TRANSPORTATION COMMISSION
105 WEST CAPITOL
JEFFERSON CITY, MO 65102
1-888-ASK-MODOT (1-888-275-6636)

SUMMARY OF QUANTITIES
SHEET 3 OF 6

TEMPORARY PAVEMENT MARKING PAINT
LUMP SUM 1

PAVEMENT MARKING PAINT

LOG MILE	LOG MILE	LOCATION	HIGH BUILD WATERBORNE PAVEMENT MARKING 6" YELLOW LF	6" WHITE LF	12" WHITE LF	PREFORMED THERMOPLASTIC PAVEMENT MARKING 24" WHITE LF	WRONG WAY ARROW WHITE EACH	REMARKS
66.203	80.956	I-55 NBL	81670.8	102117.8	1683.0	12.0		INCLUDES BRIDGES, RAMPS, DECEL, AND ACCEL
129.052	143.650	I-55 SBL	79339.4	99523.8	1545.0	12.0		INCLUDES BRIDGES, RAMPS, DECEL, AND ACCEL
		I-55 NBL					1.0	US 62 OFF RAMP
		I-55 NBL					1.0	MO 77 OFF RAMP
		I-55 SBL					1.0	US 62 OFF RAMP
		TOTAL	161010	201642	3228	24	3	

EXACT LOCATIONS TO BE DETERMINED BY THE CONTRACTOR IN ACCORDANCE WITH THE PAVEMENT MARKING LOG JSP.

TEMPORARY REMOVALBLE MARKING PAINT & PAINT REMOVAL

LOCATION	TEMPORARY REMOVABLE MARKING TAPE 4" WHITE LF	PAVEMENT MARKING REMOVAL LF	REMARKS
I-55 NBL & SBL	8876.0	8876.0	TRAFFIC CONTROL SHEET 3 OF 7
TOTAL	8876	8876	

COLDMILLING

LOG MILE	LOG MILE	LOCATION	LENGTH FT	WIDTH FT	MODIFIED COLDMILLING FOR DEPTH TRANSITIONS SY	COLDMILLING BITUMINOUS PAVEMENT FOR REMOVAL OF SURFACING 3" OR LESS SY	REMARKS
66.203	66.280	RT/LT OF ℄ NBL	407	VAR		2277.8	MILL AND REPLACE (BEGIN NBL)
66.280	66.313	RT/LT OF ℄ NBL	175	38	738.9		DEPTH TRANSITION
67.389	67.422	RT/LT OF ℄ NBL	175	38	738.9		DEPTH TRANSITION
67.422	67.474	RT/LT OF ℄ NBL	275	VAR		1366.67	MILL AND REPLACE TO SOUTH END OF BRIDGE A0938
67.527	67.560	RT/LT OF ℄ NBL	175	38	738.9		NORTH END OF BRIDGE A0938 TO DEPTH TRANSITION
75.383	75.416	RT/LT OF ℄ NBL	175	38	738.9		DEPTH TRANSITION TO SOUTH END OF BRIDGE A0913
75.416	75.465	RT/LT OF ℄ NBL	259	38		1093.6	BRIDGE A0913
75.465	75.498	RT/LT OF ℄ NBL	175	38	738.9		NORTH END OF BRIDGE A0913 TO DEPTH TRANSITION
80.923	80.956	RT/LT OF ℄ NBL	175	38	738.9		DEPTH TRANSITION (END NBL)
66.280	67.422	RT/LT OF ℄ NBL	6030	24		16079.4	" SCRATCH MILL
67.527	80.956	RT/LT OF ℄ NBL	70905	24		189080.3	" SCRATCH MILL
129.052	129.085	RT/LT OF ℄ SBL	175	38	738.9		DEPTH TRANSITION (BEGIN SBL)
134.323	134.356	RT/LT OF ℄ SBL	175	38	738.9		DEPTH TRANSITION TO NORTH END OF BRIDGE A0913
134.356	134.405	RT/LT OF ℄ SBL	259	38		1093.6	BRIDGE A0913
134.405	134.438	RT/LT OF ℄ SBL	175	38	738.9		SOUTH END OF BRIDGE A0913 TO DEPTH TRANSITION
142.296	142.329	RT/LT OF ℄ SBL	175	38	738.9		DEPTH TRANSITION TO NORTH END OF BRIDGE A0938
142.382	142.436	RT/LT OF ℄ SBL	286	VAR		1494.4	SOUTH END OF BRIDGE A0938 TO MILL AND REPLACE
142.436	142.469	RT/LT OF ℄ SBL	175	38	738.9		DEPTH TRANSITION
143.577	143.610	RT/LT OF ℄ SBL	175	38	738.9		DEPTH TRANSITION
143.610	143.650	RT/LT OF ℄ SBL	211	VAR		1111.1	MILL AND REPLACE (END SBL)
129.052	142.329	RT/LT OF ℄ SBL	70103	24		186940.2	" SCRATCH MILL
142.436	143.610	RT/LT OF ℄ SBL	6199	24		16529.9	" SCRATCH MILL
77.618		RT/LT OF ℄ NBL	900	38	3800.0		OVERPASS AT BRIDGE R0118
132.225		RT/LT OF ℄ SBL	900	38	3800.0		OVERPASS AT BRIDGE R0118
		RT OF ℄ NBL	87.5	31	301.4		I-57 S ON RAMP
		RT OF ℄ NBL	87.5	29	281.9		US 62 OFF RAMP
		RT OF ℄ NBL	VAR	VAR		1982.2	US 62 OFF RAMP
		RT OF ℄ NBL	VAR	VAR		3575.6	US 62 ON RAMP
		RT OF ℄ NBL	87.5	32	311.1		RTE HH OFF RAMP
		RT OF ℄ NBL	87.5	29	281.9		RTE HH ON RAMP
		RT OF ℄ NBL	87.5	30	291.7		MO 77 OFF RAMP
		RT OF ℄ NBL	VAR	VAR		422.2	MO 77 OFF RAMP
		RT OF ℄ SBL	87.5	30	291.7		RTE HH OFF RAMP
		RT OF ℄ SBL	87.5	30	291.7		RTE HH ON RAMP
		RT OF ℄ SBL	VAR	VAR		2785.6	US 62 OFF RAMP
		RT OF ℄ SBL	87.5	29	281.9		US 62 ON RAMP
		RT OF ℄ SBL	VAR	VAR		1228.9	US 62 ON RAMP
		RT OF ℄ SBL	87.5	30	291.7		US 60 W OFF RAMP
				TOTAL	19092	427061	

LOG MILES ARE APPROXIMATE. EXACT LOCATIONS TO BE DETERMINED BY ENGINEER

STATE OF MISSOURI
TIMOTHY CHRISTOPHER PICKETT
NUMBER PE-2017000351
PROFESSIONAL ENGINEER

THIS SHEET HAS BEEN SIGNED, SEALED AND DATED ELECTRONICALLY.

DATE PREPARED 5/28/2020

ROUTE I-55 | STATE MO
DISTRICT SE | SHEET NO. 3
COUNTY SCOTT
JOB NO. J9I3545
CONTRACT ID.
PROJECT NO.
BRIDGE NO.

DESCRIPTION | DATE

MISSOURI HIGHWAYS AND TRANSPORTATION COMMISSION
105 WEST CAPITOL
JEFFERSON CITY, MO 65102
1-888-ASK-MODOT (1-888-275-6636)

SUMMARY OF QUANTITIES
SHEET 4 OF 6

IF A SEAL IS PRESENT ON THIS SHEET IT HAS BEEN ELECTRONICALLY SEALED AND DATED.

RUMBLE STRIPS

LOG MILE	LOG MILE	LOCATION	EXCEPTIONS FT	SHOULDER RUMBLE STRIP STA	REMARKS
66.203	80.956	LT/RT OF ℄ NBL	538.00	1547.16	EXCEPTIONS BR# A0938, A0913
129.052	143.650	LT/RT OF ℄ SBL	538.00	1530.79	EXCEPTIONS BR# A0938, A0913
			TOTAL	3078.0	

LOG MILES ARE APPROXIMATE. EXACT LOCATIONS TO BE DETERMINED BY ENGINEER

STEEL BAR DAM

LOG MILE	LOCATION	STEEL BAR DAM EACH	REMARKS
75.416	NBL	1.0	A0913
134.356	SBL	1.0	A0913
	TOTAL	2	

LOG MILES ARE APPROXIMATE. EXACT LOCATIONS TO BE DETERMINED BY ENGINEER

GUARDRAIL

LOG MILE	LOCATION	MGS BRIDGE APPROACH TRANSITION SECTION EA	MGS GUARDRAIL LF	MASH CRASHWORTHY END TERMINAL EA	MGS END ANCHOR EA	MODIFIED SHAPING SLOPES CLASS III LF	REMARKS
67.367	RT OF ℄ NBL		425.0	1	1		I-55
67.474	RT OF ℄ NBL	2	1587.5	1	1		A0938
67.474	LT OF ℄ NBL	1	25.0	1			A0938
69.379	LT OF ℄ NBL		262.5	1	1		ROUTE HH BULLNOSE
71.906	LT OF ℄ NBL		262.5	1	1		ROUTE H BULLNOSE
71.906	RT OF ℄ NBL	2	275.0	1	1		ROUTE H OVERPASS
74.566	RT OF ℄ NBL	2		1	1		BOX CULVERT
75.416	RT OF ℄ NBL	2	2525.0	1	1	730.0	A0913*
75.416	LT OF ℄ NBL	1	387.5	1			A0913
77.554	RT OF ℄ NBL		75.0	1	1		MESSAGE BOARD
77.618	LT OF ℄ NBL		262.5	1	1		ROUTE C BULLNOSE
77.618	RT OF ℄ NBL	2	137.5	1	1		ROUTE C OVERPASS
80.781	RT OF ℄ NBL		662.5	1	1		MO 77 OFF RAMP RIGHT SIDE
80.781	RT OF ℄ NBL	1	512.5	1			MO 77 OFF RAMP LEFT SIDE
132.225	LT OF ℄ SBL		262.5	1	1		ROUTE C BULLNOSE
132.225	RT OF ℄ SBL	2	150.0	1	1		ROUTE C OVERPASS
134.356	RT OF ℄ SBL	2	2525.0	1	1	700.0	A0913*
134.356	LT OF ℄ SBL	1	25.0	1			A0913
135.266	RT OF ℄ SBL	2		1	1		BOX CULVERT
137.950	LT OF ℄ SBL		262.5	1	1		ROUTE H BULLNOSE
137.950	RT OF ℄ SBL	2	262.5	1	1		ROUTE H OVERPASS
138.880	RT OF ℄ SBL	2		1	1		BOX CULVERT
140.465	LT OF ℄ SBL		262.5	1	1		ROUTE HH BULLNOSE
142.329	RT OF ℄ SBL	2	1625.0	1	1		A0938
142.329	LT OF ℄ SBL	1	25.0	1			A0938
142.416	RT OF ℄ SBL		250.0	1	1		US 62 OFF RAMP
142.474	RT OF ℄ SBL		500.0	1	1		I-55
143.295	LT/RT OF ℄ SBL	4		2	2		TRUSS SIGN
	TOTAL	31	13550	29	24	1430	

*GUARDRAIL LENGTH TO BE EXTENDED TO ROCK LET DOWN AND ASPHALT CURB TO BE REMOVED
PLACE NEW GUARDRAIL IN THE SAME LOCATION OF EXISTING GUARDRAIL
GUARDRAIL FLARE RATE IS 24:1
LOG MILES ARE APPROXIMATE. EXACT LOCATIONS TO BE DETERMINED BY ENGINEER

STATE OF MISSOURI
TIMOTHY CHRISTOPHER PICKETT
NUMBER PE-2017000351
PROFESSIONAL ENGINEER

THIS SHEET HAS BEEN SIGNED, SEALED AND DATED ELECTRONICALLY.

DATE PREPARED: 5/28/2020

ROUTE	STATE
I-55	MO
DISTRICT	SHEET NO.
SE	3

COUNTY: SCOTT
JOB NO.: J9I3545
CONTRACT ID.:
PROJECT NO.:
BRIDGE NO.:

DESCRIPTION	DATE

IF A SEAL IS PRESENT ON THIS SHEET IT HAS BEEN ELECTRONICALLY SEALED AND DATED.

MISSOURI HIGHWAYS AND TRANSPORTATION COMMISSION
105 WEST CAPITOL
JEFFERSON CITY, MO 65102
1-888-ASK-MODOT (1-888-275-6636)

SUMMARY OF QUANTITIES
SHEET 5 OF 6

EFFECTIVE: 10-01-2019

SIGN	SIZE IN.	AREA SQ.FT.	QTY EACH	TOTAL AREA SQ.FT.	QTY RELOC EACH	TOTAL RELOC SQ.FT.	SIGN NUM.	DESCRIPTION
WARNING SIGNS								
W01-1L	48X48	16.00						TURN (SYMBOL LEFT ARROW)
W01-1R	48X48	16.00						TURN (SYMBOL RIGHT ARROW)
W01-2L	48X48	16.00						CURVE (SYMBOL LEFT ARROW)
W01-2R	48X48	16.00						CURVE (SYMBOL RIGHT ARROW)
W01-3L	48X48	16.00						REVERSE TURN (SYMBOL LEFT ARROW)
W01-3R	48X48	16.00						REVERSE TURN (SYMBOL RIGHT ARROW)
W01-4L	48X48	16.00						REVERSE CURVE (SYMBOL LEFT ARROW)
W01-4R	48X48	16.00						REVERSE CURVE (SYMBOL RIGHT ARROW)
W01-4bL	48X48	16.00						DOUBLE ARROW REVERSE CURVE (SYMBOL LT ARROWS)
W01-4bR	48X48	16.00						DOUBLE ARROW REVERSE CURVE (SYMBOL RT ARROWS)
W01-4cL	48X48	16.00						TRIPLE ARROW REVERSE CURVE (SYMBOL LT ARROWS)
W01-4cR	48X48	16.00						TRIPLE ARROW REVERSE CURVE (SYMBOL RT ARROWS)
W01-6	60X30	12.50						HORIZONTAL ARROW (SYMBOL)
W01-6a	72X36	18.00						HORIZ. ARROW (SYMBOL ON PERMANENT BARRICADE)
W01-7	60X30	12.50						DOUBLE HEAD HORIZONTAL ARROW (SYMBOL)
W01-7a	72X36	18.00						DOUBLE HEAD HORIZ. ARROW (SYMBOL ON PERM. BARR.)
W01-8	18X24	3.00						CHEVRON (SYMBOL)
W01-8a	30X36	7.50						CHEVRON (SYMBOL FOR DIVIDED HIGHWAYS)
W03-1	48X48	16.00						STOP AHEAD (SYMBOL)
W03-2	**48X48**	**16.00**	**2**	**32.00**				**YIELD AHEAD (SYMBOL)**
W03-3	48X48	16.00						SIGNAL AHEAD (SYMBOL)
W03-4	48X48	16.00						BE PREPARED TO STOP
W03-5	48X48	16.00						SPEED LIMIT AHEAD
W04-1L	48X48	16.00						MERGE (SYMBOL FROM LEFT)
W04-1R	**48X48**	**16.00**	**2**	**32.00**				**MERGE (SYMBOL FROM RIGHT)**
W04-1aL	**48X48**	**16.00**	**6**	**96.00**				**MERGE (ARROW SYMBOL)**
W04-1aR	**48X48**	**16.00**	**6**	**96.00**				**MERGE (ARROW SYMBOL)**
W05-1	**48X48**	**16.00**	**10**	**160.00**				**ROAD/BRIDGE/RAMP NARROWS**
W05-3	48X48	16.00						ONE LANE BRIDGE
W05-5	48X48	16.00						NARROW LANES
W06-1	48X48	16.00						DIVIDED HIGHWAY (SYMBOL)
W06-2	48X48	16.00						DIVIDED HIGHWAY END (SYMBOL)
W06-3	48X48	16.00						TWO WAY TRAFFIC (SYMBOL)
W07-3a	30X24	5.00						NEXT XX MILES (PLAQUE)
W08-1	**48X48**	**16.00**	**29**	**464.00**				**BUMP**
W08-2	48X48	16.00						DIP
W08-3	48X48	16.00						PAVEMENT ENDS
W08-4	48X48	16.00						SOFT SHOULDER
W08-5	48X48	16.00						SLIPPERY WHEN WET (SYMBOL)
W08-6	48X48	16.00						TRUCK CROSSING
W08-6c	48X48	16.00						TRUCK ENTRANCE
W08-7	36X36	9.00						LOOSE GRAVEL
W08-7a	36X36	9.00						FRESH OIL/LOOSE GRAVEL
W08-9	48X48	16.00						LOW SHOULDER
W08-11	**48X48**	**16.00**	**48**	**768.00**				**UNEVEN LANES**
W08-12	**48X48**	**16.00**	**30**	**480.00**				**NO CENTER LINE**
W08-15	**48X48**	**16.00**	**29**	**464.00**				**GROOVED PAVEMENT**
W08-15P	**30X24**	**5.00**	**29**	**145.00**				**MOTORCYCLE (PLAQUE)**
W08-17	**48X48**	**16.00**	**30**	**480.00**				**SHOULDER DROP-OFF (SYMBOL)**
W08-17P	**30X24**	**5.00**	**30**	**150.00**				**SHOULDER DROP-OFF (PLAQUE)**
W10-1	42RND.	9.62						RAILROAD CROSSING
W012-1	24X24	4.00						DOUBLE DOWN ARROW (SYMBOL)
W012-2	48X48	16.00						LOW CLEARANCE (SYMBOL)
W012-2X	24X18	3.00						LOW CLEARANCE (PLAQUE)
W012-2a	84X24	14.00						OVERHEAD LOW CLEARANCE (FEET AND INCHES)
W012-4	120X60	50.00						LOW CLEARANCE XX FT XX IN XX MILES AHEAD
W012-5	120X60	50.00						WIDTH RESTRICTION XX FT XX IN XX MILES AHEAD
W013-1	30X30	6.25						ADVISORY SPEED (PLAQUE)
W016-2	30X24	5.00						XXX FEET (PLAQUE)
W016-3	30X24	5.00						X MILE (PLAQUE)
W020-1	**48X48**	**16.00**	**20**	**320.00**				**ROAD/BRIDGE/RAMP WORK AHEAD**
W020-2	48X48	16.00						DETOUR AHEAD
W020-3	48X48	16.00						ROAD CLOSED AHEAD
W020-4	48X48	16.00						ONE LANE ROAD AHEAD
W020-5	**48X48**	**16.00**	**12**	**192.00**				**RIGHT/CENTER/LEFT LANE CLOSED AHEAD**
W020-5a	48X48	16.00						2 RIGHT/CENTER/LEFT LANES CLOSED AHEAD
W020-6a	**48X48**	**16.00**	**8**	**128.00**				**RIGHT/CENTER/LEFT LANE CLOSED**
W020-7a	48X48	16.00						FLAGGER (SYMBOL) WITH FLAGS
W021-2	36X36	9.00						FRESH OIL
W021-5	48X48	16.00						SHOULDER WORK AHEAD
W022-1	48X48	16.00						BLASTING ZONE AHEAD
W022-2	42X36	10.50						TURN OFF 2-WAY RADIO AND PHONE
W022-3	42X36	10.50						END BLASTING ZONE
G022-1	**21X15**	**2.19**	**2**	**4.38**				**WET PAINT (ARROW PIVOTS)**

SIGN	SIZE IN.	AREA SQ.FT.	QTY EACH	TOTAL SQ.FT.	QTY RELOC EACH	TOTAL RELOC SQ.FT.	SIGN NUM.	DESCRIPTION
GUIDE SIGNS								
E05-1	**36X48**	**12.00**	**2**	**24.00**				**GORE EXIT**
E05-2	48X36	12.00						EXIT OPEN
E05-2a	48X36	12.00						EXIT CLOSED
G020-1	**60X24**	**10.00**	**4**	**40.00**				**ROAD WORK NEXT 15 MILES**
G020-2	**48X24**	**8.00**	**12**	**96.00**				**END ROAD WORK**
G020-4	36X18	4.50						PILOT CAR FOLLOW ME
G020-4a	42X30	8.75						PILOT CAR IN USE WAIT & FOLLOW
G020-4a	18X12	1.50						PILOT CAR IN USE WAIT & FOLLOW
G020-5aP	**36X24**	**6.00**	**20**	**120.00**				**WORK ZONE (PLAQUE)**
M04-8a	24X18	3.00						END DETOUR
M04-9L	48X36	12.00						DETOUR (LEFT ARROW)
M04-9R	48X36	12.00						DETOUR (RIGHT ARROW)
M04-9P	48X12	4.00						STREET NAME (PLAQUE)
M04-10L	48X18	6.00						DETOUR (ARROW LEFT)
M04-10R	48X18	6.00						DETOUR (ARROW RIGHT)
REGULATORY SIGNS								
R1-1	48X48	13.25						STOP
R1-2	**48TRI.**	**6.93**	**2**	**13.86**				**YIELD**
R1-2a	36X36	9.00						TO ONCOMING TRAFFIC (PLAQUE)
R1-3P	30X12	2.50						ALL WAY (PLAQUE)
R2-1	**36X48**	**12.00**	**34**	**408.00**				**SPEED LIMIT 60,70**
R3-1	48X48	16.00						NO RIGHT TURN (SYMBOL)
R3-2	48X48	16.00						NO LEFT TURN (SYMBOL)
R3-3	36X36	9.00						NO TURNS
R3-4	48X48	16.00						NO U-TURN (SYMBOL)
R3-7L	30X30	6.25						LEFT LANE MUST TURN LEFT
R3-7R	30X30	6.25						RIGHT LANE MUST TURN RIGHT
R4-1	**36X48**	**12.00**	**8**	**96.00**				**DO NOT PASS**
R4-2	**36X48**	**12.00**	**8**	**96.00**				**PASS WITH CARE**
R4-8a	36X48	12.00						KEEP LEFT (HORIZONTAL ARROW)
R4-7a	36X48	12.00						KEEP RIGHT (HORIZONTAL ARROW)
R5-1	30X30	6.25						DO NOT ENTER
R5-1a	36X24	6.00						WRONG WAY
R6-1L	54X18	6.75						ONE WAY ARROW (LEFT)
R6-1R	54X18	6.75						ONE WAY ARROW (RIGHT)
R6-2L	24X30	5.00						ONE WAY (LEFT)
R6-2R	24X30	5.00						ONE WAY (RIGHT)
R9-9	24X12	2.00						SIDEWALK CLOSED
R9-11L	24X18	3.00						SIDEWALK CLOSED AHEAD, (ARROW LEFT) CROSS HERE
R9-11R	24X18	3.00						SIDEWALK CLOSED AHEAD, (ARROW RIGHT) CROSS HERE
R10-6	24X36	6.00						STOP HERE ON RED (45° ARROW)
R11-2	48X30	10.00						ROAD CLOSED
R11-3a	60X30	12.50						ROAD CLOSED XX MILES AHEAD LOCAL TRAFFIC ONLY
R11-4	60X30	12.50						ROAD CLOSED TO THRU TRAFFIC
CONST-3A	**60X48**	**20.00**	**8**	**160.00**				**FINE SIGN**
CONST-3X	**56X12**	**4.67**	**8**	**37.36**				**SPEEDING/PASSING (PLATE)**
MISCELLANEOUS SIGNS								
CONST-5	48X36	12.00						POINT OF PRESENCE
CONST-5	96X48	32.00						POINT OF PRESENCE
CONST-7	48X24	8.00						RATE OUR WORK ZONE
CONST-7	**72X36**	**18.00**	**2**	**36.00**				**RATE OUR WORK ZONE**
CONST-8	**48X36**	**12.00**	**4**	**48.00**				**WORK ZONE NO PHONE ZONE**

616-10.05 CONSTRUCTION SIGNS	TOTAL	5187
616-10.10 RELOCATED SIGNS	TOTAL	0

ITEM NUMBER	TOTAL QTY	DESCRIPTION
6122008		IMPACT ATTENUATOR 40 MPH (SAND BARRELS)
6122009		IMPACT ATTENUATOR 45 MPH (SAND BARRELS)
6122010		IMPACT ATTENUATOR 50 MPH (SAND BARRELS)
6122012		IMPACT ATTENUATOR 55 MPH (SAND BARRELS)
6122014	**2**	**IMPACT ATTENUATOR 60 MPH (SAND BARRELS)**
6122017		IMPACT ATTENUATOR 65 MPH (SAND BARRELS)
6122019		IMPACT ATTENUATOR 70 MPH (SAND BARRELS)
6122020	**8**	**REPLACEMENT SAND BARREL**
6122030	**2**	**IMPACT ATTENUATOR (RELOCATION)**
6123000A	**2**	**TRUCK OR TRAILER MOUNTED ATTENUATOR (TMA)**
6161007		SPEED LIMIT AND STROBE LIGHT ASSEMBLY
6161008	**42**	**ADVANCED WARNING RAIL SYSTEM**
6161009	**16**	**FLAG ASSEMBLY**
6161012		BUOYS (BOATS KEEP OUT)
6161013		BUOYS (NO WAKE)
6161014		SPECIAL SIGN ASSEMBLY (BOATS KEEP OUT)
6161024		CHANNELIZER (TRIM LINE) WITH LIGHT
6161025	**794**	**CHANNELIZER (TRIM LINE)**
6161030		TYPE III MOVEABLE BARRICADE
6161031		TYPE III MOVEABLE BARRICADE WITH LIGHTS
6161033	**204**	**DIRECTION INDICATOR BARRICADE**
6161034		DIRECTION INDICATOR BARRICADE, WITH LIGHT
6161040	**11**	**FLASHING ARROW PANEL**
6161047		TYPE III OBJECT MARKER
6161052		WARNING LIGHT, TYPE B
6161055	**46**	**SEQUENTIAL FLASHING WARNING LIGHT**
6161070		TUBULAR MARKER
6161095		RADAR SPEED ADVISORY SYSTEM
6161096		CHANGEABLE MESSAGE SIGN, COMMISSION FURNISHED/RETAINED
6161098A	**2**	**CHANGEABLE MESSAGE SIGN W/O COMM. INTERFACE, CONTRACTOR FURNISHED/RETAINED**
6161099		CHANGEABLE MESSAGE SIGN WITH COMM. INTERFACE, CONTRACTOR FURNISHED/RETAINED
6162000A		WORK ZONE TRAFFIC SIGNAL SYSTEM
6162002		TEMPORARY LONG-TERM RUMBLE STRIPS
6162004	**16**	**TEMPORARY SHORT-TERM RUMBLE STRIPS**
6173600D	**1222**	**TEMPORARY TRAFFIC BARRIER CONTRACTOR FURNISHED/RETAINED**
6173602B		TEMPORARY TRAFFIC BARRIER CONTRACTOR FURNISHED/COMMISSION RETAINED
6174000A		TEMP. TRAFFIC BARRIER HEIGHT TRANSITION
6175010A	**1222**	**RELOCATING TEMPORARY TRAFFIC BARRIER**
6176000B		TEMPORARY TRAFFIC BARRIER COMMISSION FURNISHED/RETAINED
6177000B		TEMP. TRAFFIC BARRIER HEIGHT TRANSITION COMMISSION FURNISHED/RETAINED
6208064A		TEMPORARY RAISED PAVEMENT MARKER
9029400		TEMPORARY TRAFFIC SIGNALS
9029401		TEMPORARY TRAFFIC SIGNALS AND LIGHTING

STATE OF MISSOURI
TIMOTHY CHRISTOPHER PICKETT
NUMBER PE-2017000351
PROFESSIONAL ENGINEER

THIS SHEET HAS BEEN SIGNED, SEALED AND DATED ELECTRONICALLY.

DATE PREPARED 7/20/2020

ROUTE	STATE
I-55	MO
DISTRICT	SHEET NO.
SE	3

COUNTY SCOTT

JOB NO. J9I3545

CONTRACT ID.

PROJECT NO.

BRIDGE NO.

DESCRIPTION	DATE

IF A SEAL IS PRESENT ON THIS SHEET IT HAS BEEN ELECTRONICALLY SEALED AND DATED.

MISSOURI HIGHWAYS AND TRANSPORTATION COMMISSION

105 WEST CAPITOL
JEFFERSON CITY, MO 65102
1-888-ASK-MODOT (1-888-275-6636)

SUMMARY OF QUANTITIES
SHEET 6 OF 6

BEGIN AND END LOCATIONS

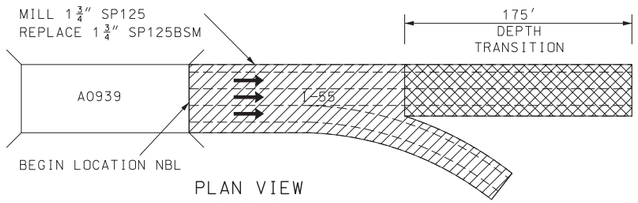

PLAN VIEW
I-55 NBL
LOG MILE 66.203

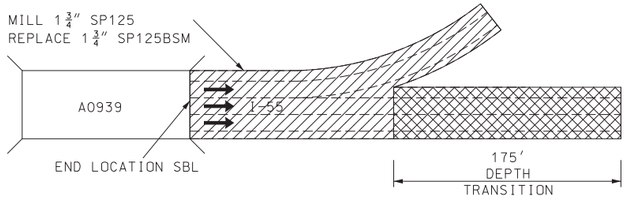

PLAN VIEW
I-55 SBL
LOG MILE 143.650

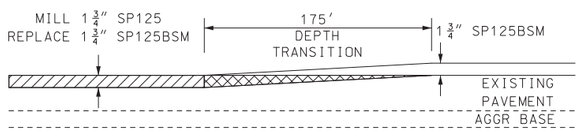

TYPICAL
I-55 NBL
LOG MILE 66.203

I-55 SBL
LOG MILE 143.650

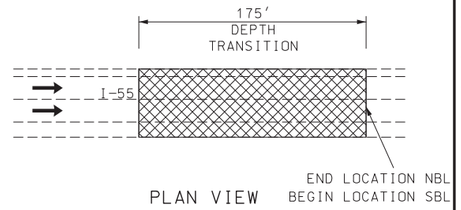

PLAN VIEW
I-55 NBL
LOG MILE 80.956

I-55 SBL
LOG MILE 129.052

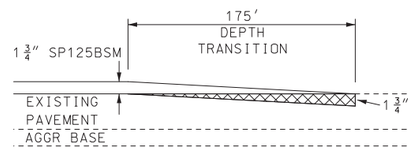

TYPICAL
I-55 NBL
LOG MILE 80.956

I-55 SBL
LOG MILE 129.052

DEPTH TRANSITION AT BRIDGE

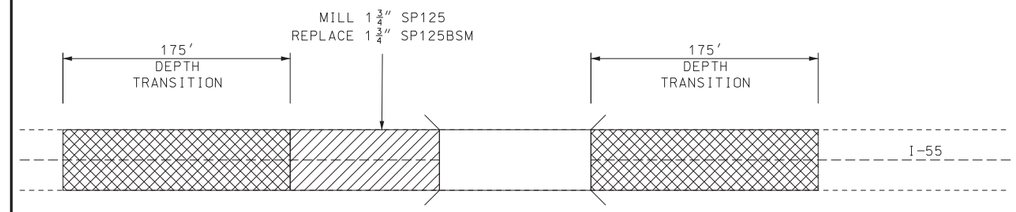

PLAN VIEW AT BRIDGE
I-55

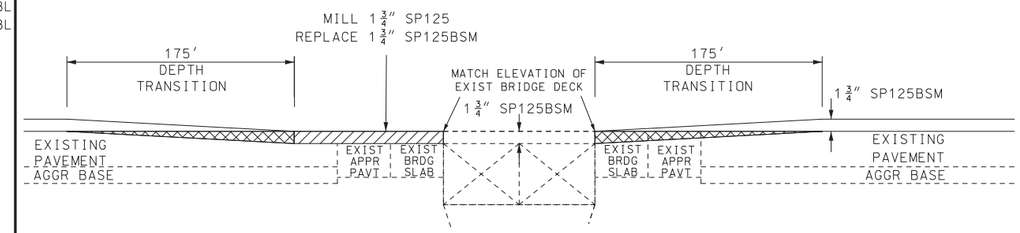

TYPICAL AT BRIDGE
I-55

BRIDGE LOCATIONS			
BRIDGE NUMBER	CENTER BRIDGE NBL LOG MILE	CENTER BRIDGE SBL LOG MILE	REMARKS
A0938	67.474	142.329	US 62, UP RR
DEPTH TRANSTION LENGTHS SHALL BE NO LESS THAN LISTED			

DEPTH TRANSITION AT OVERPASS

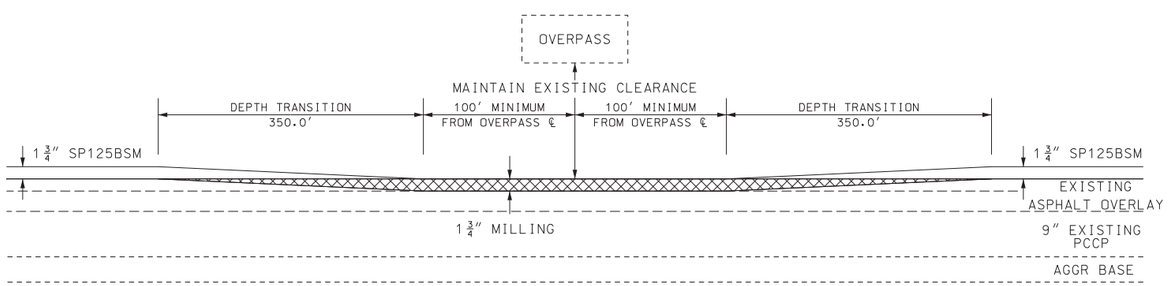

OVERPASS LOCATIONS			
BRIDGE NUMBER	NBL CENTER BRIDGE LOG MILE	SBL CENTER BRIDGE LOG MILE	REMARKS
R0118	77.618	132.225	ROUTE C

COLDMILLING

MILL AND REPLACE

LOG MILE LOCATIONS APPROXIMATE ADJUST AS DIRECTED BY ENGINEER TO FIT FIELD CONDITIONS.

DRAWING NOT TO SCALE

DEPTH TRANSITION AT BRIDGE

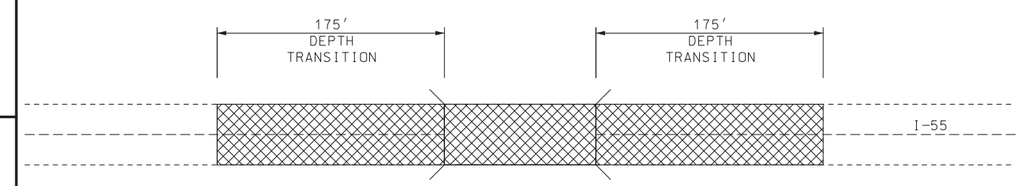

PLAN VIEW AT BRIDGE
I-55

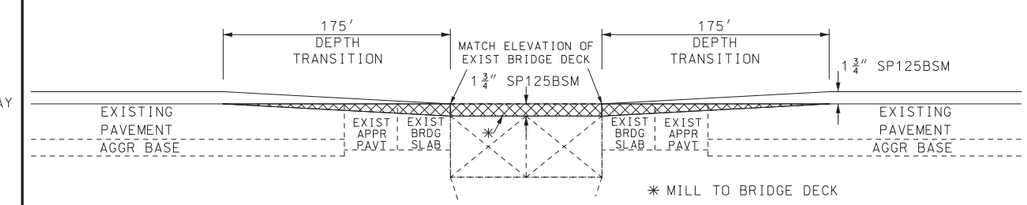

TYPICAL AT BRIDGE
I-55

BRIDGE LOCATIONS			
BRIDGE NUMBER	CENTER BRIDGE NBL LOG MILE	CENTER BRIDGE SBL LOG MILE	REMARKS
A0913	75.416	134.356	RTE U, ABANDONED RR
DEPTH TRANSTION LENGTHS SHALL BE NO LESS THAN LISTED			

STATE OF MISSOURI
TIMOTHY CHRISTOPHER PICKETT
NUMBER PE-2017000351
PROFESSIONAL ENGINEER

THIS SHEET HAS BEEN SIGNED, SEALED AND DATED ELECTRONICALLY.

DATE PREPARED
5/28/2020

ROUTE	STATE
I-55	MO
DISTRICT	SHEET NO.
SE	4

COUNTY
SCOTT

JOB NO.
J9I3545

CONTRACT ID.

PROJECT NO.

BRIDGE NO.

DATE	DESCRIPTION

IF A SEAL IS PRESENT ON THIS SHEET IT HAS BEEN ELECTRONICALLY SEALED AND DATED.

MISSOURI HIGHWAYS AND TRANSPORTATION COMMISSION
105 WEST CAPITOL
JEFFERSON CITY, MO 65102
1-888-ASK-MODOT (1-888-275-6636)

SPECIAL SHEET
SHEET 1 OF 5

REV.

PLAN VIEW FOR OFF RAMP WITHOUT DECEL LANE

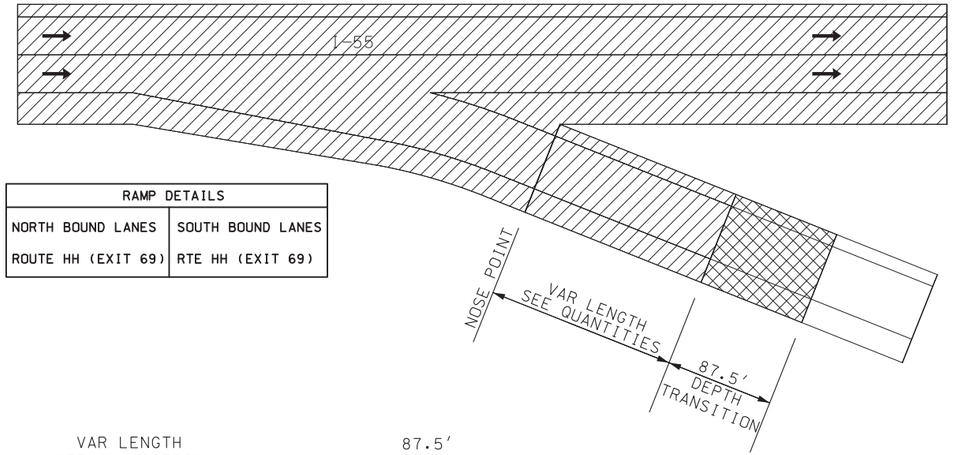

RAMP DETAILS	
NORTH BOUND LANES	SOUTH BOUND LANES
ROUTE HH (EXIT 69)	RTE HH (EXIT 69)

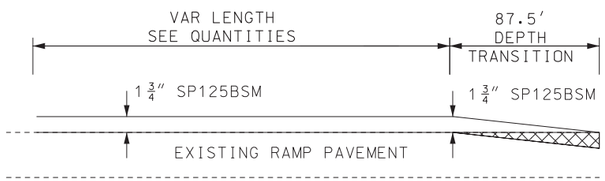

TYPICAL
OFF-RAMP
RTE HH

PLAN VIEW FOR OFF RAMP WITH DECEL LANE

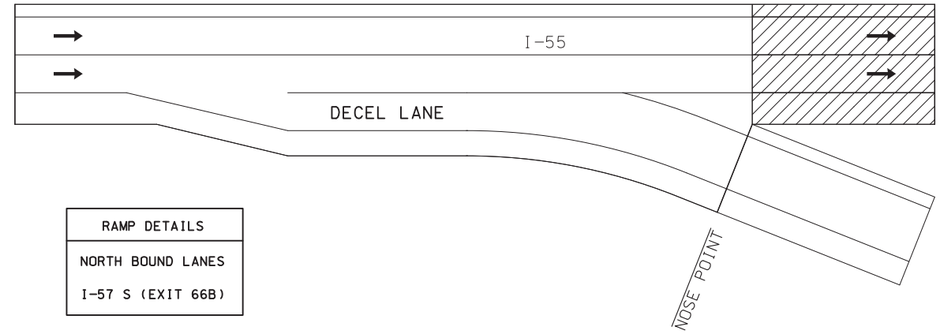

RAMP DETAILS
NORTH BOUND LANES
I-57 S (EXIT 66B)

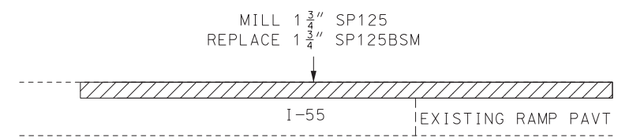

TYPICAL
OFF-RAMP
I-57 S

PLAN VIEW FOR OFF RAMP WITHOUT DECEL LANE

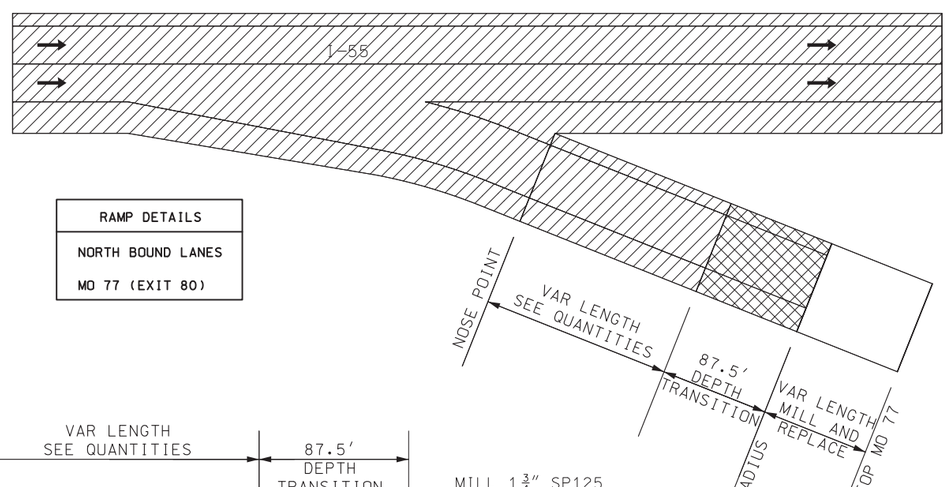

RAMP DETAILS
NORTH BOUND LANES
MO 77 (EXIT 80)

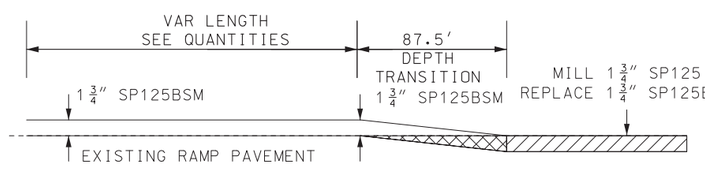

TYPICAL
OFF-RAMP
MO 77

PLAN VIEW FOR OFF RAMP WITHOUT DECEL LANE

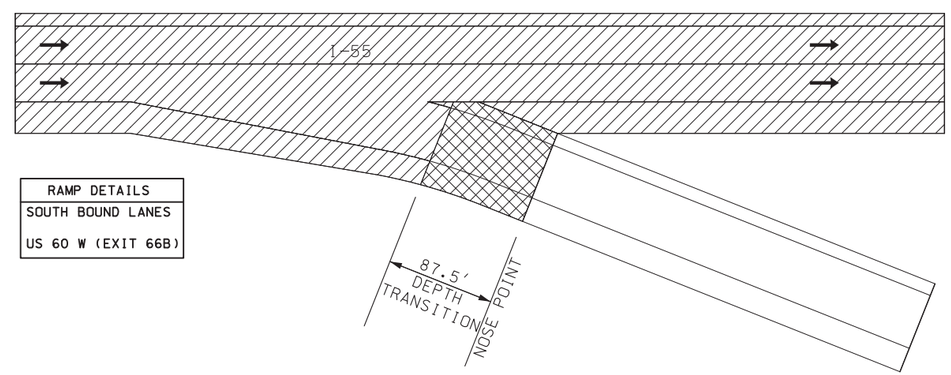

RAMP DETAILS
SOUTH BOUND LANES
US 60 W (EXIT 66B)

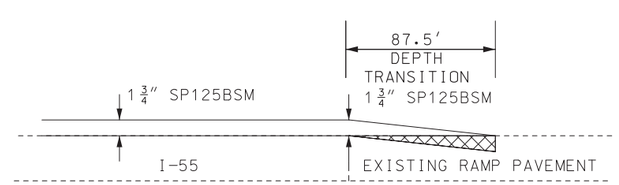

TYPICAL
OFF-RAMP
US 60 W

COLDMILLING

OVERLAY

MILL AND REPLACE

DRAWING NOT TO SCALE

STATE OF MISSOURI
TIMOTHY CHRISTOPHER PICKETT NUMBER PE-2017000351
PROFESSIONAL ENGINEER

THIS SHEET HAS BEEN SIGNED, SEALED AND DATED ELECTRONICALLY.

DATE PREPARED	
5/28/2020	
ROUTE	STATE
I-55	MO
DISTRICT	SHEET NO.
SE	5
COUNTY	
SCOTT	
JOB NO.	
J9I3545	
CONTRACT ID.	
PROJECT NO.	
BRIDGE NO.	

DATE	DESCRIPTION

MISSOURI HIGHWAYS AND TRANSPORTATION COMMISSION

105 WEST CAPITOL
JEFFERSON CITY, MO 65102
1-888-ASK-MODOT (1-888-275-6636)

SPECIAL SHEET
SHEET 2 OF 5

IF A SEAL IS PRESENT ON THIS SHEET IT HAS BEEN ELECTRONICALLY SEALED AND DATED.

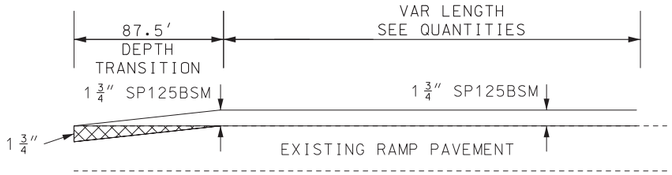

TYPICAL
ON-RAMP
RTE HH

PLAN VIEW FOR ON RAMP

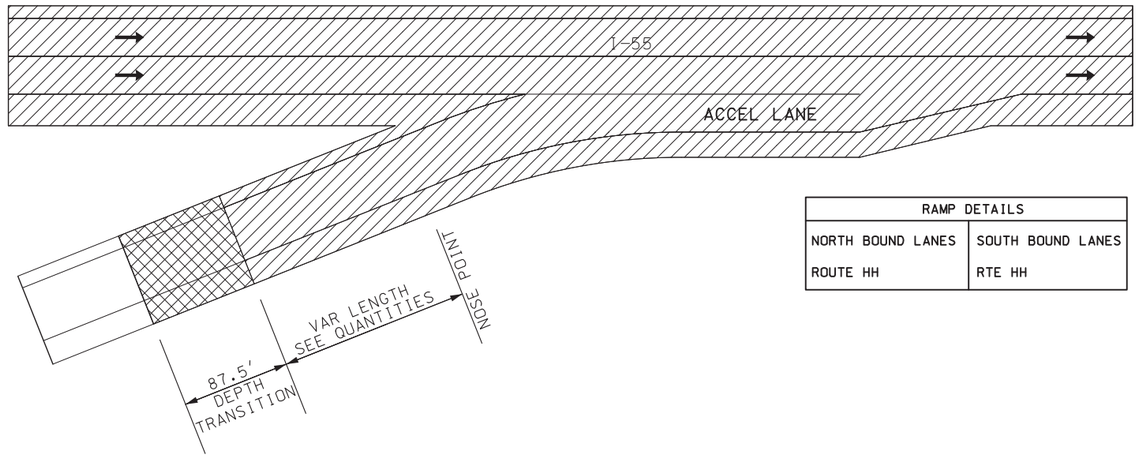

RAMP DETAILS	
NORTH BOUND LANES	SOUTH BOUND LANES
ROUTE HH	RTE HH

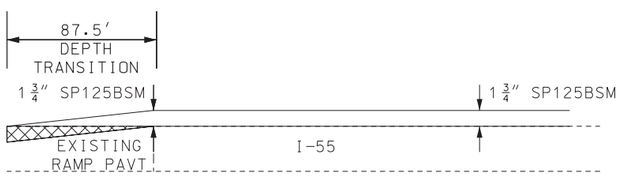

TYPICAL
ON-RAMP
I-57 S

PLAN VIEW FOR ON RAMP

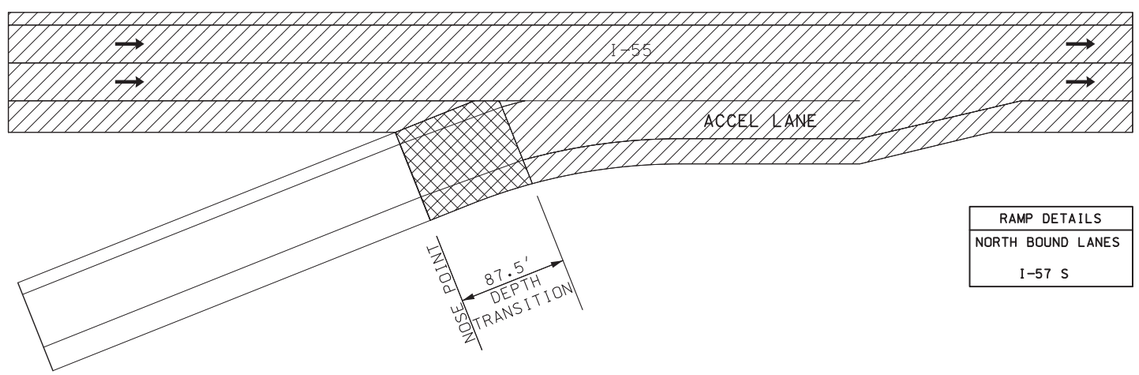

RAMP DETAILS
NORTH BOUND LANES
I-57 S

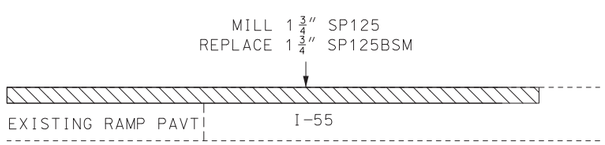

TYPICAL
ON-RAMP
I-57 S

PLAN VIEW FOR ON RAMP

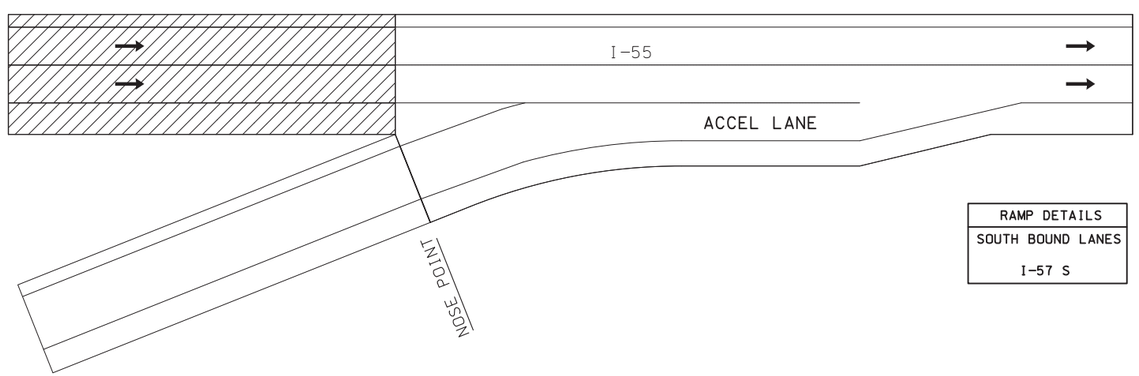

RAMP DETAILS
SOUTH BOUND LANES
I-57 S

COLDMILLING

OVERLAY

MILL AND REPLACE

DRAWING NOT TO SCALE

STATE OF MISSOURI
TIMOTHY CHRISTOPHER PICKETT
NUMBER PE-2017000351
PROFESSIONAL ENGINEER

THIS SHEET HAS BEEN SIGNED, SEALED AND DATED ELECTRONICALLY.

DATE PREPARED	
5/28/2020	
ROUTE: I-55	STATE: MO
DISTRICT: SE	SHEET NO.: 6
COUNTY: SCOTT	
JOB NO.: J9I3545	
CONTRACT ID.	
PROJECT NO.	
BRIDGE NO.	

DATE	DESCRIPTION

IF A SEAL IS PRESENT ON THIS SHEET IT HAS BEEN ELECTRONICALLY SEALED AND DATED.

MISSOURI HIGHWAYS AND TRANSPORTATION COMMISSION

105 WEST CAPITOL
JEFFERSON CITY, MO 65102
1-888-ASK-MODOT (1-888-275-6636)

SPECIAL SHEET
SHEET 3 OF 5

US 62(EXIT 67) SBL
ON & OFF RAMPS

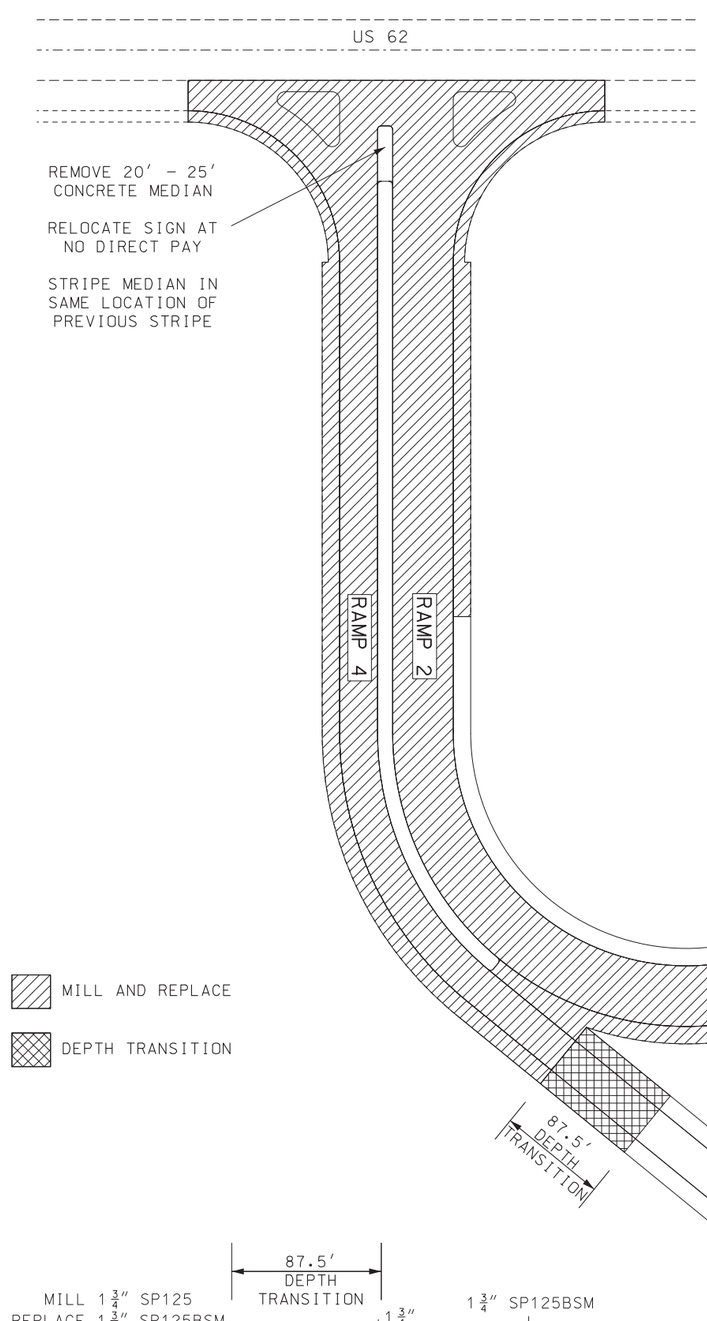

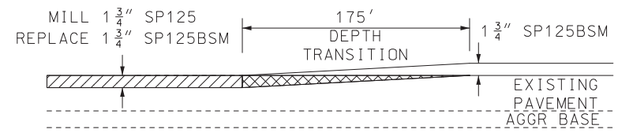

TYPICAL

I-55 NBL
LOG MILE 67.474

I-55 SBL
LOG MILE 142.329

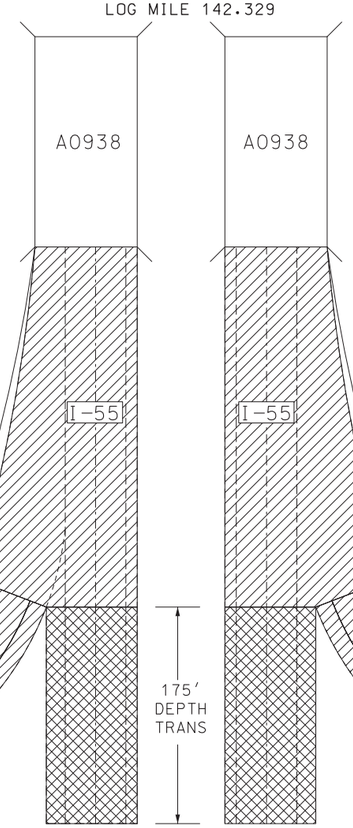

US 62(EXIT 67) NBL
ON & OFF RAMPS

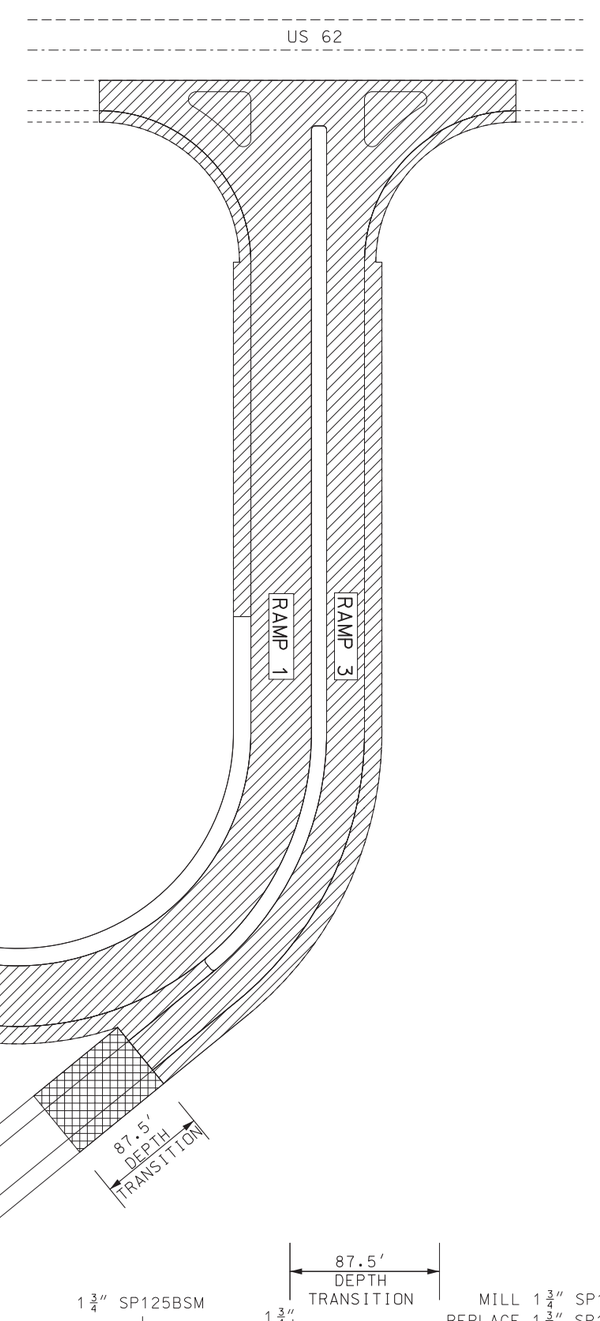

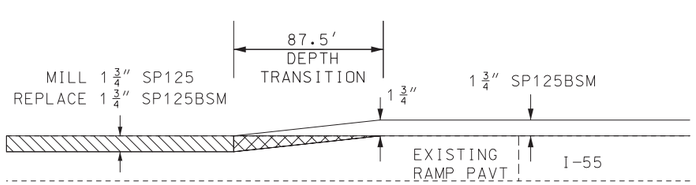

TYPICAL
US 62 SBL ON RAMP

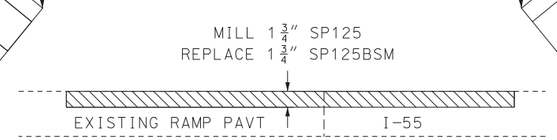

TYPICAL
US 62 NBL ON RAMP
US 62 SBL OFF RAMP

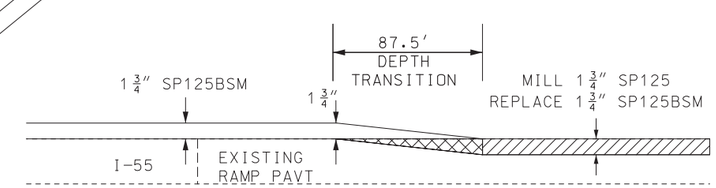

TYPICAL
US 62 NBL OFF RAMP

DRAWING NOT TO SCALE

STATE OF MISSOURI
TIMOTHY CHRISTOPHER PICKETT
NUMBER PE-2017000351
PROFESSIONAL ENGINEER

THIS SHEET HAS BEEN SIGNED, SEALED AND DATED ELECTRONICALLY.

DATE PREPARED	5/28/2020
ROUTE	I-55
STATE	MO
DISTRICT	SE
SHEET NO.	7
COUNTY	SCOTT
JOB NO.	J9I3545
CONTRACT ID.	
PROJECT NO.	
BRIDGE NO.	

DATE	DESCRIPTION

MISSOURI HIGHWAYS AND TRANSPORTATION COMMISSION
105 WEST CAPITOL
JEFFERSON CITY, MO 65102
1-888-ASK-MODOT (1-888-275-6636)

SPECIAL SHEET
SHEET 4 OF 5

IF A SEAL IS PRESENT ON THIS SHEET IT HAS BEEN ELECTRONICALLY SEALED AND DATED.

TYPE B CONCRETE BARRIER AND GUARDRAIL

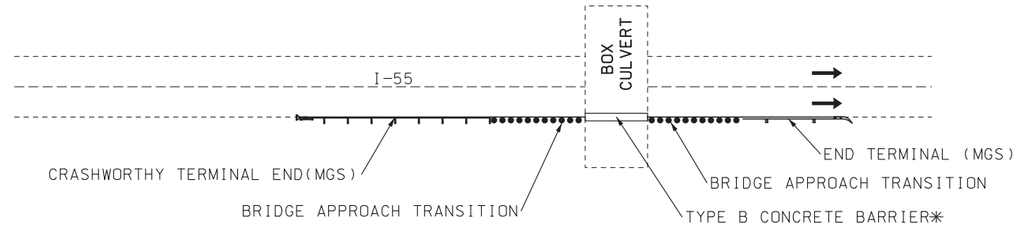

PLAN VIEW
BOX CULVERT

I-55 NBL
LOG MILE 74.566

I-55 SBL
LOG MILE 135.266
LOG MILE 138.880

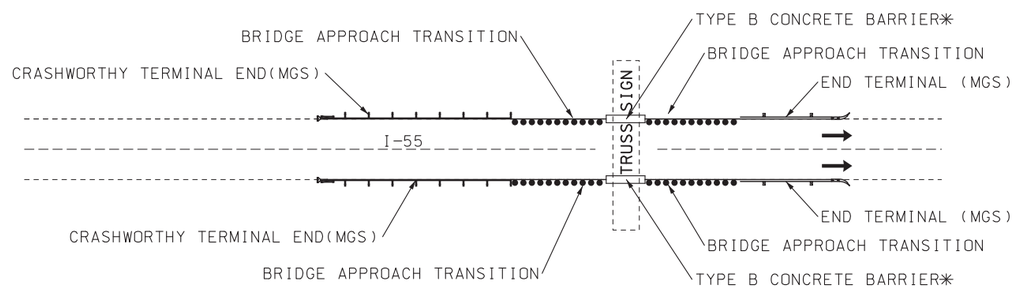

PLAN VIEW
TRUSS SIGN

I-55 SBL
LOG MILE 143.295

✳ BUILD A CONCRETE OR ASPHALT PAD TO PLACE BARRIER ON

SIZE OF PAD SHALL BE 1′ WIDER THAN THE BOTTOM OF THE BARRIER FOR THE LENGTH OF THE BARRIER

CONCRETE OR ASPHALT PAD AT NO DIRECT PAY

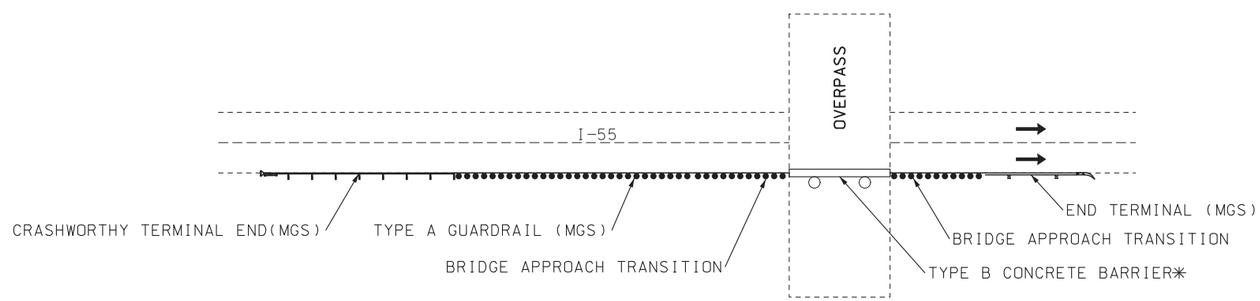

PLAN VIEW
OVERPASS

I-55 NBL
LOG MILE 77.618 (ROUTE C)

I-55 SBL
LOG MILE 132.225 (ROUTE C)

DRAWING NOT TO SCALE

STATE OF MISSOURI
TIMOTHY CHRISTOPHER PICKETT
NUMBER PE-2017000351
PROFESSIONAL ENGINEER

THIS SHEET HAS BEEN SIGNED, SEALED AND DATED ELECTRONICALLY.

DATE PREPARED	5/28/2020
ROUTE	I-55
STATE	MO
DISTRICT	SE
SHEET NO.	8
COUNTY	SCOTT
JOB NO.	J9I3545
CONTRACT ID.	
PROJECT NO.	
BRIDGE NO.	

DATE	DESCRIPTION

IF A SEAL IS PRESENT ON THIS SHEET IT HAS BEEN ELECTRONICALLY SEALED AND DATED.

MISSOURI HIGHWAYS AND TRANSPORTATION COMMISSION

105 WEST CAPITOL
JEFFERSON CITY, MO 65102
1-888-ASK-MODOT (1-888-275-6636)

SPECIAL SHEET
SHEET 5 OF 5

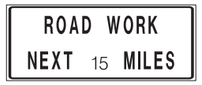

G020-1

(1A) NBL

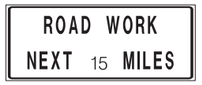

G020-1

(1B) SBL

G020-2

(26)

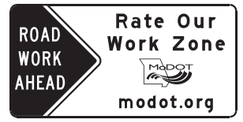

CONST-7-72

(56)

CONST-8

(59)

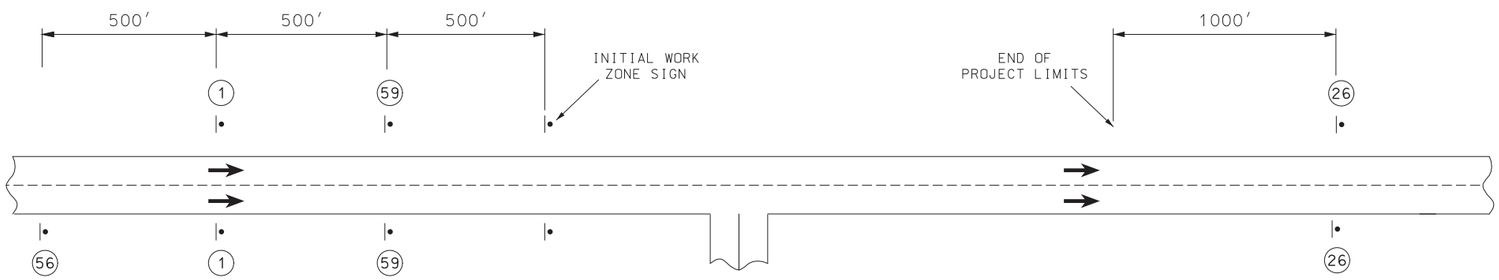

BEGIN/END PROJECT
SIGNING

NOTES:

ADDITIONAL WARNING SIGNS SHALL BE ERECTED AT OTHER INTERSECTIONS WITHIN THE WORK ZONE, AS DIRECTED BY THE ENGINEER

DISTANCE MAY BE ADJUSTED ACCORDING TO FIELD CONDITIONS

ANY EXISTING SIGNING THAT CONFLICTS WITH THE TRAFFIC CONTROL SIGNING SHALL BE COMPETELY COVERED OR REMOVED

NO PAYMENT WILL BE MADE FOR RELOCATION OF CONSTRUCTION SIGNS FOR THIS OPERATION

DRAWING NOT TO SCALE. FOLLOW DIMENSIONS.

TRAFFIC CONTROL LEGEND

• SIGN (SINGLE SIDED)

(1A) - NBL LOG MILE 66.203 TO 80.956

(1B) - SBL LOG MILE 129.052 TO 143.650

STATE OF MISSOURI
TIMOTHY CHRISTOPHER PICKETT
NUMBER PE-2017000351
PROFESSIONAL ENGINEER

THIS SHEET HAS BEEN SIGNED, SEALED AND DATED ELECTRONICALLY.

DATE PREPARED	5/28/2020
ROUTE	I-55
STATE	MO
DISTRICT	SE
SHEET NO.	9
COUNTY	SCOTT
JOB NO.	J9I3545
CONTRACT ID.	
PROJECT NO.	
BRIDGE NO.	

DATE	DESCRIPTION

MISSOURI HIGHWAYS AND TRANSPORTATION COMMISSION

105 WEST CAPITOL
JEFFERSON CITY, MO 65102
1-888-ASK-MODOT (1-888-275-6636)

TRAFFIC CONTROL
SHEET 1 OF 7

IF A SEAL IS PRESENT ON THIS SHEET IT HAS BEEN ELECTRONICALLY SEALED AND DATED.

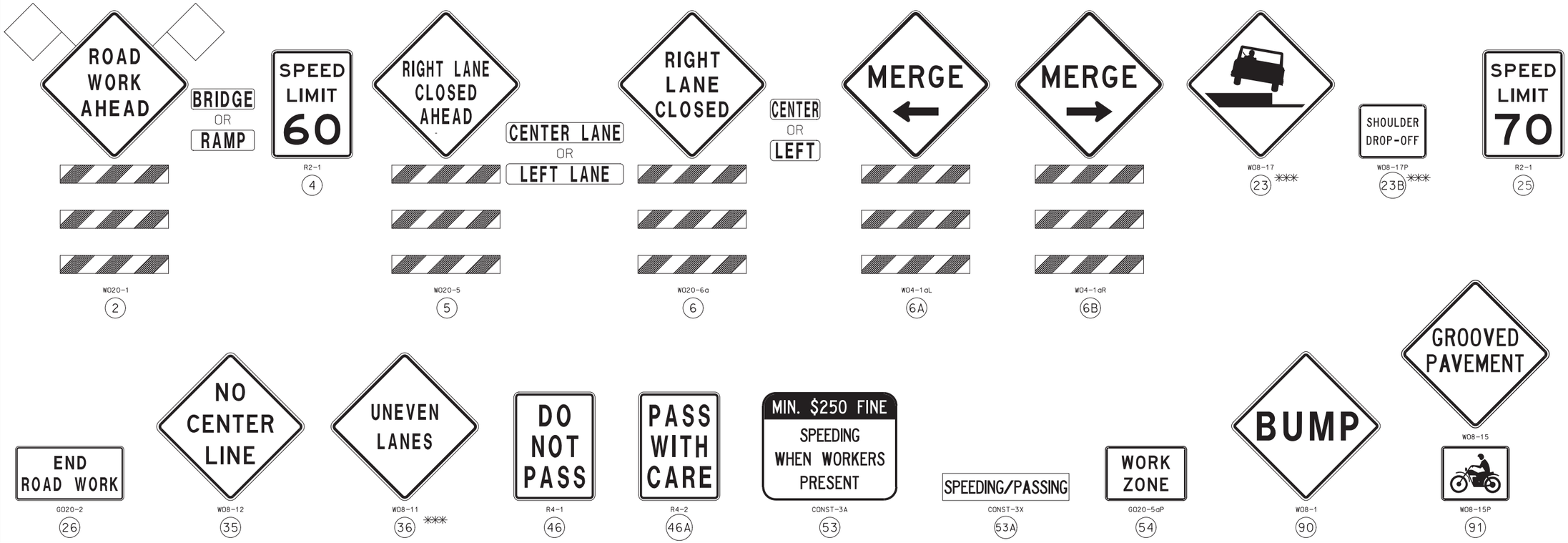

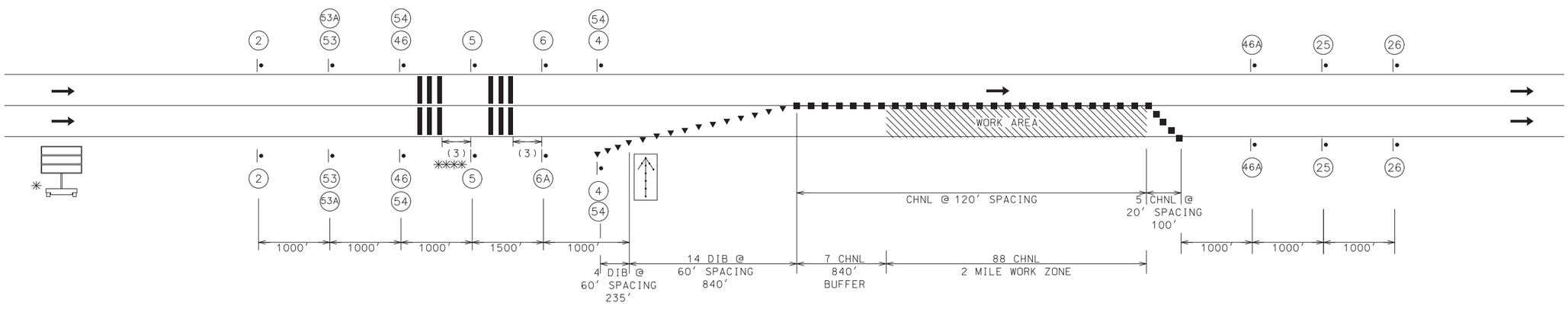

NOTE:

* MESSAGE AND LOCATION TO BE DETERMINED BY ENGINEER

** SIGN QUANTITIES INCLUDE ADEQUATE TRAFFIC CONTROL ITEMS FOR FOUR SET-UPS FOR THE TWO-LANE ONE WAY TRAFFIC OPERATION

*** SIGNS SHALL BE SPACED AT 1 MILE INTERVALS

NO PAYMENT WILL BE MADE FOR RELOCATION OF CONSTRUCTION SIGNS FOR THIS OPERATION

ANY ADDITIONAL SETUPS SHALL BE AT THE CONTRACTORS EXPENSE.

DRAWING NOT TO SCALE. FOLLOW DIMENSIONS.

TYPICAL LANE ** CLOSURE RTE I-55

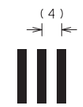

SHORT-TERM RUMBLE STRIPS SPACING EXAMPLE

SHORT-TERM RUMBLE STRIPS		
SPEED MPH	DISTANCE (3)	SPACING (4)
0-45 (OPTIONAL)	120 FT	10 FT
50-55	160 FT	15 FT
60-70	200 FT	20 FT

**** SECOND SET OF TEMPORARY RUMBLES OPTIONAL

TRAFFIC CONTROL LEGEND

- SIGN (SINGLE SIDED)
- CHANNELIZER
- DIRECTIONAL INDICATOR BARRICADE (DIB)
- FLASHING ARROW PANEL
- CHANGEABLE MESSAGE BOARD
- SHORT-TERM RUMBLE STRIPS

STATE OF MISSOURI
TIMOTHY CHRISTOPHER PICKETT
NUMBER PE-2017000351
PROFESSIONAL ENGINEER

THIS SHEET HAS BEEN SIGNED, SEALED AND DATED ELECTRONICALLY.

DATE PREPARED 5/28/2020

ROUTE	STATE
I-55	MO
DISTRICT	SHEET NO.
SE	10

COUNTY SCOTT

JOB NO. J9I3545

CONTRACT ID.

PROJECT NO.

BRIDGE NO.

DATE	DESCRIPTION

IF A SEAL IS PRESENT ON THIS SHEET IT HAS BEEN ELECTRONICALLY SEALED AND DATED.

MISSOURI HIGHWAYS AND TRANSPORTATION COMMISSION

105 WEST CAPITOL
JEFFERSON CITY, MO 65102
1-888-ASK-MODOT (1-888-275-6636)

TRAFFIC CONTROL
SHEET 2 OF 7

REV.

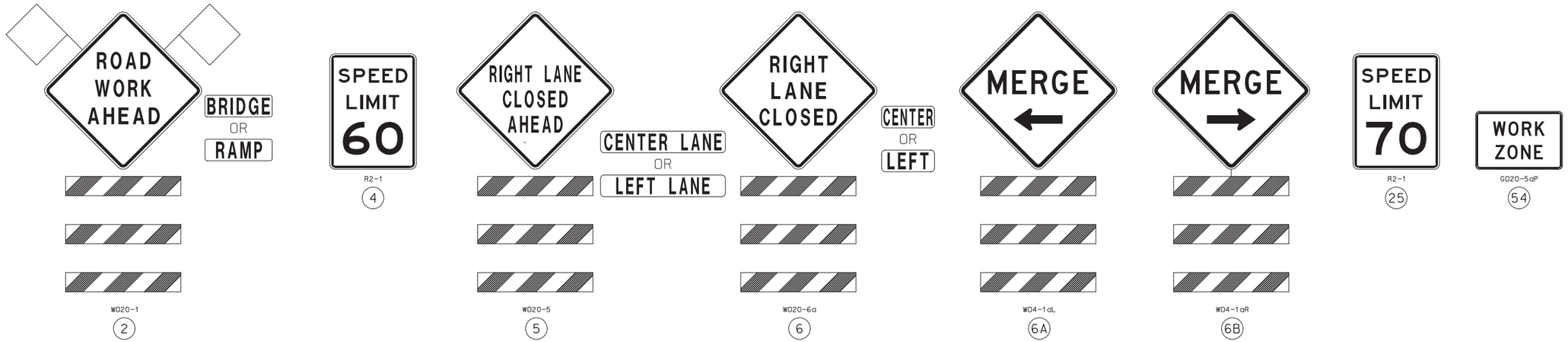

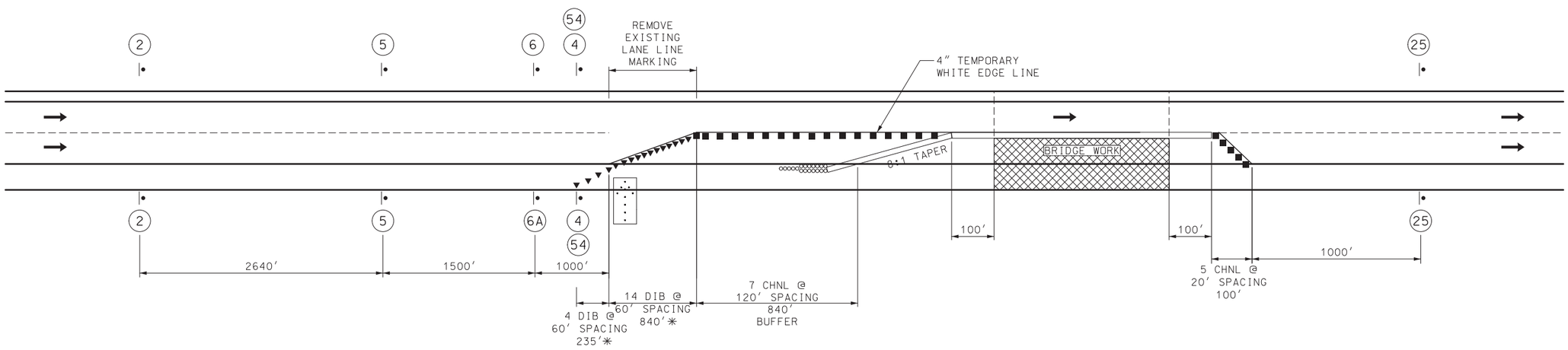

LONG TERM LANE CLOSURE
FOR BRIDGE WORK ON I-55

NOTE:

✳ SEQUENTIAL FLASHING WARNING LIGHTS SHALL BE PLACED ON ALL TRAFFIC CONTROL DEVICES IN THE TAPER LENGTH.

SIGN QUANTITIES INCLUDE ADEQUATE TRAFFIC CONTROL ITEMS FOR TWO SET-UPS FOR THE LONG TERM LANE CLOSURE FOR BRIDGE WORK TRAFFIC OPERATION.

ANY ADDITIONAL SETUPS SHALL BE AT THE CONTRACTORS EXPENSE

DRAWING NOT TO SCALE. FOLLOW DIMENSIONS.

TRAFFIC CONTROL LEGEND

- SIGN (SINGLE SIDED)
- DIRECTION INDICATOR BARRICADE
- CHANNELIZER
- TEMPORARY TRAFFIC BARRIER
- FLASHING ARROW PANEL
- IMPACT ATTENUATOR

STATE OF MISSOURI
TIMOTHY CHRISTOPHER PICKETT
NUMBER PE-2017000351
PROFESSIONAL ENGINEER

THIS SHEET HAS BEEN SIGNED, SEALED AND DATED ELECTRONICALLY.

DATE PREPARED	5/28/2020
ROUTE	I-55
STATE	MO
DISTRICT	SE
SHEET NO.	11
COUNTY	SCOTT
JOB NO.	J9I3545
CONTRACT ID.	
PROJECT NO.	
BRIDGE NO.	

DATE	DESCRIPTION

IF A SEAL IS PRESENT ON THIS SHEET IT HAS BEEN ELECTRONICALLY SEALED AND DATED.

MISSOURI HIGHWAYS AND TRANSPORTATION COMMISSION

105 WEST CAPITOL
JEFFERSON CITY, MO 65102
1-888-ASK-MODOT (1-888-275-6636)

TRAFFIC CONTROL
SHEET 3 OF 7

R2-1

(25)

W05-1

(43)

E05-1

(49)

TRAFFIC CONTROL LEGEND

- SIGN (SINGLE SIDED)
- CHANNELIZER
- DIRECTIONAL INDICATOR BARRICADE (DIB)
- FLASHING ARROW PANEL

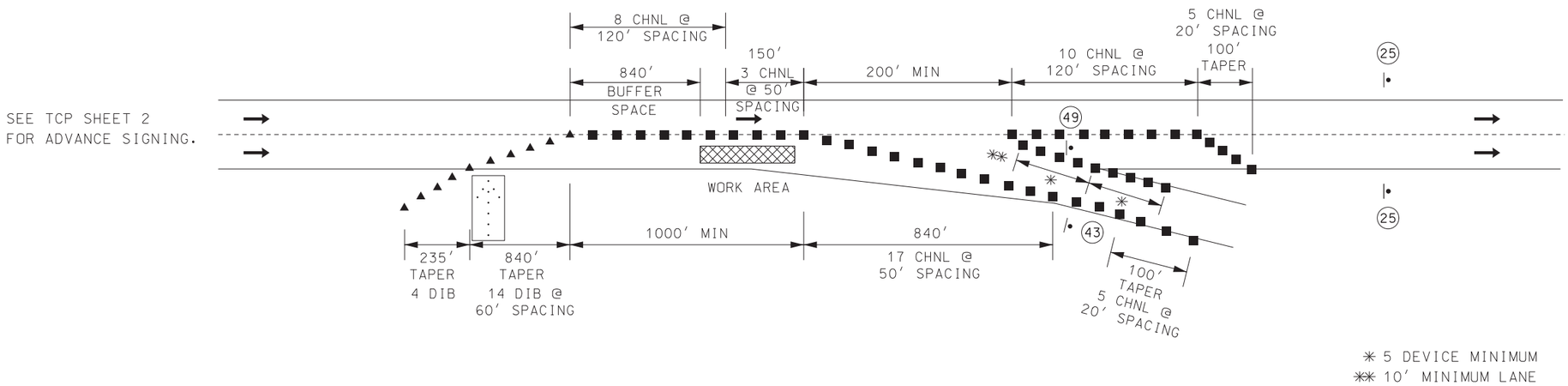

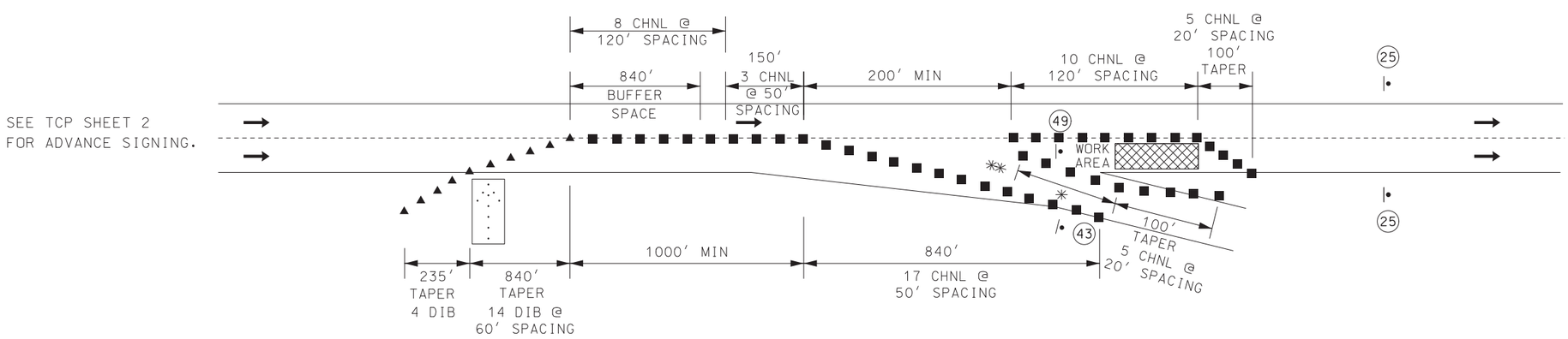

NOTE:

NO PAYMENT WILL BE MADE FOR RELOCATION OF CONSTRUCTION SIGNS FOR THIS OPERATION

DRAWING NOT TO SCALE. FOLLOW DIMENSIONS.

EXIT RAMP DETAILS

STATE OF MISSOURI
TIMOTHY CHRISTOPHER PICKETT
NUMBER PE-2017000351
PROFESSIONAL ENGINEER

THIS SHEET HAS BEEN SIGNED, SEALED AND DATED ELECTRONICALLY.

DATE PREPARED	
5/28/2020	
ROUTE	STATE
I-55	MO
DISTRICT	SHEET NO.
SE	12
COUNTY	
SCOTT	
JOB NO.	
J9I3545	
CONTRACT ID.	
PROJECT NO.	
BRIDGE NO.	

DATE	DESCRIPTION

IF A SEAL IS PRESENT ON THIS SHEET IT HAS BEEN ELECTRONICALLY SEALED AND DATED.

MISSOURI HIGHWAYS AND TRANSPORTATION COMMISSION

105 WEST CAPITOL
JEFFERSON CITY, MO 65102
1-888-ASK-MODOT (1-888-275-6636)

TRAFFIC CONROL
SHEET 4 OF 7

REV.

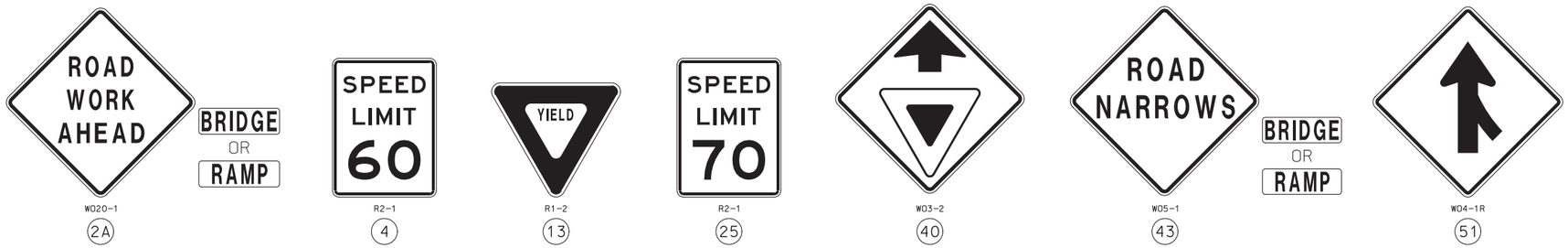

TRAFFIC CONTROL LEGEND

- SIGN (SINGLE SIDED)
- CHANNELIZER
- DIRECTIONAL INDICATOR BARRICADE (DIB)
- FLASHING ARROW PANEL

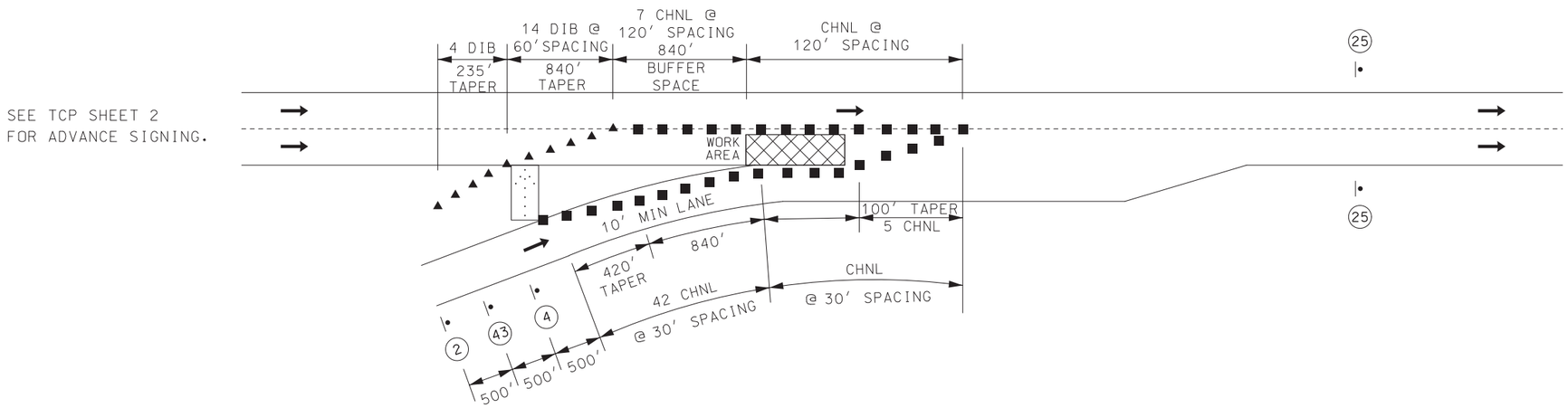

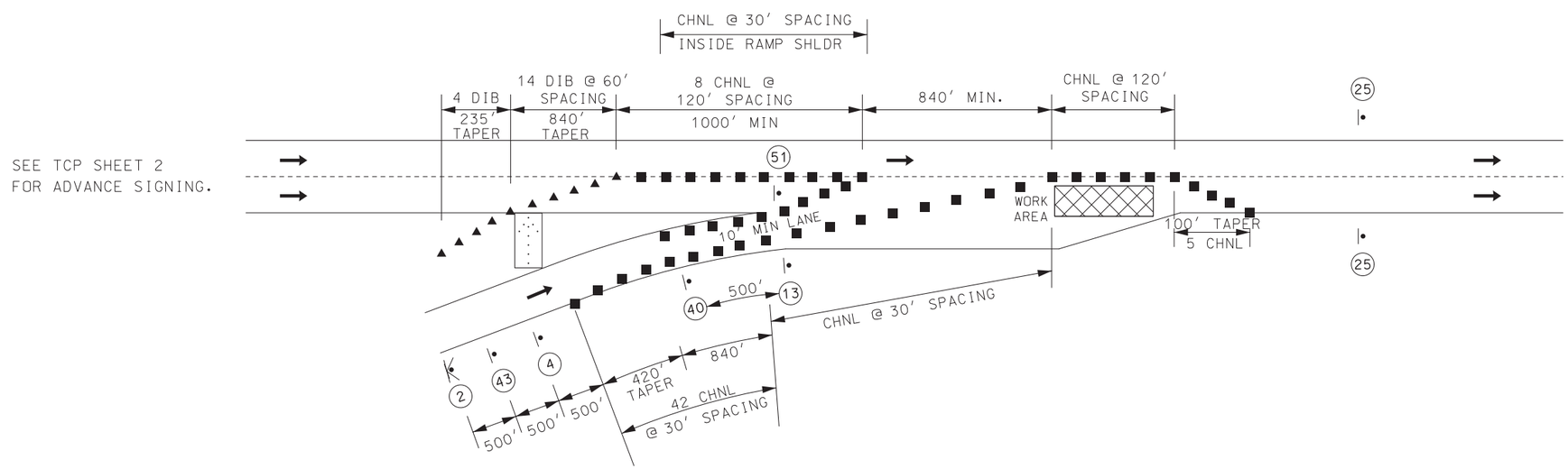

NOTE:

NO PAYMENT WILL BE MADE FOR RELOCATION OF CONSTRUCTION SIGNS FOR THIS OPERATION

DRAWING NOT TO SCALE. FOLLOW DIMENSIONS.

ENTRANCE RAMP DETAILS

STATE OF MISSOURI
TIMOTHY CHRISTOPHER PICKETT
NUMBER PE-2017000351
PROFESSIONAL ENGINEER

THIS SHEET HAS BEEN SIGNED, SEALED AND DATED ELECTRONICALLY.

DATE PREPARED	5/28/2020
ROUTE	I-55
STATE	MO
DISTRICT	SE
SHEET NO.	13
COUNTY	SCOTT
JOB NO.	J9I3545
CONTRACT ID.	
PROJECT NO.	
BRIDGE NO.	

DATE	DESCRIPTION

IF A SEAL IS PRESENT ON THIS SHEET IT HAS BEEN ELECTRONICALLY SEALED AND DATED.

MISSOURI HIGHWAYS AND TRANSPORTATION COMMISSION

105 WEST CAPITOL
JEFFERSON CITY, MO 65102
1-888-ASK-MODOT (1-888-275-6636)

TRAFFIC CONROL
SHEET 5 OF 7

REV.

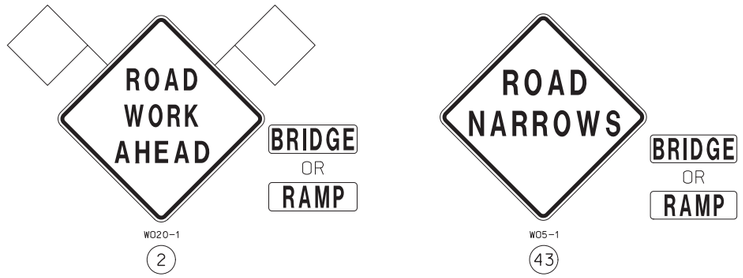

TRAFFIC CONTROL LEGEND

- SIGN (SINGLE SIDED)
- DIRECTIONAL INDICATOR BARRICADE (DIB)
- CHANNELIZER

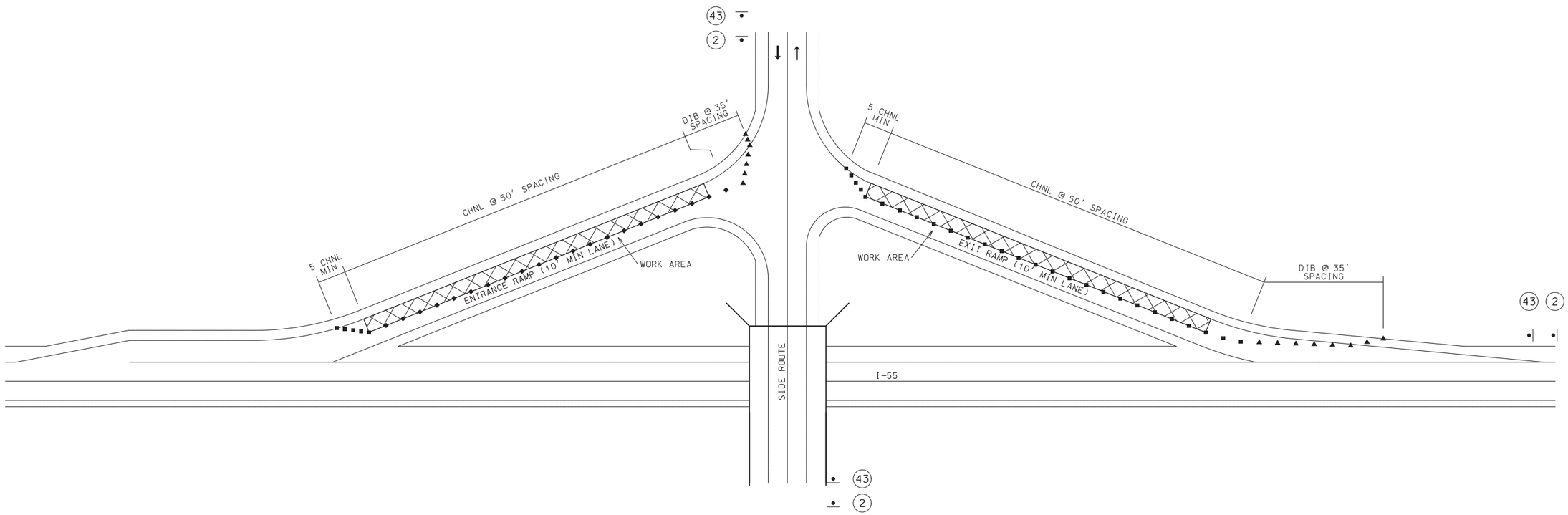

RAMP DETAILS

NOTE:

SIGNS (2) AND (43) ARE TO BE PLACED ALONG I-55 AND ALONG INTERSECTING ROUTES APPROACHING THE RAMP AS DIRECTED BY THE ENGINEER

NO PAYMENT WILL BE MADE FOR RELOCATION OF CONSTRUCTION SIGNS FOR THIS OPERATION

DRAWING NOT TO SCALE. FOLLOW DIMENSIONS.

STATE OF MISSOURI
TIMOTHY CHRISTOPHER PICKETT
NUMBER PE-2017000351
PROFESSIONAL ENGINEER

THIS SHEET HAS BEEN SIGNED, SEALED AND DATED ELECTRONICALLY.

DATE PREPARED	5/28/2020
ROUTE	I-55
STATE	MO
DISTRICT	SE
SHEET NO.	14
COUNTY	SCOTT
JOB NO.	J9I3545
CONTRACT ID.	
PROJECT NO.	
BRIDGE NO.	

DATE	DESCRIPTION

IF A SEAL IS PRESENT ON THIS SHEET IT HAS BEEN ELECTRONICALLY SEALED AND DATED.

MISSOURI HIGHWAYS AND TRANSPORTATION COMMISSION

105 WEST CAPITOL
JEFFERSON CITY, MO 65102
1-888-ASK-MODOT (1-888-275-6636)

TRAFFIC CONTROL
SHEET 6 OF 7

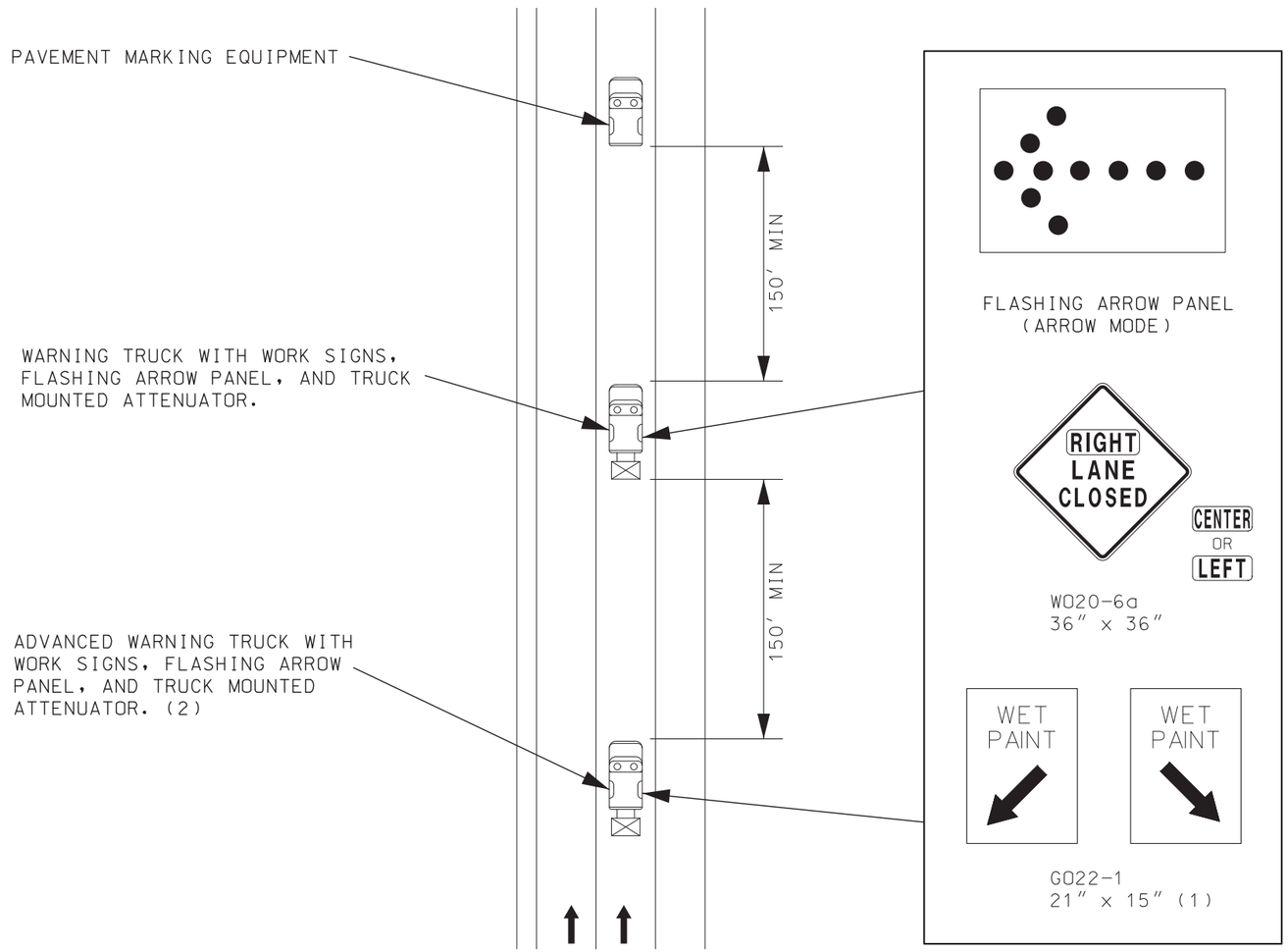

NOTES:

ALL WARNING TRUCKS SHALL BE EQUIPPED WITH WORK SIGNS, FLASHING ARROW PANEL, TRUCK MOUNTED ATTENUATOR, AND A MINIMUM OF TWO FLASHING AMBER WARNING LIGHTS.

TRUCK SPACING MAY BE ADJUSTED AT THE DISCRETION OF THE ENGINEER.

(1) WET PAINT SIGNS ARE INSTALLED TO INDICATE THE SIDE IN WHICH THE PAVEMENT MARKING MATERIAL IS BEING APPLIED. AT THE CONTRACTOR'S OPTION, A FRONT FACING WET PAINT SIGN MAY BE INSTALLED ON THE LEFT SIDE OF THE PAVEMENT MARKING EQUIPMENT.

(2) REAR WARNING TRUCK IS POSITIONED AT THE NO TRACK POINT OF THE PAVEMENT MARKING MATERIAL OR SPACING SHOWN, WHICHEVER IS GREATER.

MOVING OPERATION - OPEN TO TRAFFIC

DIVIDED HIGHWAY

STATE OF MISSOURI
TIMOTHY CHRISTOPHER PICKETT
NUMBER PE-2017000351
PROFESSIONAL ENGINEER

THIS SHEET HAS BEEN SIGNED, SEALED AND DATED ELECTRONICALLY.

DATE PREPARED	
5/28/2020	
ROUTE	STATE
I-55	MO
DISTRICT	SHEET NO.
SE	15
COUNTY	
SCOTT	
JOB NO.	
J9I3545	
CONTRACT ID.	
PROJECT NO.	
BRIDGE NO.	

DATE	DESCRIPTION

IF A SEAL IS PRESENT ON THIS SHEET IT HAS BEEN ELECTRONICALLY SEALED AND DATED.

MISSOURI HIGHWAYS AND TRANSPORTATION COMMISSION

105 WEST CAPITOL
JEFFERSON CITY, MO 65102
1-888-ASK-MODOT (1-888-275-6636)

TRAFFIC CONTROL
SHEET 7 OF 7

SEC/SUR 10 TWP 27N RGE 14E

U.I.P. AND REHABILITATE EXISTING (56'-71'-71'-56') CONTINUOUS COMPOSITE WIDE FLANGE GIRDER SPANS (SKEW: 31°42'00" L.A.)

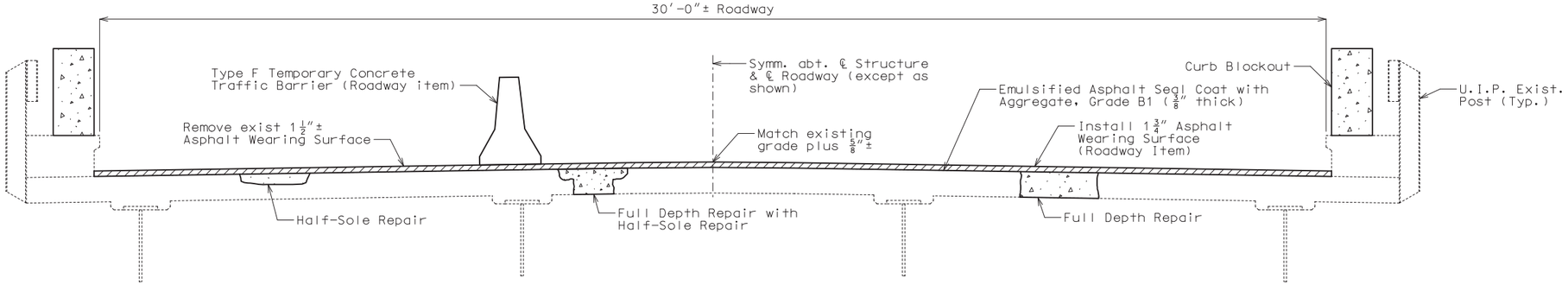

TYPICAL SECTION THRU EXISTING DECK

General Notes:

Design Specifications:

2002 AASTHO LFD (17th Ed.) Standard Specifications
Bridge Deck Rating = 5

Design Loading:

HS20-S16-44 (1961), HS20-44 (New Construction)

Design Unit Stresses:

Class B-1 Concrete (Curb Blockout) f'c = 4,000 psi
Class B-2 Concrete (Slab) f'c = 4,000 psi
Reinforcing Steel (Grade 60) fy = 60,000 psi

Reinforcing Steel:

Minimum clearance to reinforcing steel shall be 1 1/2", unless otherwise shown.

Resin Anchors:

The contractor shall use one of the qualified resin anchor systems in accordance with Sec 1039.

Cost of furnishing and installing the resin anchor systems, complete in place, will be considered completely covered by the contract unit price for Curb Blockout.

The minimum embedment depth in concrete with f'c = 4,000 psi for the resin anchor systems shall be that required to meet the minimum ultimate pullout strength in accordance with Sec 1039 but shall not be less than 5".

An epoxy coated #6 Grade 60 reinforcing bar 2'-0" long shall be substituted for the 3/4"Ø threaded rod.

Miscellaneous:

Roadway surfacing adjacent to bridge ends shall match new bridge wearing surface (roadway item).

All concrete repairs shall be in accordance with Sec 704, unless otherwise noted.

Outline of old work is indicated by light dashed lines. Heavy lines indicate new work.

Contractor shall verify all dimensions if field before ordering new material.

In order to maintain grade and a minimum thickness of wearing surface as shown on plans it may be necessary to use additional quantities of wearing surface at various locations throughout the structure. The cost of furnishing and installing the wearing surface will be considered completely covered in the contract unit price, including all additional labor, materials or equipment for variations in thickness of wearing surface.

Bars bonded in existing concrete not removed shall be cleanly stripped and embedded into new concrete where possible. If length is available, existing bars shall extend into new concrete at least 40 diameters for plain bars and 30 diameters for deformed bars, unless otherwise noted.

The area exposed by the removal of concrete and not covered with new concrete shall be coated with an approved qualified special mortar in accordance with Sec 704.

Traffic Handling:

Traffic to be maintained on structure during construction. See roadway plans for traffic control.

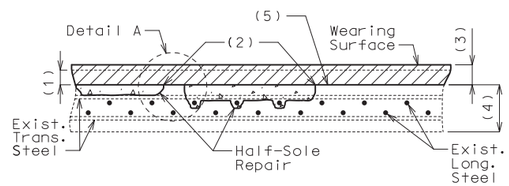

HALF-SOLE REPAIR

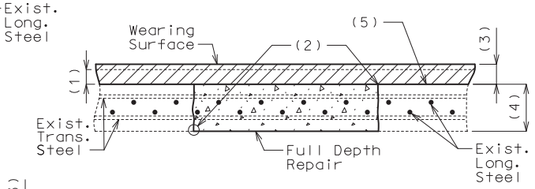

FULL DEPTH REPAIR

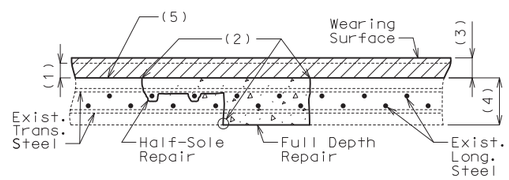

FULL DEPTH REPAIR WITH HALF-SOLE REPAIR

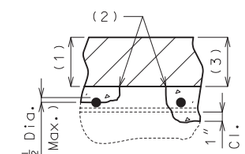

DETAIL A

Clearance around top bar and around bottom bar at the intersection of top bar shall be required when more than half the diameter of the top bar is exposed.

(1) Removal of existing 1 1/2"± asphalt wearing surface

(2) 1" vertical side shall be established outside the deteriorated area.

(3) 1 3/4" minimum asphalt wearing surface

(4) Original depth of deck minus previous scarification

(5) Emulsified Asphalt Seal Coat with Aggregate, Grade B1 (3/8" thick)

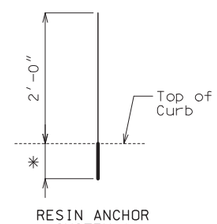

RESIN ANCHOR SYSTEM A

(618 req'd)
(Install in curb)

* Use manufacturer's embedment length (5" minimum embedment).

DETAILS OF RESIN ANCHORS

Estimated Quantities

	Item		Total
**	Removal of Asphalt Wearing Surface	sq. foot	7612
	Removal of Existing Expansion Joint and Adjacent Concrete	linear foot	71
	Remove and Replace Curb	linear foot	8
	Emulsified Asphalt, Seal Coat	gallon	341
	Seal Coat Aggregate, Grade B1	sq. yard	851
	Class B-2 Concrete	cu. yard	8.3
	Curb Blockout	linear foot	510
	Half-Sole Repair	sq. foot	700
	Full Depth Repair	sq. foot	200
	Reinforcing Steel (Epoxy Coated)	pound	540
	Strip Seal Expansion Joint System	linear foot	71

** Doesn't include area of concrete removal at expansion joint.

REPAIRS TO BRIDGE: ROUTE I-55 NB OVER MISSOURI PACIFIC RR & ROUTE U

ROUTE I-55 FROM ROUTE C TO ROUTE HH
ABOUT 2.0 MILES SOUTH OF ROUTE C
BEG. STA. 942+05.09± (Match Existing)

STD. 606.60
STD. 617.10
STD. 617.20
STD. 706.35

Detailed Apr. 2020
Checked May 2020

Note: This drawing is not to scale. Follow dimensions.

STATE OF MISSOURI
DAVID JAMES HAGEMEYER
NUMBER PE-2007002788
PROFESSIONAL ENGINEER
THIS SHEET HAS BEEN SIGNED, SEALED AND DATED ELECTRONICALLY.

DATE PREPARED 5/26/2020
ROUTE I-55 STATE MO
DISTRICT BR SHEET NO. 1
COUNTY SCOTT
JOB NO. J9I3545
CONTRACT ID.
PROJECT NO.
BRIDGE NO. A09131

DESCRIPTION | DATE

MISSOURI HIGHWAYS AND TRANSPORTATION COMMISSION
105 WEST CAPITOL
JEFFERSON CITY, MO 65102
1-888-ASK-MODOT (1-888-275-6636)

IF A SEAL IS PRESENT ON THIS SHEET IT HAS BEEN ELECTRONICALLY SEALED AND DATED.

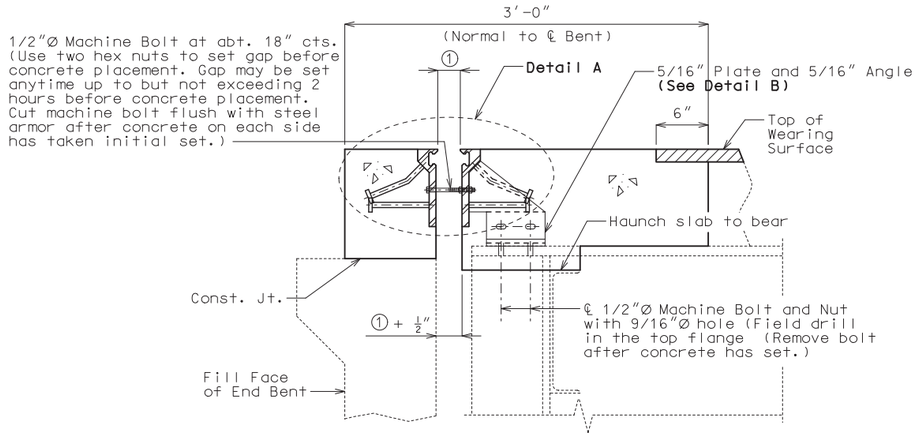

SECTION A-A

Note: Strip seal gland not shown for clarity.

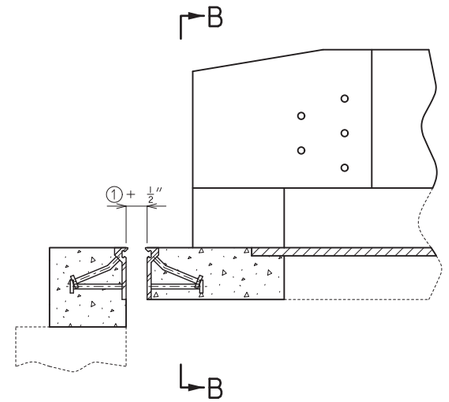

Note: Strip seal gland not shown for clarity.

PART ELEVATION OF BARRIER CURB

GENERAL NOTES:

Expansion joint system shall be fabricated in one section, except for staged construction and when the length is over 50 feet. A complete joint penetration groove welded splice shall be required. Welds shall be ground flush to provide a smooth surface. The expansion joint system shall be fabricated and installed to the crown and grade of the roadway.

The strip seal gland shall be installed in joints in one continuous piece without field splices. Factory splicing will be permitted for joints in excess of 53 feet.

Structural steel for the expansion joint system shall be ASTM A709 Grade 36 except the steel armor may be ASTM A709 Grade 50W. Anchors for the expansion joint system shall be in accordance with Sec 1037. Strip seal expansion joint system shall be in accordance with Sec 717.

Structural steel for the expansion joint system shall be coated with a minimum of two coats of inorganic zinc primer (5 mils minimum) or galvanized in accordance with ASTM A123. Anchors need not be protected from overspray.

Longitudinal reinforcing steel shall be cut/bent so that ends shall be 1" from the vertical leg of the steel armor at the expansion joint system.

Concrete shall be forced under and around steel armor and anchors. Proper consolidation of the concrete shall be achieved by localized internal vibration.

② The installation temperature shall be taken as the actual air temperature averaged over the 24-hour period immediately preceding installation.

③ MoDOT Construction personnel will indicate the strip seal expansion joint system installed.

Steel armor may also be referred to as extrusion or rail.

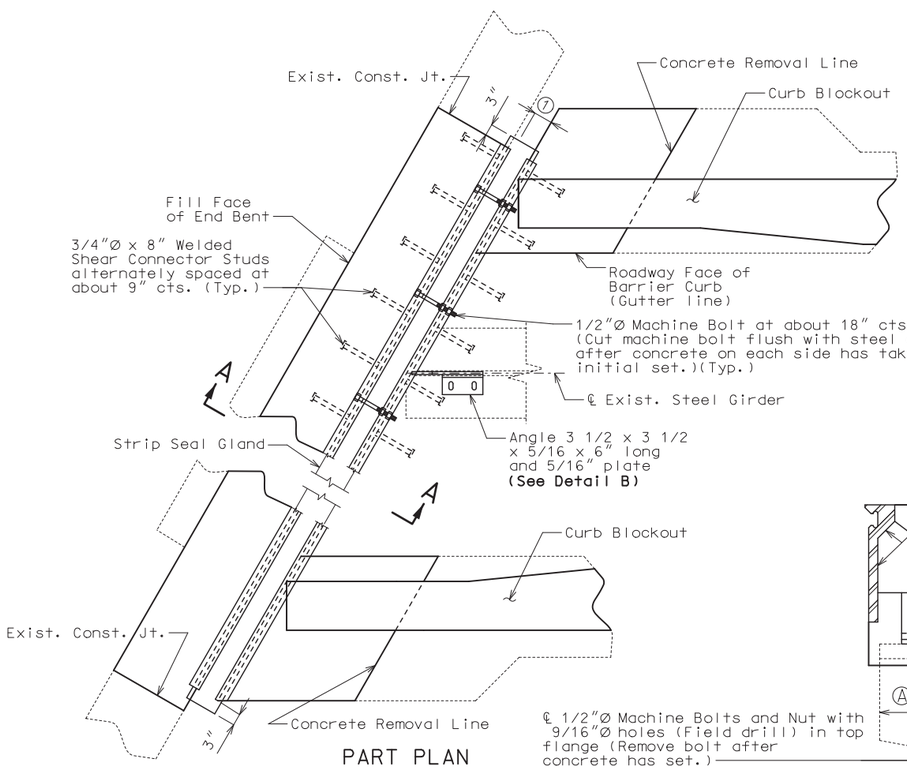

PART PLAN

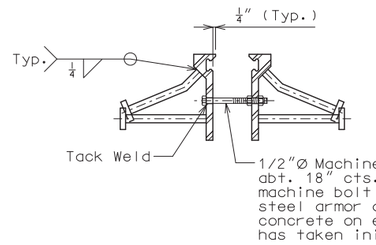

DETAIL A

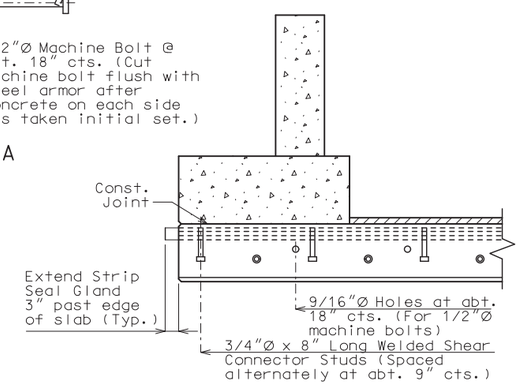

PART SECTION B-B

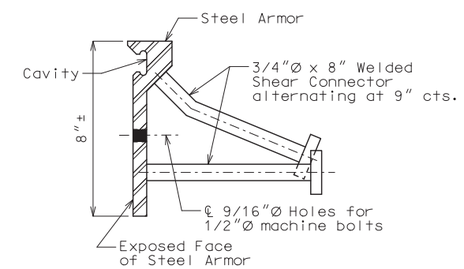

DETAIL OF JOINT ARMOR

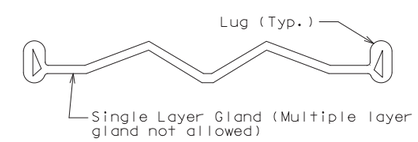

DETAIL OF GLAND

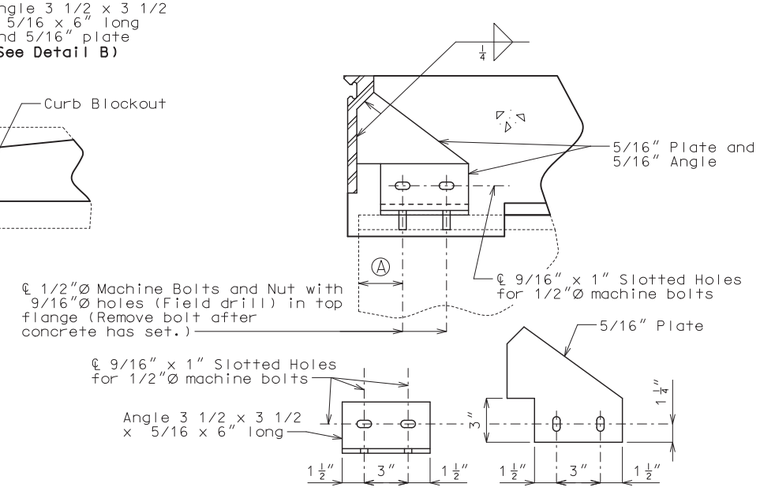

DETAIL B

Table of Allowed Transverse Strip Seal Expansion Joint System

Manufacturer	Strip Seal System (Designated Name)	Movement Parallel to RDWY	① Allowed Installation Gap Normal to Joint at RDWY Surface @ Air/Surface Temperature ②						③
			@ 40°F	@ 50°F	@ 60°F	@ 70°F	@ 80°F	@ 90°F	
D S Brown	Strip seal L2-400	1 13/16"	2 3/16"	2 1/8"	2"	1 7/8"	1 13/16"	1 11/16"	□
D S Brown	Strip seal L2-500	1 13/16"	2 3/16"	2 1/8"	2"	1 7/8"	1 13/16"	1 11/16"	□
Watson Bowman Acme (Wabo)	Strip seal SE-300	1 13/16"	2 3/16"	2 1/8"	2"	1 7/8"	1 13/16"	1 11/16"	□
Watson Bowman Acme (Wabo)	Strip seal SE-400	1 13/16"	2 3/16"	2 1/8"	2"	1 7/8"	1 13/16"	1 11/16"	□

DETAILS OF STRIP SEAL EXPANSION JOINT SYSTEM AT END BENTS NO. 1 & 5

Detailed Apr. 2020
Checked May 2020

Note: This drawing is not to scale. Follow dimensions.

STATE OF MISSOURI
DAVID JAMES HAGEMEYER
NUMBER PE-2007002788
PROFESSIONAL ENGINEER
THIS SHEET HAS BEEN SIGNED, SEALED AND DATED ELECTRONICALLY.

DATE PREPARED	
5/26/2020	
ROUTE I-55	STATE MO
DISTRICT BR	SHEET NO. 2
COUNTY SCOTT	
JOB NO. J9I3545	
CONTRACT ID.	
PROJECT NO.	
BRIDGE NO. A90131	

DATE	DESCRIPTION

IF A SEAL IS PRESENT ON THIS SHEET IT HAS BEEN ELECTRONICALLY SEALED AND DATED.

MISSOURI HIGHWAYS AND TRANSPORTATION COMMISSION
105 WEST CAPITOL
JEFFERSON CITY, MO 65102
1-888-ASK-MODOT (1-888-275-6636)

PART SECTION A-A

(Normal to ℄ Bent)

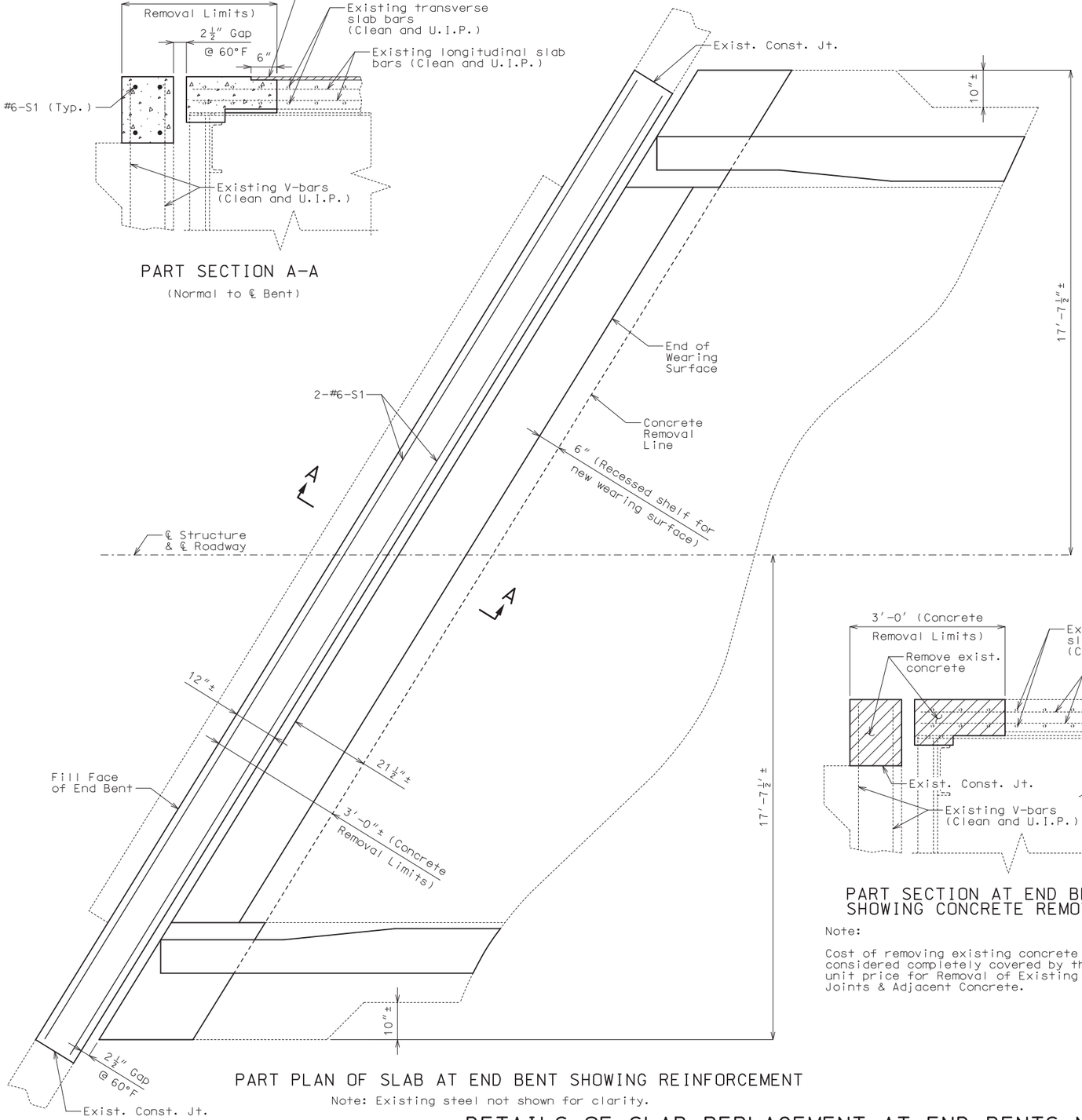

PART PLAN OF SLAB AT END BENT SHOWING REINFORCEMENT

Note: Existing steel not shown for clarity.

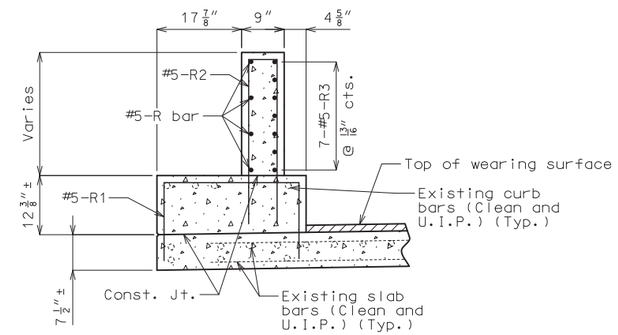

PART SECTION B-B

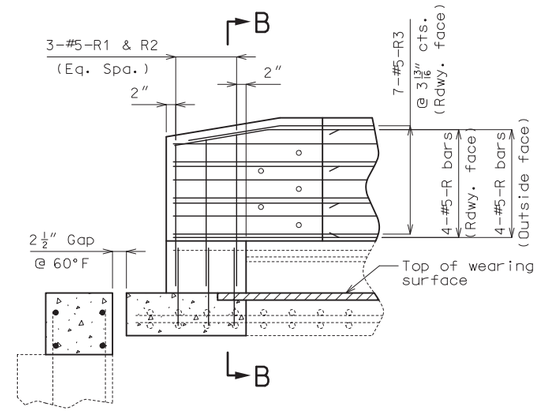

PART ELEVATION OF CURB BLOCKOUT AND CURB

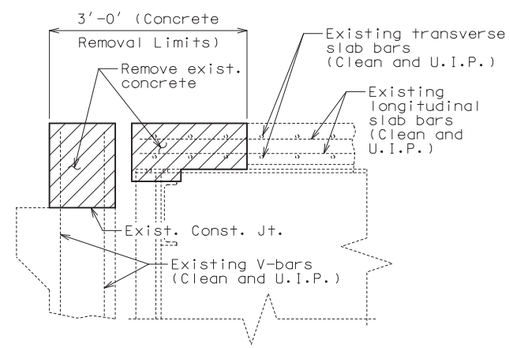

PART SECTION AT END BENT
SHOWING CONCRETE REMOVAL

Note:

Cost of removing existing concrete will be considered completely covered by the contract unit price for Removal of Existing Expansion Joints & Adjacent Concrete.

Notes:

The #6-S1 bars to be segmented to accommodate stage construction. The total bar length for #6-S1 bars shown in Bill of Reinforcing Steel allows for one lap splice with a length of 3'-10". Actual bar segment lengths to be determined by contractor. The contractor may use a mechanical bar splice in lieu of a lap splice. When a mechanical bar splice is used, the actual bar segment length will be determined by the contractor to accommodate manufacturer's recommendations for installation and stage construction. The cost of furnishing and installing the bar splices will be considered completely covered by the contract unit price for Reinforcing Steel (Epoxy Coated). No adjustment of the quantity of reinforcing steel will be allowed for the use of mechanical bar splices.

Top of curb blockout and curb shall be built parallel to grade with curb joints normal to grade.

All exposed edges of curb blockout and curb shall have either a 1/2-inch radius or a 3/8-inch bevel, unless otherwise noted.

Concrete in the curb blockout and curb shall be Class B-1.

Slab concrete shall be Class B-2.

Payment for removal and replacement of all concrete and reinforcement in curb in the limits shown, complete in place, will be considered completely covered by the contract unit price for Remove and Replace Curb.

Existing reinforcement not embedded in left-in-place concrete shall be removed, cleaned and reused or replaced with in-kind new epoxy coated reinforcement.

Top of backwall for End Bents No. 1 & 5 shall be formed to the crown and grade of the roadway. Backwall above upper construction joint shall not be poured until the superstructure slab has been poured in the adjacent span.

For Details of Strip Seal, see Sheet No. 2.

For Details of Curb Blockout, see Sheets No. 4 thru 6.

DETAILS OF SLAB REPLACEMENT AT END BENTS NO. 1 & 5

(End Bent No. 1 shown, End Bent No. 5 similar)

Detailed Apr. 2020
Checked May 2020

Note: This drawing is not to scale. Follow dimensions.

STATE OF MISSOURI
DAVID JAMES HAGEMEYER
NUMBER PE-2007002788
PROFESSIONAL ENGINEER

THIS SHEET HAS BEEN SIGNED, SEALED AND DATED ELECTRONICALLY.

DATE PREPARED	5/26/2020
ROUTE	I-55
STATE	MO
DISTRICT	BR
SHEET NO.	3
COUNTY	SCOTT
JOB NO.	J9I3545
CONTRACT ID.	
PROJECT NO.	
BRIDGE NO.	A09131

DESCRIPTION

DATE

MISSOURI HIGHWAYS AND TRANSPORTATION COMMISSION

105 WEST CAPITOL
JEFFERSON CITY, MO 65102
1-888-ASK-MODOT (1-888-275-6636)

IF A SEAL IS PRESENT ON THIS SHEET IT HAS BEEN ELECTRONICALLY SEALED AND DATED.

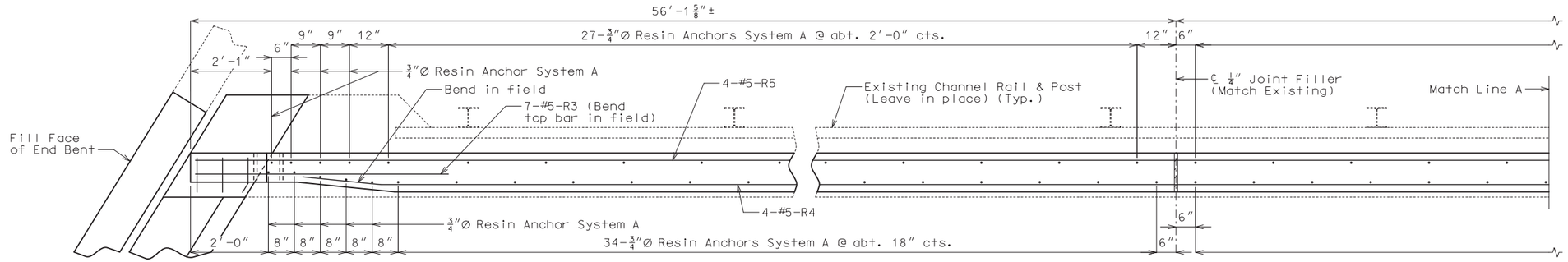

SPAN (1-2)

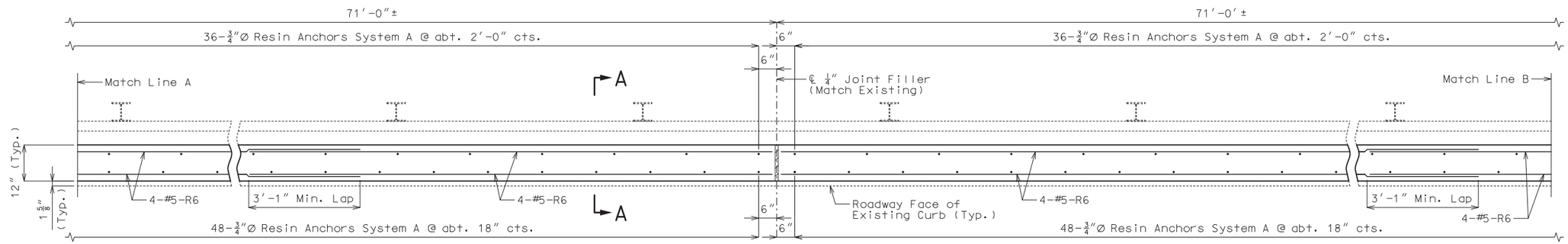

SPAN (2-3) SPAN (3-4)

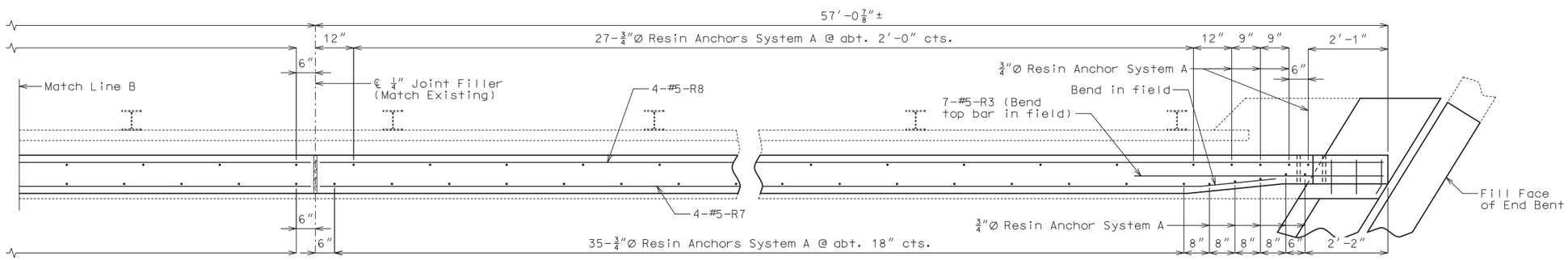

SPAN (4-5)

Notes:

Longitudinal dimensions are along grade and are taken at top outside edge of curb.

Top of curb blockout shall be built parallel to grade with curb blockout joints (except at end bents) normal to grade.

Concrete in the curb blockout shall be Class B-1.

All exposed edges of curb blockout shall have either a 1/2-inch radius or a 3/8-inch bevel, unless otherwise noted.

Payment for concrete, reinforcement, resin anchor systems and any other work incidental to the curb blockout, complete in place, will be considered completely covered by the contract unit price for Curb Blockout per linear foot.

Measurement of curb blockout is to the nearest linear foot for each structure, measured along the inside edge of curb from end of slab to end of slab.

Concrete traffic barrier delineators shall be placed on top of the curb blockout similarly as shown on Missouri Standard Plan 617.10 and in accordance with Sec 617. Delineators on bridges with two-lane, two-way traffic shall have retroreflective sheeting on both sides. Concrete traffic barrier delineators will be considered completely covered by the contract unit price for Curb Blockout.

PLAN OF LEFT CURB BLOCKOUT

(Right curb blockout similar by 180° rotation)
(New wearing surface not shown)

Cost of any concrete curb repair will be considered completely covered by the contract unit price for Curb Blockout.

The 1/4-inch joints may be either formed joints with joint filler or saw-cut joints.

Joint sealant and backer rods shall be in accordance with Sec 717 for Silicone Joint Sealant for Saw Cut and Formed Joints.

For additional details of end of blockout, see Sheet No. 5.

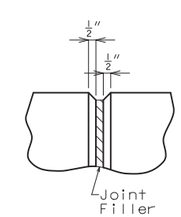

FILLED JOINT DETAIL

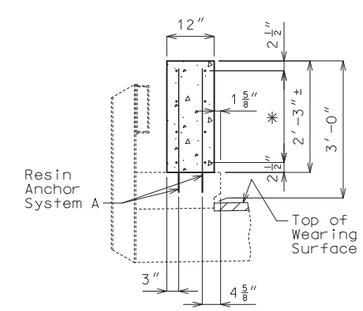

SECTION A-A

✳ 4-#5-R bars (Each face) (Equally spaced)

CURB BLOCKOUT

Detailed Apr. 2020
Checked May 2020

Note: This drawing is not to scale. Follow dimensions.

STATE OF MISSOURI
DAVID JAMES HAGEMEYER
NUMBER PE-2007002788
PROFESSIONAL ENGINEER
THIS SHEET HAS BEEN SIGNED, SEALED AND DATED ELECTRONICALLY.

DATE PREPARED	
5/26/2020	
ROUTE I-55	STATE MO
DISTRICT BR	SHEET NO. 4
COUNTY SCOTT	
JOB NO. J9I3545	
CONTRACT ID.	
PROJECT NO.	
BRIDGE NO. A09131	

DATE	DESCRIPTION

MISSOURI HIGHWAYS AND TRANSPORTATION COMMISSION
105 WEST CAPITOL
JEFFERSON CITY, MO 65102
1-888-ASK-MODOT (1-888-275-6636)

IF A SEAL IS PRESENT ON THIS SHEET IT HAS BEEN ELECTRONICALLY SEALED AND DATED.

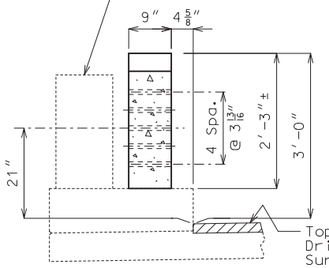

PART SECTION THRU END OF BLOCKOUT

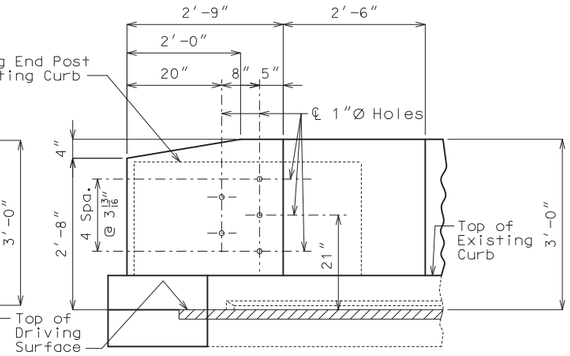

PART ELEVATION SHOWING END OF BLOCKOUT

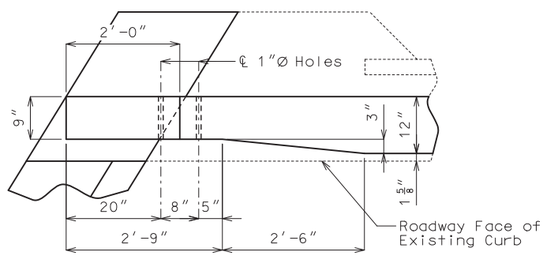

PART PLAN SHOWING END OF BLOCKOUT

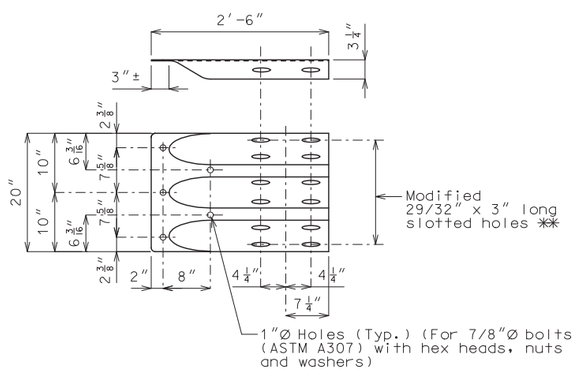

** Tighten bolts, back off 1/2 turn and burr threads Allow for sliding between Modified Bridge Anchor Section (Thrie Beam) and End Post.

MODIFIED TERMINAL CONNECTION AT ABUTMENTS (ROADWAY ITEM)

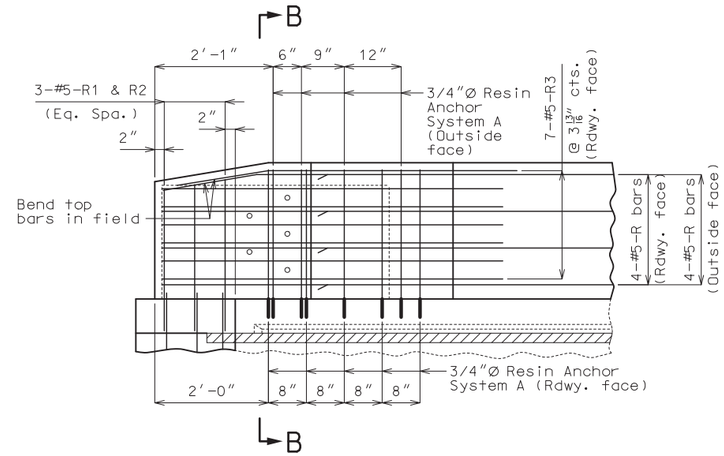

PART ELEVATION OF END OF BLOCKOUT AT END BENT NO. 1 SHOWING REINFORCEMENT

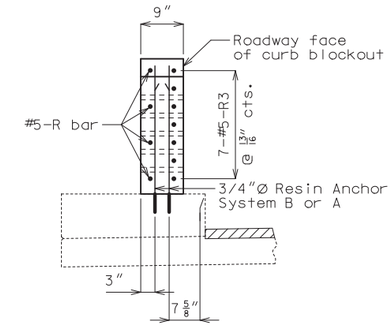

ELEVATION B-B

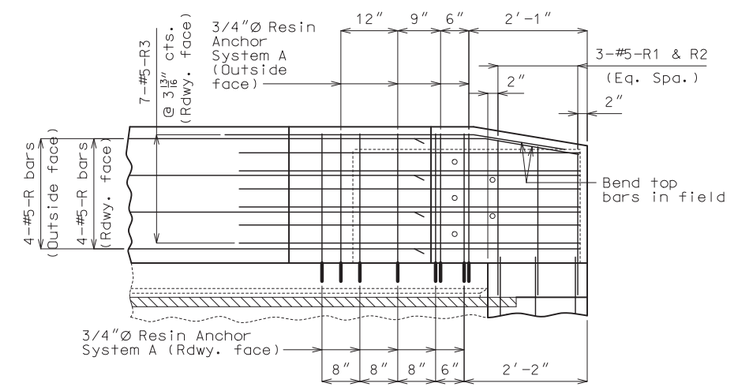

PART ELEVATION OF END OF BLOCKOUT AT END BENT NO. 5 SHOWING REINFORCEMENT

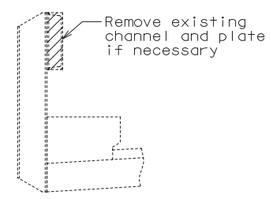

TYPICAL SECTION THRU RAILING SHOWING CHANNEL REMOVAL

Cost of channel removal will be considered completely covered by the contract unit price for Curb Blockout.

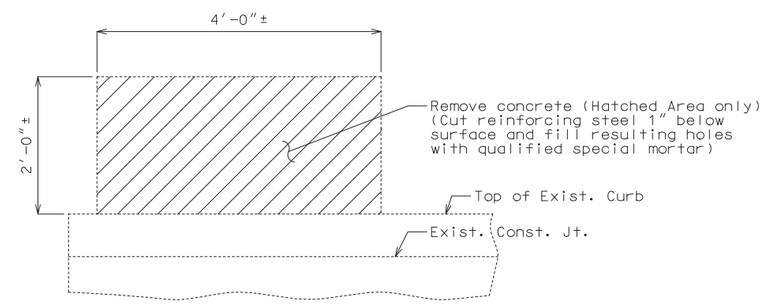

PART ELEVATION SHOWING END POSTS CONCRETE REMOVAL

(Slab and curb concrete removal not shown for clarity)
(End Bent No. 1 shown, End Bent No. 5 Similar)

Note:

Cost of removing existing end posts will be considered completely covered by the contract unit price for Curb Blockout.

Notes:

Work this sheet with Sheets No. 4 & 6.

All curb blockout reinforcement shall be epoxy coated.

For details of resin anchor system, see Sheet No. 1.

LEFT CURB BLOCKOUT AT END BENTS

(Right curb blockout similar by 180° rotation)

Detailed Apr. 2020
Checked May 2020

Note: This drawing is not to scale. Follow dimensions.

STATE OF MISSOURI
DAVID JAMES HAGEMEYER
NUMBER PE-2007002788
PROFESSIONAL ENGINEER

THIS SHEET HAS BEEN SIGNED, SEALED AND DATED ELECTRONICALLY.

DATE PREPARED	
5/26/2020	
ROUTE	STATE
I-55	MO
DISTRICT	SHEET NO.
BR	5
COUNTY	
SCOTT	
JOB NO.	
J9I3545	
CONTRACT ID.	
PROJECT NO.	
BRIDGE NO.	
A09131	

DATE	DESCRIPTION

MISSOURI HIGHWAYS AND TRANSPORTATION COMMISSION
105 WEST CAPITOL
JEFFERSON CITY, MO 65102
1-888-ASK-MODOT (1-888-275-6636)

IF A SEAL IS PRESENT ON THIS SHEET IT HAS BEEN ELECTRONICALLY SEALED AND DATED.

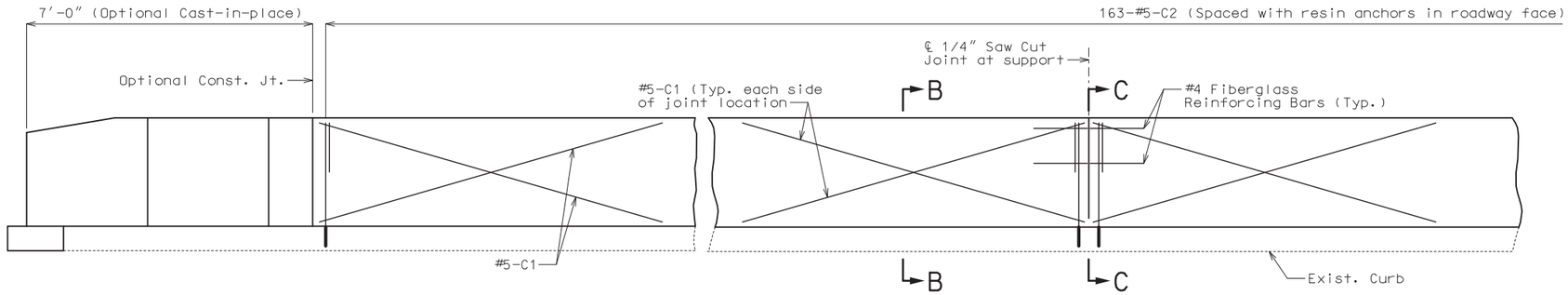

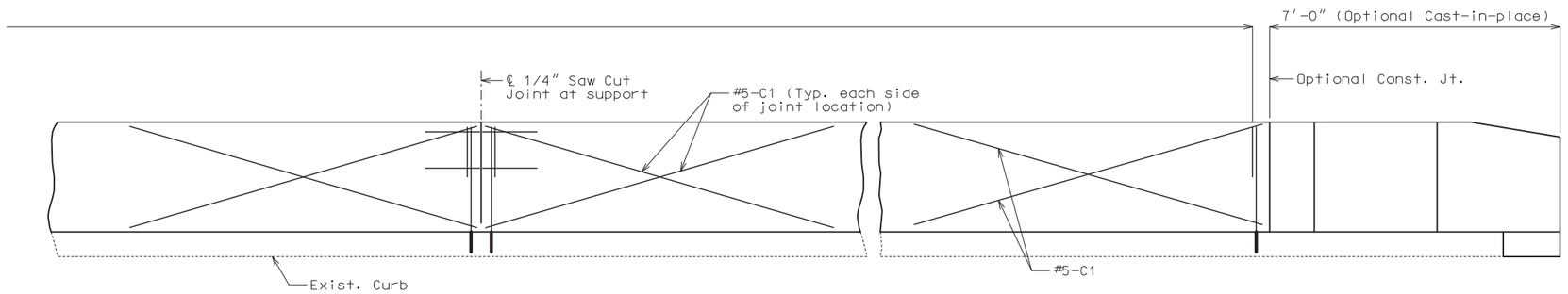

TYPICAL ELEVATION OF CURB BLOCKOUT AT SUPPORT LOCATIONS

Horizontal R bars and rail attachment holes not shown for clarity. C bars and textured fiberglass bars shall be used in addition to reinforcement shown for conventional forming.

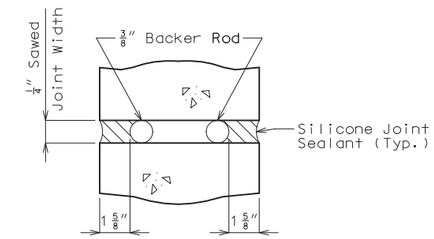

SECTION A-A

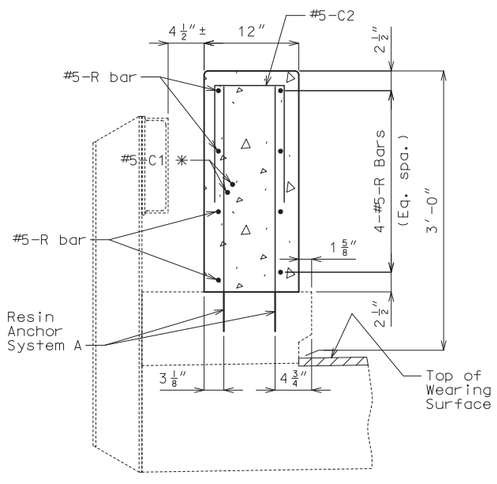

SECTION B-B

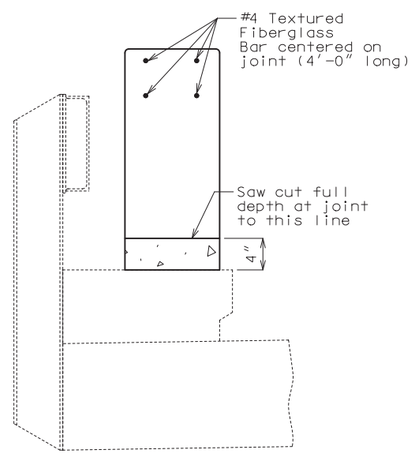

SECTION C-C

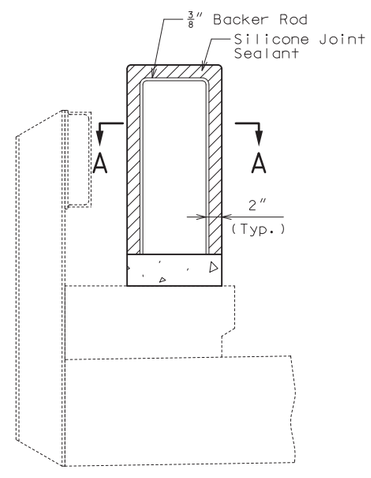

SECTION THRU SAW CUT JOINT

Notes:

Work this sheet with Sheets No. 4 & 5.

Joint sealant and backer rods shall be in accordance with Sec 717 for silicone joint sealant for saw cut and formed joints.

For slip-formed option, both sides of the curb blockout shall have a vertically broomed finish and the top shall have a transversely broomed finish.

Cost of silicone joint sealant and backer rod, complete in place, will be considered completely covered by the contract unit price for Curb Blockout.

General notes shown for conventionally formed curb blockouts also apply to slip-formed curb blockouts.

Channel, posts and concrete end posts shall be removed if necessary for slip forming. Removal cost will be considered completely covered by the contract unit price for Curb Blockout.

✳ Each side of joint location.

Note: C2 bars spaced with resin anchor systems in roadway face of 12" wide curb blockout.

OPTIONAL SLIP-FORMED CURB BLOCKOUT

Detailed Apr. 2020
Checked May 2020

Note: This drawing is not to scale. Follow dimensions.

STATE OF MISSOURI
DAVID JAMES HAGEMEYER
NUMBER PE-2007002788
PROFESSIONAL ENGINEER

THIS SHEET HAS BEEN SIGNED, SEALED AND DATED ELECTRONICALLY.

DATE PREPARED	5/26/2020
ROUTE	I-55
STATE	MO
DISTRICT	BR
SHEET NO.	6
COUNTY	SCOTT
JOB NO.	J9I3545
CONTRACT ID.	
PROJECT NO.	
BRIDGE NO.	A09131

DESCRIPTION

DATE

MISSOURI HIGHWAYS AND TRANSPORTATION COMMISSION
105 WEST CAPITOL
JEFFERSON CITY, MO 65102
1-888-ASK-MODOT (1-888-275-6636)

IF A SEAL IS PRESENT ON THIS SHEET IT HAS BEEN ELECTRONICALLY SEALED AND DATED.

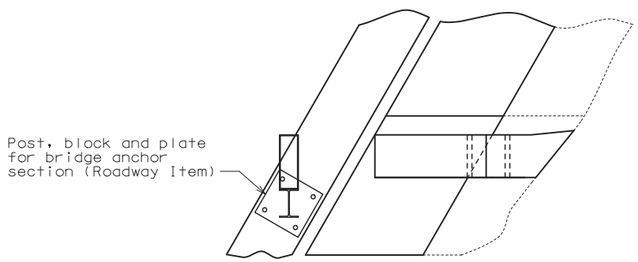

PART PLAN OF CURB BLOCKOUT
AT END BENT SHOWING
POST AND PLATE INSTALLATION

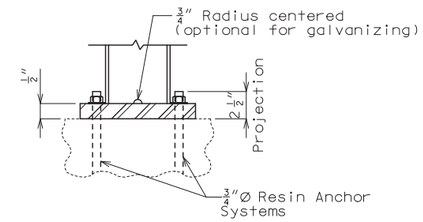

PART ELEVATION OF POST

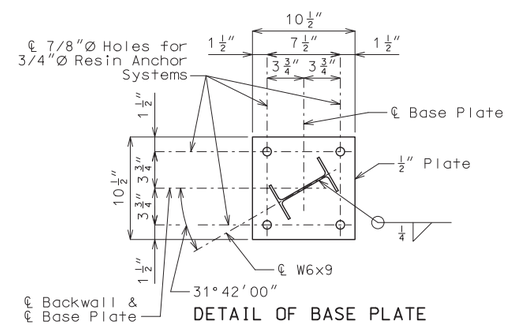

POST AND PLATE DETAIL
(ROADWAY ITEM)

(4 Required)

Resin Anchor Notes:

The contractor shall use one of the qualified resin anchor systems in accordance with Sec 1039.

The minimum embedment depth in concrete with f'c = 4,000 psi for the resin anchor system shall be that required to meet the minimum ultimate pullout strength in accordance with Sec 1039 but shall not be less than 5".

Cost of furnishing and installing the resin anchor system, complete in place, will be considered completely covered by other item.

Detailed Apr. 2020
Checked May 2020

Note: This drawing is not to scale. Follow dimensions.

STATE OF MISSOURI
DAVID JAMES HAGEMEYER
NUMBER PE-2007002788
PROFESSIONAL ENGINEER

THIS SHEET HAS BEEN SIGNED, SEALED AND DATED ELECTRONICALLY.

DATE PREPARED	
5/26/2020	
ROUTE	STATE
I-55	MO
DISTRICT	SHEET NO.
BR	7
COUNTY	
SCOTT	
JOB NO.	
J9I3545	
CONTRACT ID.	
PROJECT NO.	
BRIDGE NO.	
A09131	

DATE	DESCRIPTION

MISSOURI HIGHWAYS AND TRANSPORTATION COMMISSION
105 WEST CAPITOL
JEFFERSON CITY, MO 65102
1-888-ASK-MODOT (1-888-275-6636)

IF A SEAL IS PRESENT ON THIS SHEET IT HAS BEEN ELECTRONICALLY SEALED AND DATED.

BILL OF REINFORCING STEEL

NO. REQ'D.	MARK NO. SIZE	MARK NO. MARK	LOCATION	EPOXY (E)	SHAPE NO.	STIRRUP (S)	SUBSTR. (X)	VARIES (V)	NO. EACH	B FT. IN.	C FT. IN.	D FT. IN.	E FT. IN.	F FT. IN.	H FT. IN.	K FT. IN.	NOMINAL LENGTH FT. IN.	ACTUAL LENGTH FT. IN.	WEIGHT LBS.
			SLAB																
8		6 S1	SLAB	E	20					45 0.000							45 0	45 0	541
			CURB																
			BLOCKOUT																
12		5 R1	BLOCKOUT	E	10	S					16.375	2 9.500					5 6	5 4	67
12		6 R2	BLOCKOUT	E	10	S					2 11.500	6.000					6 5	6 1	110
28		5 R3	BLOCKOUT	E	20					6 6.000							6 6	6 6	190
8		5 R4	BLOCKOUT	E	20					53 2.000							53 2	53 2	444
8		5 R5	BLOCKOUT	E	20					55 10.000							55 10	55 10	466
64		5 R6	BLOCKOUT	E	20					36 11.000							36 11	36 11	2464
8		5 R7	BLOCKOUT	E	20					54 1.000							54 1	54 1	451
8		5 R8	BLOCKOUT	E	20					56 9.000							56 9	56 9	474
			SLIP FORM																
32		5 C1	SLIP FORM	E	20					10 0.000							10 0	10 0	334
330		5 C2	SLIP FORM	E	10	S					15.000	9.000					3 3	3 1	1061
			TOTALS																
	5			E															5951
	6			E															651
			TOTAL																0
			TOTAL	E															6602
			Slab on Girder																
	5			E															4556
	6			E															651
			TOTAL																5207
			Slip Form Option																
	5			E															1395
			TOTAL																1395

BILL OF REINFORCING STEEL

NO. REQ'D.	MARK NO. SIZE	MARK NO. MARK	LOCATION	EPOXY (E)	SHAPE NO.	STIRRUP (S)	SUBSTR. (X)	VARIES (V)	NO. EACH	B FT. IN.	C FT. IN.	D FT. IN.	E FT. IN.	F FT. IN.	H FT. IN.	K FT. IN.	NOMINAL LENGTH FT. IN.	ACTUAL LENGTH FT. IN.	WEIGHT LBS.

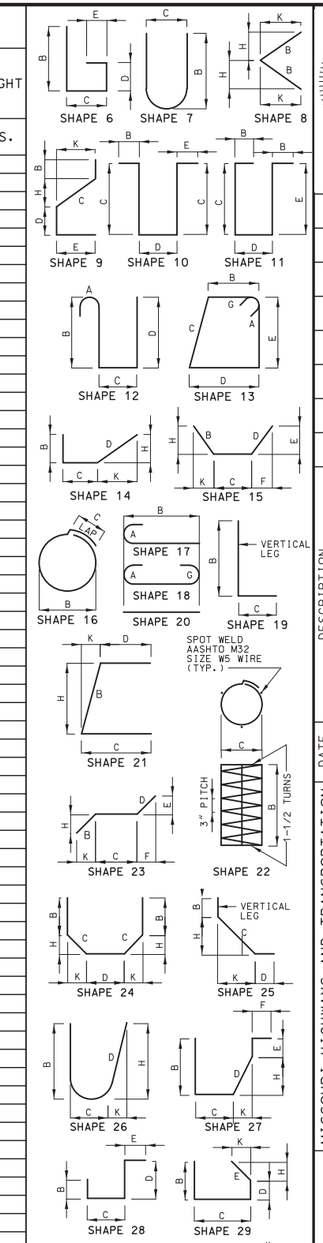

BENDING DIAGRAMS

STATE OF MISSOURI
DAVID JAMES HAGEMEYER
NUMBER PE-2007002788
PROFESSIONAL ENGINEER

THIS SHEET HAS BEEN SIGNED, SEALED AND DATED ELECTRONICALLY.

DATE PREPARED 5/26/2020

ROUTE	STATE
I-55	MO
DISTRICT	SHEET NO.
BR	8

COUNTY: SCOTT

JOB NO. J9I3545

CONTRACT ID.

PROJECT NO.

BRIDGE NO. A09131

DATE	DESCRIPTION

MISSOURI HIGHWAYS AND TRANSPORTATION COMMISSION
105 WEST CAPITOL
JEFFERSON CITY, MO 65102
1-888-ASK-MODOT (1-888-275-6636)

IF A SEAL IS PRESENT ON THIS SHEET IT HAS BEEN ELECTRONICALLY SEALED AND DATED.

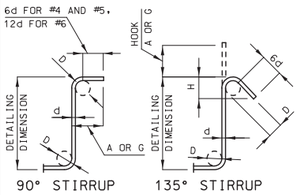

STIRRUP HOOK DIMENSIONS				
GRADES 40 - 50 - 60 KSI				
BAR SIZE	D (IN.)	90° HOOK	135° HOOK	
		HOOK A OR G	HOOK A OR G	APPROX. H
#4	2"	4 1/2"	4 1/2"	3"
#5	2 1/2"	6"	5 1/2"	3 3/4"
#6	4 1/2"	12"	8"	4 1/2"

NOTE: UNLESS OTHERWISE NOTED, DIAMETER "D" IS THE SAME FOR ALL BENDS AND HOOKS ON A BAR.

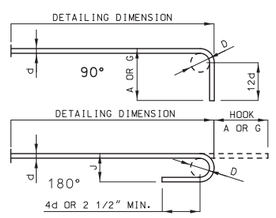

END HOOK DIMENSIONS				
BAR SIZE	D (IN.)	ALL GRADES		
		180° HOOKS		90° HOOKS
		A OR G	J	A OR G
#3	2 1/4"	5"	3"	6"
#4	3"	6"	4"	8"
#5	3 3/4"	7"	5"	10"
#6	4 1/2"	8"	6"	12"
#7	5 1/4"	10"	7"	14"
#8	6"	11"	8"	16"
#9	9 1/2"	15"	11 3/4"	19"
#10	10 3/4"	17"	13 1/4"	22"
#11	12"	19"	14 3/4"	2'-0"
#14	18 1/4"	2'-3"	21 3/4"	2'-7"

NOTE:
ALL STANDARD HOOKS AND BENDS OTHER THAN 180 DEGREE ARE TO BE BENT WITH SAME PROCEDURE AS FOR 90 DEGREE STANDARD HOOKS.

HOOKS AND BENDS SHALL BE IN ACCORDANCE WITH THE PROCEDURES AS SHOWN ON THIS SHEET.

E = EPOXY COATED REINFORCEMENT.
S = STIRRUP.
X = BAR IS INCLUDED IN SUBSTRUCTURE QUANTITIES.
V = BAR DIMENSIONS VARY IN EQUAL INCREMENTS BETWEEN DIMENSIONS SHOWN ON THIS LINE AND THE FOLLOWING LINE.
NO. EA. = NUMBER OF BARS OF EACH LENGTH.

NOMINAL LENGTHS ARE BASED ON OUT TO OUT DIMENSIONS SHOWN IN BENDING DIAGRAMS AND ARE LISTED FOR FABRICATORS USE. (NEAREST INCH)

ACTUAL LENGTHS ARE MEASURED ALONG CENTERLINE BAR TO THE NEAREST INCH.

PAYWEIGHTS ARE BASED ON ACTUAL LENGTHS.

FOUR ANGLE OR CHANNEL SPACERS ARE REQUIRED FOR EACH COLUMN SPIRAL. SPACERS ARE TO BE PLACED ON INSIDE OF SPIRALS. LENGTH AND WEIGHT OF COLUMN SPIRALS DO NOT INCLUDE SPLICES OR SPACERS.

REINFORCING STEEL (GRADE 60) FY = 60,000 PSI.

Detailed Apr. 2020
Checked May 2020

Note: This drawing is not to scale. Follow dimensions.

SEC/SUR 10 TWP 27N RGE 14E

U.I.P. AND REHABILITATE EXISTING (56'-71'-71'-56') CONTINUOUS COMPOSITE WIDE FLANGE GIRDER SPANS (SKEW: 31°42'00" L.A.)

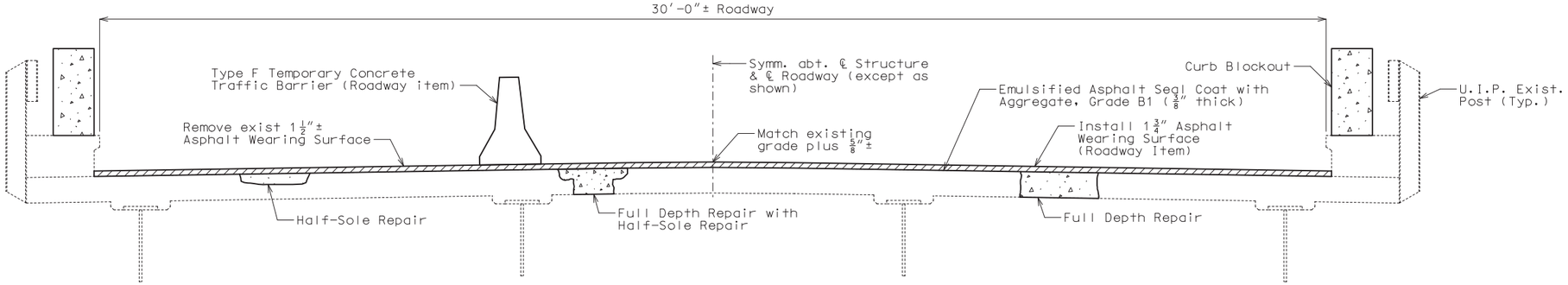

TYPICAL SECTION THRU EXISTING DECK

General Notes:

Design Specifications:

2002 AASTHO LFD (17th Ed.) Standard Specifications
Bridge Deck Rating = 5

Design Loading:

HS20-S16-44 (1961), HS20-44 (New Construction)

Design Unit Stresses:

Class B-1 Concrete (Curb Blockout) f'c = 4,000 psi
Class B-2 Concrete (Slab) f'c = 4,000 psi
Reinforcing Steel (Grade 60) fy = 60,000 psi

Reinforcing Steel:

Minimum clearance to reinforcing steel shall be 1 1/2", unless otherwise shown.

Resin Anchors:

The contractor shall use one of the qualified resin anchor systems in accordance with Sec 1039.

Cost of furnishing and installing the resin anchor systems, complete in place, will be considered completely covered by the contract unit price for Curb Blockout.

The minimum embedment depth in concrete with f'c = 4,000 psi for the resin anchor systems shall be that required to meet the minimum ultimate pullout strength in accordance with Sec 1039 but shall not be less than 5".

An epoxy coated #6 Grade 60 reinforcing bar 2'-0" long shall be substituted for the 3/4"Ø threaded rod.

Miscellaneous:

Roadway surfacing adjacent to bridge ends shall match new bridge wearing surface (roadway item).

All concrete repairs shall be in accordance with Sec 704, unless otherwise noted.

Outline of old work is indicated by light dashed lines. Heavy lines indicate new work.

Contractor shall verify all dimensions if field before ordering new material.

In order to maintain grade and a minimum thickness of wearing surface as shown on plans it may be necessary to use additional quantities of wearing surface at various locations throughout the structure. The cost of furnishing and installing the wearing surface will be considered completely covered in the contract unit price, including all additional labor, materials or equipment for variations in thickness of wearing surface.

Bars bonded in existing concrete not removed shall be cleanly stripped and embedded into new concrete where possible. If length is available, existing bars shall extend into new concrete at least 40 diameters for plain bars and 30 diameters for deformed bars, unless otherwise noted.

The area exposed by the removal of concrete and not covered with new concrete shall be coated with an approved qualified special mortar in accordance with Sec 704.

Traffic Handling:

Traffic to be maintained on structure during construction. See roadway plans for traffic control.

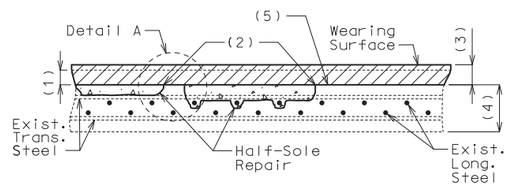

HALF-SOLE REPAIR

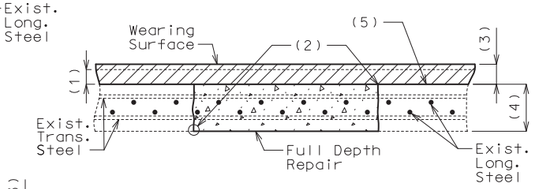

FULL DEPTH REPAIR

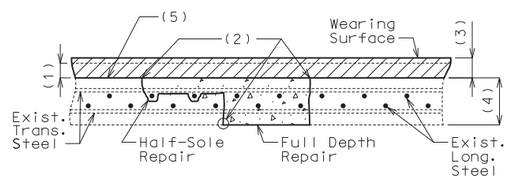

FULL DEPTH REPAIR WITH HALF-SOLE REPAIR

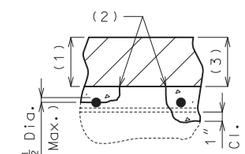

DETAIL A

Clearance around top bar and around bottom bar at the intersection of top bar shall be required when more than half the diameter of the top bar is exposed.

(1) Removal of existing 1 1/2"± asphalt wearing surface

(2) 1" vertical side shall be established outside the deteriorated area.

(3) 1 3/4" minimum asphalt wearing surface

(4) Original depth of deck minus previous scarification

(5) Emulsified Asphalt Seal Coat with Aggregate, Grade B1 (3/8" thick)

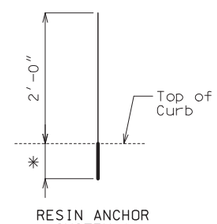

RESIN ANCHOR SYSTEM A

(630 req'd)
(Install in curb)

* Use manufacturer's embedment length (5" minimum embedment).

DETAILS OF RESIN ANCHORS

Estimated Quantities

	Item		Total
**	Removal of Asphalt Wearing Surface	sq. foot	7612
	Removal of Existing Expansion Joint and Adjacent Concrete	linear foot	71
	Remove and Replace Curb	linear foot	8
	Emulsified Asphalt, Seal Coat	gallon	341
	Seal Coat Aggregate, Grade B1	sq. yard	851
	Class B-2 Concrete	cu. yard	8.3
	Curb Blockout	linear foot	510
	Half-Sole Repair	sq. foot	500
	Full Depth Repair	sq. foot	200
	Reinforcing Steel (Epoxy Coated)	pound	540
	Strip Seal Expansion Joint System	linear foot	71

** Doesn't include area of concrete removal at expansion joint.

REPAIRS TO BRIDGE: ROUTE I-55 SB
OVER MISSOURI PACIFIC RR & ROUTE U

ROUTE I-55 FROM ROUTE C TO ROUTE HH
ABOUT 2.0 MILES SOUTH OF ROUTE C
BEG. STA. 941+53.21± (Match Existing)

STD. 606.60
STD. 617.10
STD. 617.20
STD. 706.35

STATE OF MISSOURI
DAVID JAMES HAGEMEYER
NUMBER PE-2007002788
PROFESSIONAL ENGINEER
THIS SHEET HAS BEEN SIGNED, SEALED AND DATED ELECTRONICALLY.

DATE PREPARED 5/26/2020
ROUTE I-55 STATE MO
DISTRICT BR SHEET NO. 1
COUNTY SCOTT
JOB NO. J9I3545
CONTRACT ID.
PROJECT NO.
BRIDGE NO. A09132

DESCRIPTION
DATE

MISSOURI HIGHWAYS AND TRANSPORTATION COMMISSION
105 WEST CAPITOL
JEFFERSON CITY, MO 65102
1-888-ASK-MODOT (1-888-275-6636)

IF A SEAL IS PRESENT ON THIS SHEET IT HAS BEEN ELECTRONICALLY SEALED AND DATED.

Detailed Apr. 2020
Checked May 2020

Note: This drawing is not to scale. Follow dimensions.

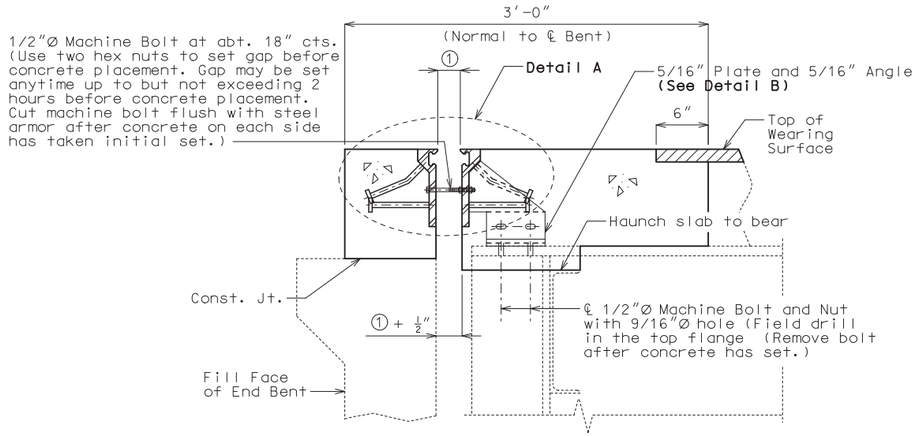

SECTION A-A

Note: Strip seal gland not shown for clarity.

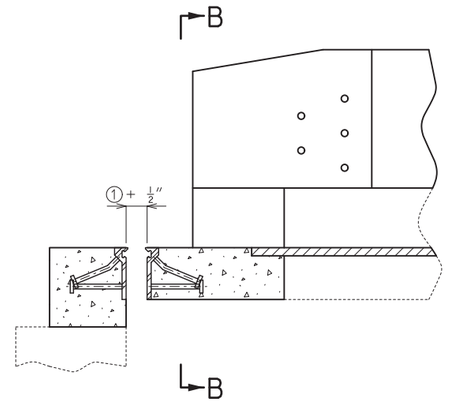

Note: Strip seal gland not shown for clarity.

PART ELEVATION OF BARRIER CURB

GENERAL NOTES:

Expansion joint system shall be fabricated in one section, except for staged construction and when the length is over 50 feet. A complete joint penetration groove welded splice shall be required. Welds shall be ground flush to provide a smooth surface. The expansion joint system shall be fabricated and installed to the crown and grade of the roadway.

The strip seal gland shall be installed in joints in one continuous piece without field splices. Factory splicing will be permitted for joints in excess of 53 feet.

Structural steel for the expansion joint system shall be ASTM A709 Grade 36 except the steel armor may be ASTM A709 Grade 50W. Anchors for the expansion joint system shall be in accordance with Sec 1037. Strip seal expansion joint system shall be in accordance with Sec 717.

Structural steel for the expansion joint system shall be coated with a minimum of two coats of inorganic zinc primer (5 mils minimum) or galvanized in accordance with ASTM A123. Anchors need not be protected from overspray.

Longitudinal reinforcing steel shall be cut/bent so that ends shall be 1" from the vertical leg of the steel armor at the expansion joint system.

Concrete shall be forced under and around steel armor and anchors. Proper consolidation of the concrete shall be achieved by localized internal vibration.

② The installation temperature shall be taken as the actual air temperature averaged over the 24-hour period immediately preceding installation.

③ MoDOT Construction personnel will indicate the strip seal expansion joint system installed.

Steel armor may also be referred to as extrusion or rail.

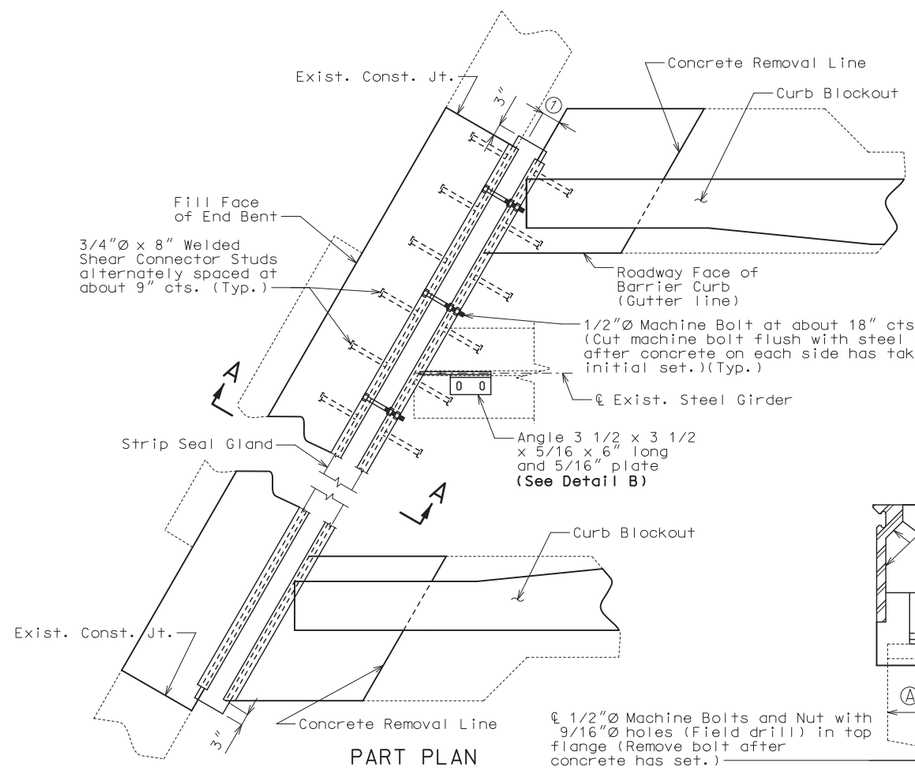

PART PLAN

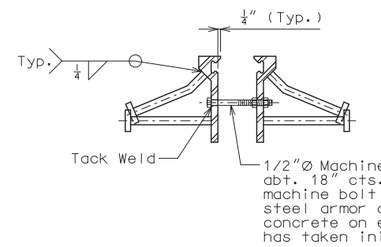

DETAIL A

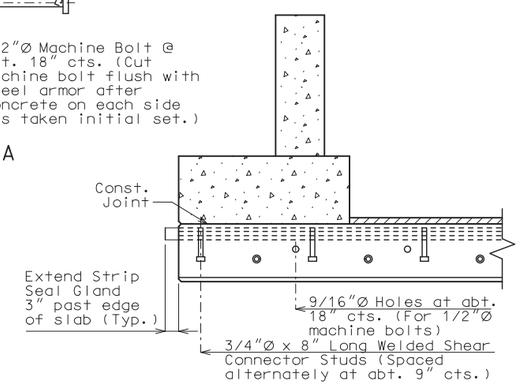

PART SECTION B-B

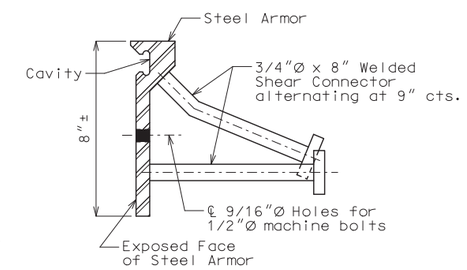

DETAIL OF JOINT ARMOR

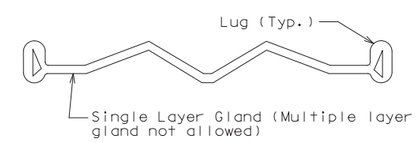

DETAIL OF GLAND

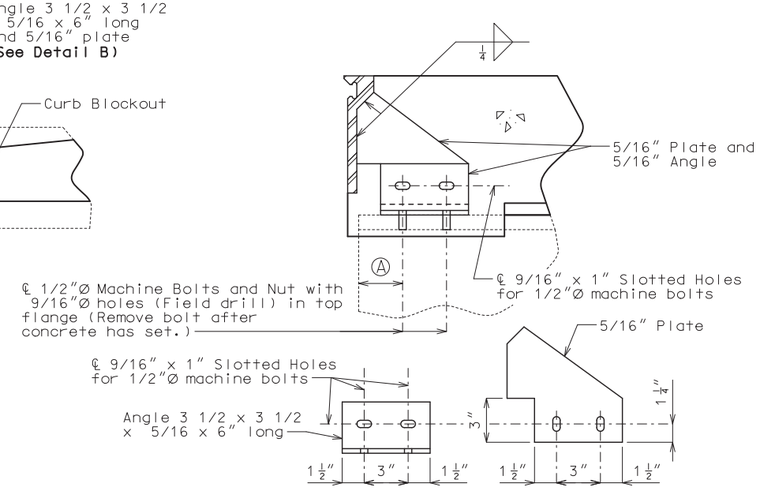

DETAIL B

Table of Allowed Transverse Strip Seal Expansion Joint System

Manufacturer	Strip Seal System (Designated Name)	Movement Parallel to RDWY	① Allowed Installation Gap Normal to Joint at RDWY Surface @ Air/Surface Temperature ②						③
			@ 40°F	@ 50°F	@ 60°F	@ 70°F	@ 80°F	@ 90°F	
D S Brown	Strip seal L2-400	1 13/16"	2 3/16"	2 1/8"	2"	1 7/8"	1 13/16"	1 11/16"	□
D S Brown	Strip seal L2-500	1 13/16"	2 3/16"	2 1/8"	2"	1 7/8"	1 13/16"	1 11/16"	□
Watson Bowman Acme (Wabo)	Strip seal SE-300	1 13/16"	2 3/16"	2 1/8"	2"	1 7/8"	1 13/16"	1 11/16"	□
Watson Bowman Acme (Wabo)	Strip seal SE-400	1 13/16"	2 3/16"	2 1/8"	2"	1 7/8"	1 13/16"	1 11/16"	□

DETAILS OF STRIP SEAL EXPANSION JOINT SYSTEM AT END BENTS NO. 1 & 5

Detailed Apr. 2020
Checked May 2020

Note: This drawing is not to scale. Follow dimensions.

STATE OF MISSOURI
DAVID JAMES HAGEMEYER
NUMBER PE-2007002788
PROFESSIONAL ENGINEER
THIS SHEET HAS BEEN SIGNED, SEALED AND DATED ELECTRONICALLY.

DATE PREPARED	
5/26/2020	
ROUTE I-55	STATE MO
DISTRICT BR	SHEET NO. 2
COUNTY SCOTT	
JOB NO. J9I3545	
CONTRACT ID.	
PROJECT NO.	
BRIDGE NO. A90132	

DATE	DESCRIPTION

IF A SEAL IS PRESENT ON THIS SHEET IT HAS BEEN ELECTRONICALLY SEALED AND DATED.

MISSOURI HIGHWAYS AND TRANSPORTATION COMMISSION
105 WEST CAPITOL
JEFFERSON CITY, MO 65102
1-888-ASK-MODOT (1-888-275-6636)

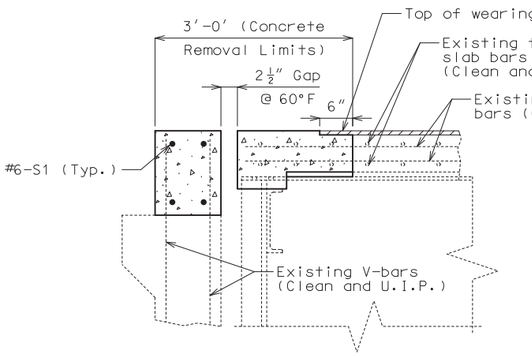

PART SECTION A-A

(Normal to ℄ Bent)

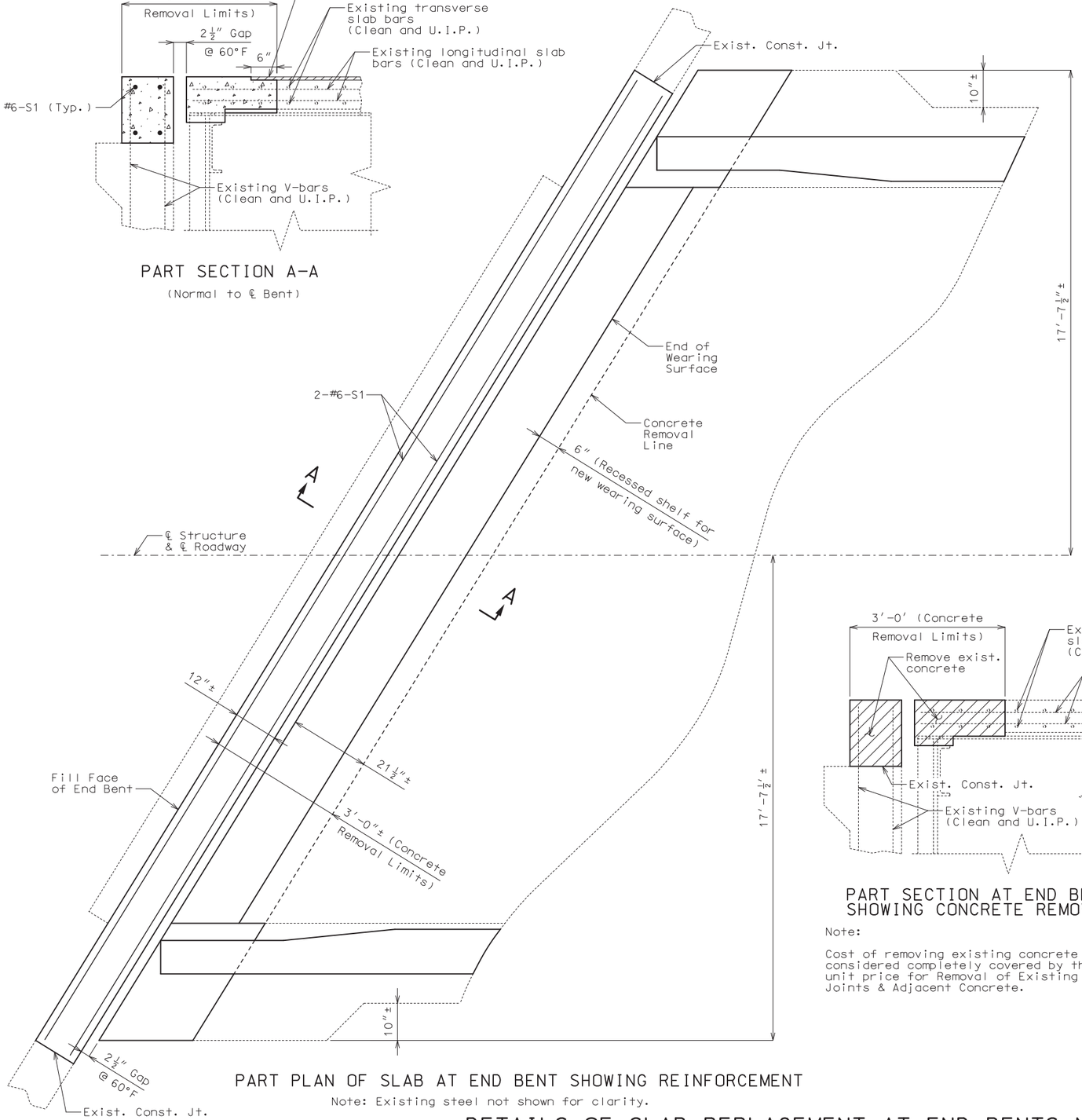

PART PLAN OF SLAB AT END BENT SHOWING REINFORCEMENT

Note: Existing steel not shown for clarity.

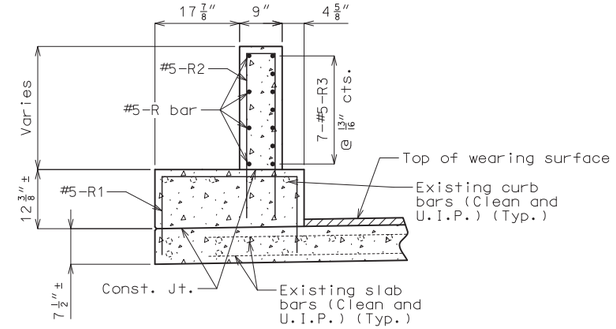

PART SECTION B-B

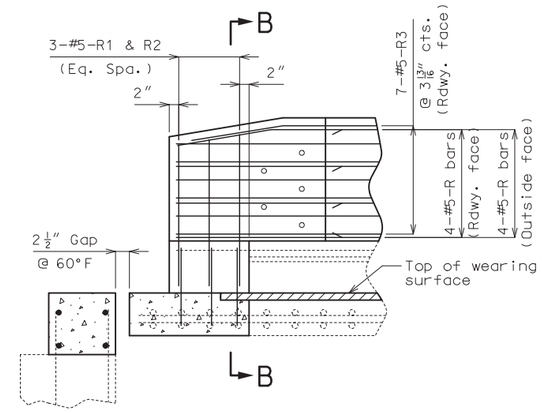

PART ELEVATION OF CURB BLOCKOUT AND CURB

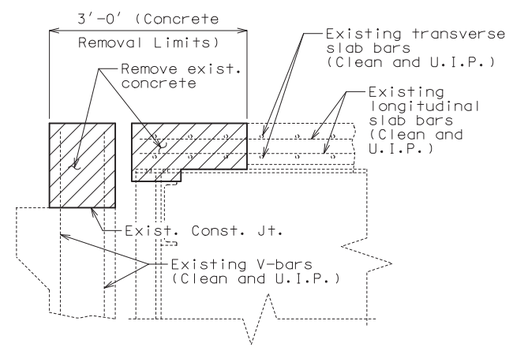

PART SECTION AT END BENT SHOWING CONCRETE REMOVAL

Note:

Cost of removing existing concrete will be considered completely covered by the contract unit price for Removal of Existing Expansion Joints & Adjacent Concrete.

Notes:

The #6-S1 bars to be segmented to accommodate stage construction. The total bar length for #6-S1 bars shown in Bill of Reinforcing Steel allows for one lap splice with a length of 3'-10". Actual bar segment lengths to be determined by contractor. The contractor may use a mechanical bar splice in lieu of a lap splice. When a mechanical bar splice is used, the actual bar segment length will be determined by the contractor to accommodate manufacturer's recommendations for installation and stage construction. The cost of furnishing and installing the bar splices will be considered completely covered by the contract unit price for Reinforcing Steel (Epoxy Coated). No adjustment of the quantity of reinforcing steel will be allowed for the use of mechanical bar splices.

Top of curb blockout and curb shall be built parallel to grade with curb joints normal to grade.

All exposed edges of curb blockout and curb shall have either a 1/2-inch radius or a 3/8-inch bevel, unless otherwise noted.

Concrete in the curb blockout and curb shall be Class B-1.

Slab concrete shall be Class B-2.

Payment for removal and replacement of all concrete and reinforcement in curb in the limits shown, complete in place, will be considered completely covered by the contract unit price for Remove and Replace Curb.

Existing reinforcement not embedded in left-in-place concrete shall be removed, cleaned and reused or replaced with in-kind new epoxy coated reinforcement.

Top of backwall for End Bents No. 1 & 5 shall be formed to the crown and grade of the roadway. Backwall above upper construction joint shall not be poured until the superstructure slab has been poured in the adjacent span.

For Details of Strip Seal, see Sheet No. 2.

For Details of Curb Blockout, see Sheets No. 4 thru 6.

DETAILS OF SLAB REPLACEMENT AT END BENTS NO. 1 & 5

(End Bent No. 1 shown, End Bent No. 5 similar)

Detailed Apr. 2020
Checked May 2020

Note: This drawing is not to scale. Follow dimensions.

STATE OF MISSOURI
DAVID JAMES HAGEMEYER
NUMBER PE-2007002788
PROFESSIONAL ENGINEER

THIS SHEET HAS BEEN SIGNED, SEALED AND DATED ELECTRONICALLY.

DATE PREPARED	5/26/2020
ROUTE	I-55
STATE	MO
DISTRICT	BR
SHEET NO.	3
COUNTY	SCOTT
JOB NO.	J9I3545
CONTRACT ID.	
PROJECT NO.	
BRIDGE NO.	A09132

DESCRIPTION

DATE

MISSOURI HIGHWAYS AND TRANSPORTATION COMMISSION

105 WEST CAPITOL
JEFFERSON CITY, MO 65102
1-888-ASK-MODOT (1-888-275-6636)

IF A SEAL IS PRESENT ON THIS SHEET IT HAS BEEN ELECTRONICALLY SEALED AND DATED.

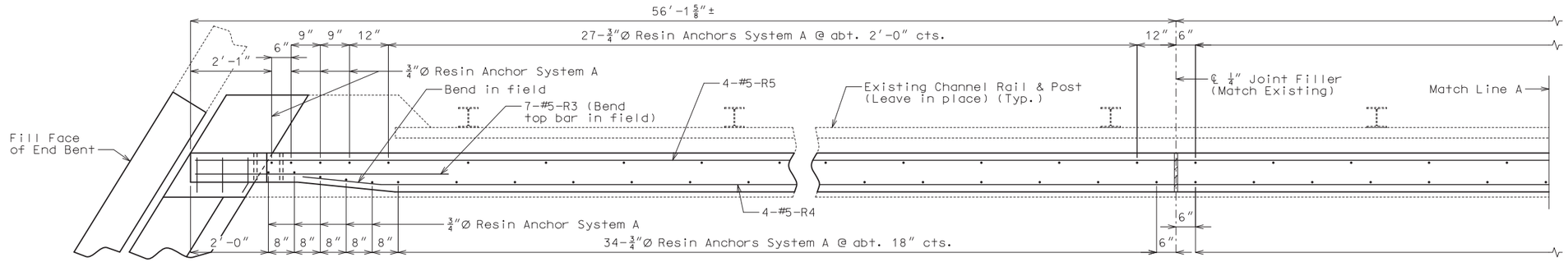

SPAN (1-2)

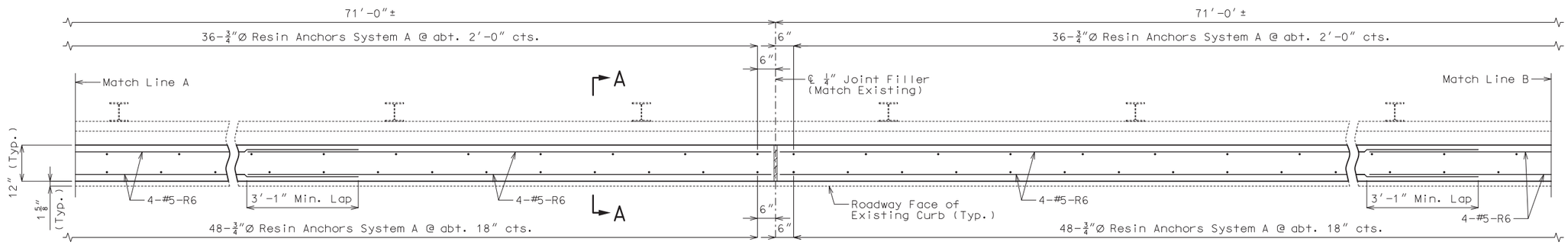

SPAN (2-3) SPAN (3-4)

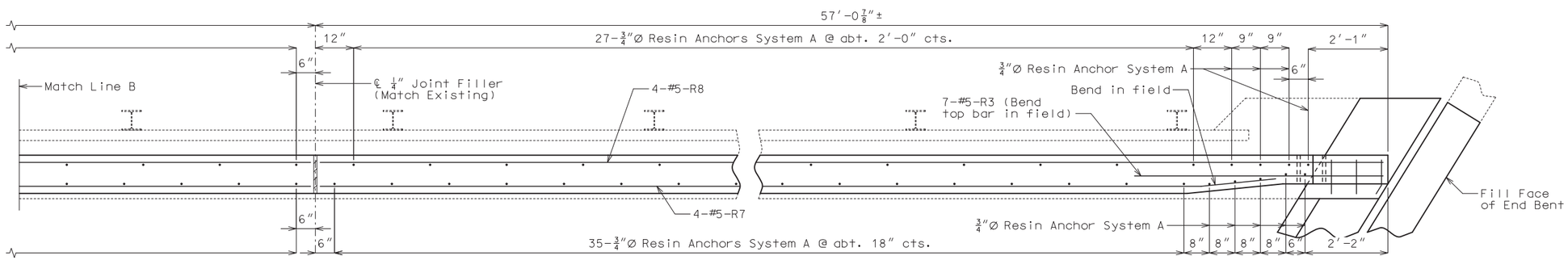

SPAN (4-5)

Notes:

Longitudinal dimensions are along grade and are taken at top outside edge of curb.

Top of curb blockout shall be built parallel to grade with curb blockout joints (except at end bents) normal to grade.

Concrete in the curb blockout shall be Class B-1.

All exposed edges of curb blockout shall have either a 1/2-inch radius or a 3/8-inch bevel, unless otherwise noted.

Payment for concrete, reinforcement, resin anchor systems and any other work incidental to the curb blockout, complete in place, will be considered completely covered by the contract unit price for Curb Blockout per linear foot.

Measurement of curb blockout is to the nearest linear foot for each structure, measured along the inside edge of curb from end of slab to end of slab.

Concrete traffic barrier delineators shall be placed on top of the curb blockout similarly as shown on Missouri Standard Plan 617.10 and in accordance with Sec 617. Delineators on bridges with two-lane, two-way traffic shall have retroreflective sheeting on both sides. Concrete traffic barrier delineators will be considered completely covered by the contract unit price for Curb Blockout.

PLAN OF LEFT CURB BLOCKOUT

(Right curb blockout similar by 180° rotation)
(New wearing surface not shown)

Cost of any concrete curb repair will be considered completely covered by the contract unit price for Curb Blockout.

The 1/4-inch joints may be either formed joints with joint filler or saw-cut joints.

Joint sealant and backer rods shall be in accordance with Sec 717 for Silicone Joint Sealant for Saw Cut and Formed Joints.

For additional details of end of blockout, see Sheet No. 5.

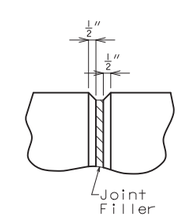

FILLED JOINT DETAIL

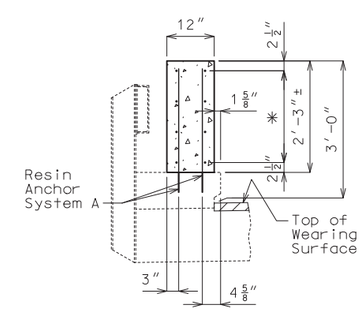

SECTION A-A

✳ 4-#5-R bars (Each face) (Equally spaced)

CURB BLOCKOUT

Detailed Apr. 2020
Checked May 2020

Note: This drawing is not to scale. Follow dimensions.

STATE OF MISSOURI
DAVID JAMES HAGEMEYER
NUMBER PE-2007002788
PROFESSIONAL ENGINEER
THIS SHEET HAS BEEN SIGNED, SEALED AND DATED ELECTRONICALLY.

DATE PREPARED	5/26/2020
ROUTE	I-55
STATE	MO
DISTRICT	BR
SHEET NO.	4
COUNTY	SCOTT
JOB NO.	J9I3545
CONTRACT ID.	
PROJECT NO.	
BRIDGE NO.	A09132

DESCRIPTION | DATE

MISSOURI HIGHWAYS AND TRANSPORTATION COMMISSION
105 WEST CAPITOL
JEFFERSON CITY, MO 65102
1-888-ASK-MODOT (1-888-275-6636)

IF A SEAL IS PRESENT ON THIS SHEET IT HAS BEEN ELECTRONICALLY SEALED AND DATED.

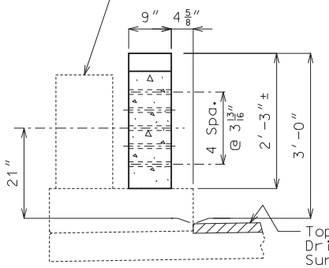

PART SECTION THRU END OF BLOCKOUT

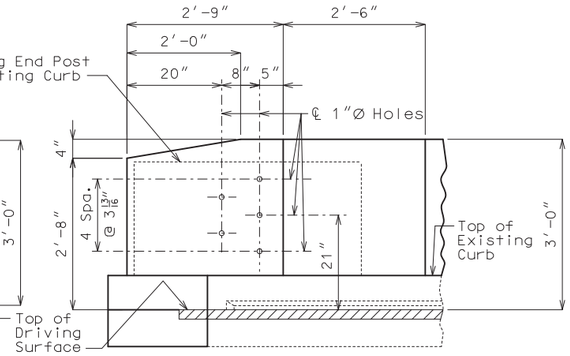

PART ELEVATION SHOWING END OF BLOCKOUT

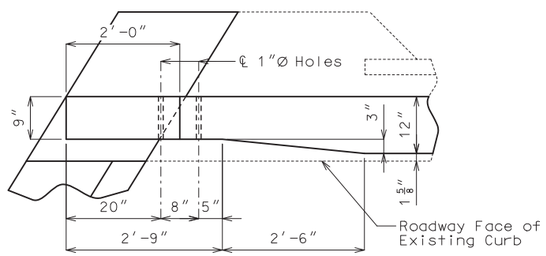

PART PLAN SHOWING END OF BLOCKOUT

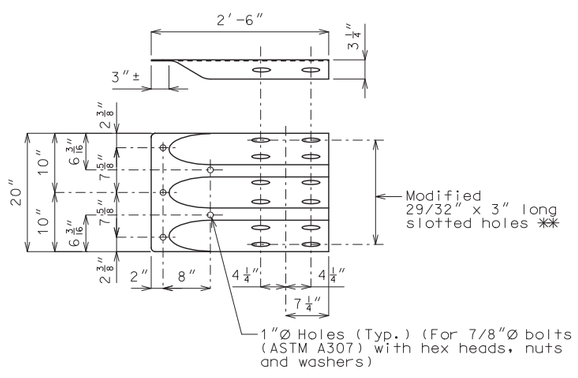

** Tighten bolts, back off 1/2 turn and burr threads Allow for sliding between Modified Bridge Anchor Section (Thrie Beam) and End Post.

MODIFIED TERMINAL CONNECTION AT ABUTMENTS (ROADWAY ITEM)

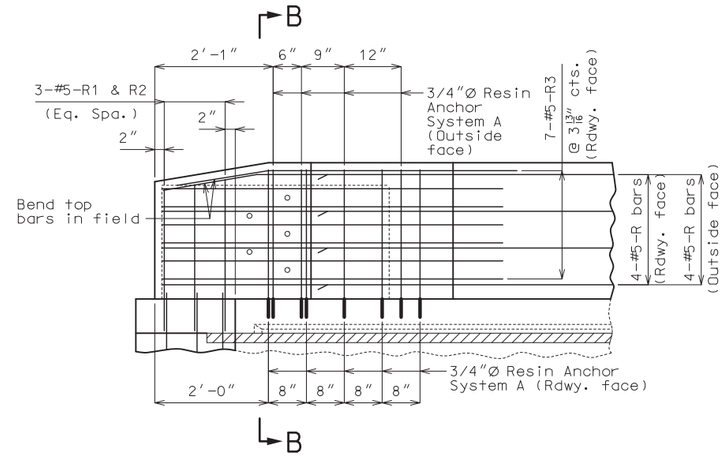

PART ELEVATION OF END OF BLOCKOUT AT END BENT NO. 1 SHOWING REINFORCEMENT

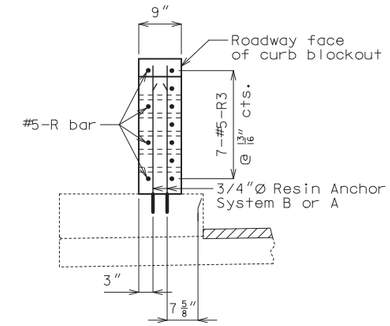

ELEVATION B-B

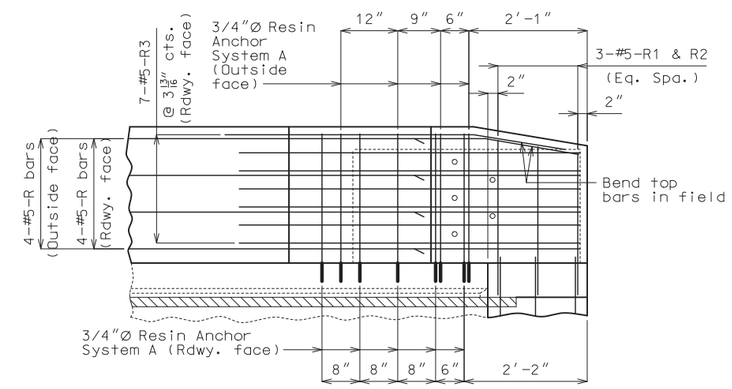

PART ELEVATION OF END OF BLOCKOUT AT END BENT NO. 5 SHOWING REINFORCEMENT

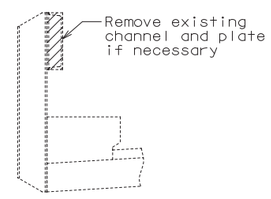

TYPICAL SECTION THRU RAILING SHOWING CHANNEL REMOVAL

Cost of channel removal will be considered completely covered by the contract unit price for Curb Blockout.

Notes:

Work this sheet with Sheets No. 4 & 6.

All curb blockout reinforcement shall be epoxy coated.

For details of resin anchor system, see Sheet No. 1.

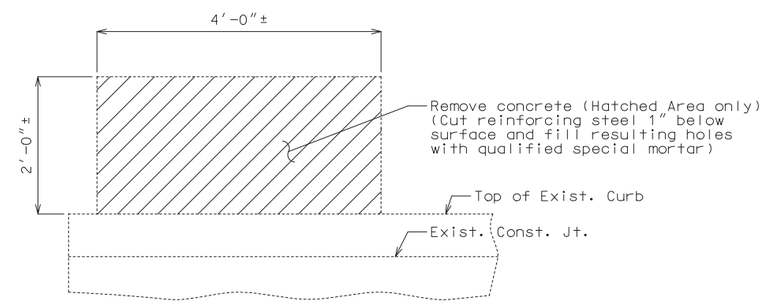

PART ELEVATION SHOWING END POSTS CONCRETE REMOVAL

(Slab and curb concrete removal not shown for clarity)
(End Bent No. 1 shown, End Bent No. 5 Similar)

Note:

Cost of removing existing end posts will be considered completely covered by the contract unit price for Curb Blockout.

LEFT CURB BLOCKOUT AT END BENTS

(Right curb blockout similar by 180° rotation)

Note: This drawing is not to scale. Follow dimensions.

Detailed Apr. 2020
Checked May 2020

STATE OF MISSOURI
DAVID JAMES HAGEMEYER
NUMBER PE-2007002788
PROFESSIONAL ENGINEER
THIS SHEET HAS BEEN SIGNED, SEALED AND DATED ELECTRONICALLY.

DATE PREPARED	
5/26/2020	
ROUTE I-55	STATE MO
DISTRICT BR	SHEET NO. 5
COUNTY SCOTT	
JOB NO. J9I3545	
CONTRACT ID.	
PROJECT NO.	
BRIDGE NO. A09132	

DESCRIPTION

DATE

MISSOURI HIGHWAYS AND TRANSPORTATION COMMISSION
105 WEST CAPITOL
JEFFERSON CITY, MO 65102
1-888-ASK-MODOT (1-888-275-6636)

IF A SEAL IS PRESENT ON THIS SHEET IT HAS BEEN ELECTRONICALLY SEALED AND DATED.

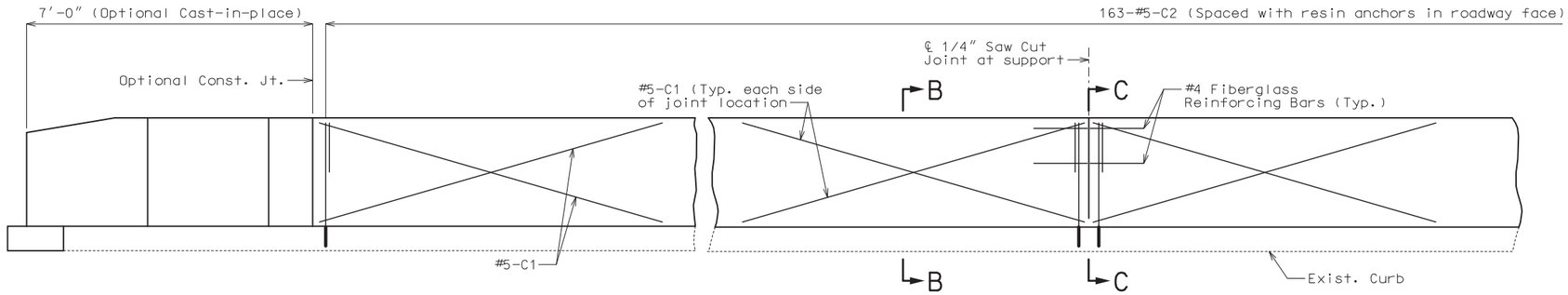

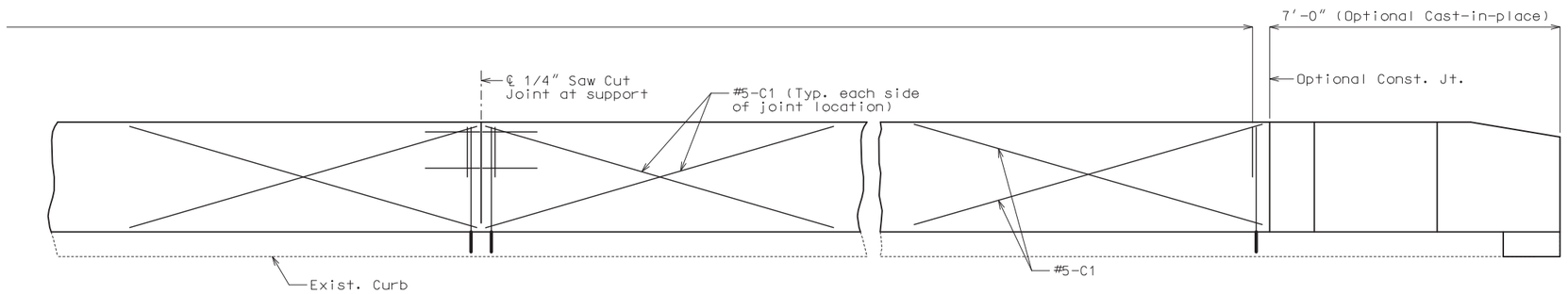

TYPICAL ELEVATION OF CURB BLOCKOUT AT SUPPORT LOCATIONS

Horizontal R bars and rail attachment holes not shown for clarity. C bars and textured fiberglass bars shall be used in addition to reinforcement shown for conventional forming.

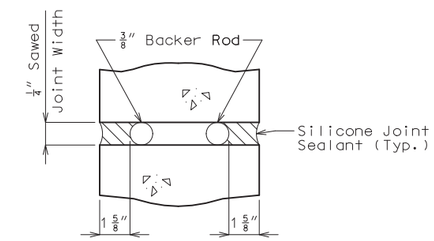

SECTION A-A

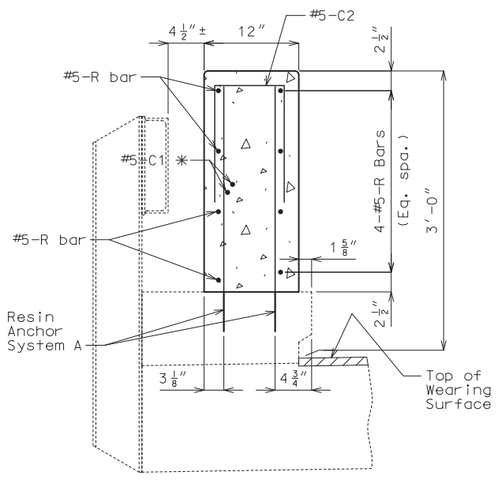

SECTION B-B

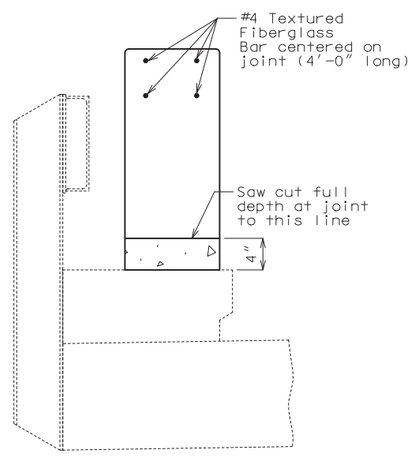

SECTION C-C

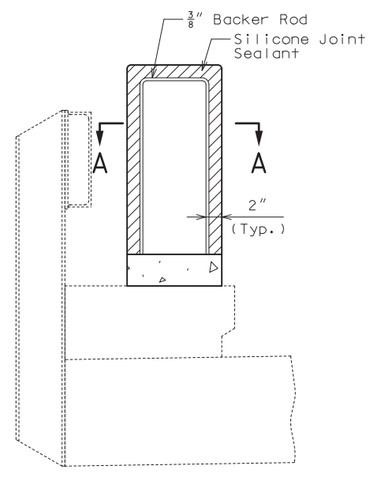

SECTION THRU SAW CUT JOINT

Notes:

Work this sheet with Sheets No. 4 & 5.

Joint sealant and backer rods shall be in accordance with Sec 717 for silicone joint sealant for saw cut and formed joints.

For slip-formed option, both sides of the curb blockout shall have a vertically broomed finish and the top shall have a transversely broomed finish.

Cost of silicone joint sealant and backer rod, complete in place, will be considered completely covered by the contract unit price for Curb Blockout.

General notes shown for conventionally formed curb blockouts also apply to slip-formed curb blockouts.

Channel, posts and concrete end posts shall be removed if necessary for slip forming. Removal cost will be considered completely covered by the contract unit price for Curb Blockout.

✳ Each side of joint location.

Note: C2 bars spaced with resin anchor systems in roadway face of 12" wide curb blockout.

OPTIONAL SLIP-FORMED CURB BLOCKOUT

Detailed Apr. 2020
Checked May 2020

Note: This drawing is not to scale. Follow dimensions.

STATE OF MISSOURI
DAVID JAMES HAGEMEYER
NUMBER PE-2007002788
PROFESSIONAL ENGINEER

THIS SHEET HAS BEEN SIGNED, SEALED AND DATED ELECTRONICALLY.

DATE PREPARED	5/26/2020
ROUTE	I-55
STATE	MO
DISTRICT	BR
SHEET NO.	6
COUNTY	SCOTT
JOB NO.	J9I3545
CONTRACT ID.	
PROJECT NO.	
BRIDGE NO.	A09132

DESCRIPTION

DATE

MISSOURI HIGHWAYS AND TRANSPORTATION COMMISSION
105 WEST CAPITOL
JEFFERSON CITY, MO 65102
1-888-ASK-MODOT (1-888-275-6636)

IF A SEAL IS PRESENT ON THIS SHEET IT HAS BEEN ELECTRONICALLY SEALED AND DATED.

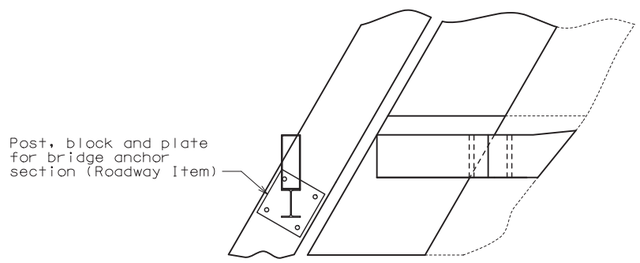

PART PLAN OF CURB BLOCKOUT
AT END BENT SHOWING
POST AND PLATE INSTALLATION

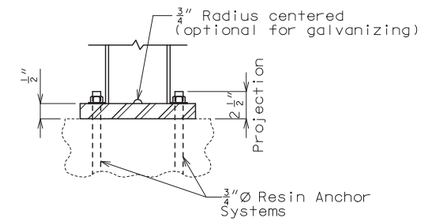

PART ELEVATION OF POST

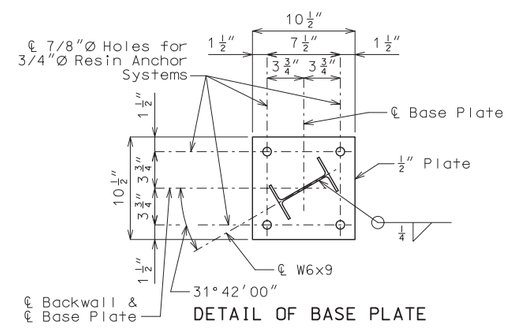

POST AND PLATE DETAIL
(ROADWAY ITEM)

(4 Required)

Resin Anchor Notes:

The contractor shall use one of the qualified resin anchor systems in accordance with Sec 1039.

The minimum embedment depth in concrete with f'c = 4,000 psi for the resin anchor system shall be that required to meet the minimum ultimate pullout strength in accordance with Sec 1039 but shall not be less than 5".

Cost of furnishing and installing the resin anchor system, complete in place, will be considered completely covered by other item.

Detailed Apr. 2020
Checked May 2020

Note: This drawing is not to scale. Follow dimensions.

STATE OF MISSOURI
DAVID JAMES HAGEMEYER
NUMBER PE-2007002788
PROFESSIONAL ENGINEER

THIS SHEET HAS BEEN SIGNED, SEALED AND DATED ELECTRONICALLY.

DATE PREPARED	
5/26/2020	
ROUTE	STATE
I-55	MO
DISTRICT	SHEET NO.
BR	7
COUNTY	
SCOTT	
JOB NO.	
J9I3545	
CONTRACT ID.	
PROJECT NO.	
BRIDGE NO.	
A09132	

DATE	DESCRIPTION

MISSOURI HIGHWAYS AND TRANSPORTATION COMMISSION
105 WEST CAPITOL
JEFFERSON CITY, MO 65102
1-888-ASK-MODOT (1-888-275-6636)

IF A SEAL IS PRESENT ON THIS SHEET IT HAS BEEN ELECTRONICALLY SEALED AND DATED.

BILL OF REINFORCING STEEL

NO. REQ'D.	MARK NO. SIZE	MARK NO. MARK	LOCATION	EPOXY (E)	SHAPE NO.	STIRRUP (S)	SUBSTR. (X)	VARIES (V)	NO. EACH	B FT. IN.	C FT. IN.	D FT. IN.	E FT. IN.	F FT. IN.	H FT. IN.	K FT. IN.	NOMINAL LENGTH FT. IN.	ACTUAL LENGTH FT. IN.	WEIGHT LBS.
			SLAB																
8	6	S1	SLAB	E	20					45 0.000							45 0	45 0	541
			CURB																
			BLOCKOUT																
12	5	R1	BLOCKOUT	E	10	S					16.375	2 9.500					5 6	5 4	67
12	6	R2	BLOCKOUT	E	10	S					2 11.500	6.000					6 5	6 1	110
28	5	R3	BLOCKOUT	E	20					6 6.000							6 6	6 6	190
8	5	R4	BLOCKOUT	E	20					53 2.000							53 2	53 2	444
8	5	R5	BLOCKOUT	E	20					55 10.000							55 10	55 10	466
64	5	R6	BLOCKOUT	E	20					36 11.000							36 11	36 11	2464
8	5	R7	BLOCKOUT	E	20					54 1.000							54 1	54 1	451
8	5	R8	BLOCKOUT	E	20					56 9.000							56 9	56 9	474
			SLIP FORM																
32	5	C1	SLIP FORM	E	20					10 0.000							10 0	10 0	334
330	5	C2	SLIP FORM	E	10	S					15.000	9.000					3 3	3 1	1061
			TOTALS																
	5			E															5951
	6			E															651
			TOTAL																0
			TOTAL	E															6602
			Slab on Girder																
	5			E															4556
	6			E															651
			TOTAL																5207
			Slip Form Option																
	5			E															1395
			TOTAL																1395

BILL OF REINFORCING STEEL

NO. REQ'D.	MARK NO. SIZE	MARK NO. MARK	LOCATION	EPOXY (E)	SHAPE NO.	STIRRUP (S)	SUBSTR. (X)	VARIES (V)	NO. EACH	B FT. IN.	C FT. IN.	D FT. IN.	E FT. IN.	F FT. IN.	H FT. IN.	K FT. IN.	NOMINAL LENGTH FT. IN.	ACTUAL LENGTH FT. IN.	WEIGHT LBS.

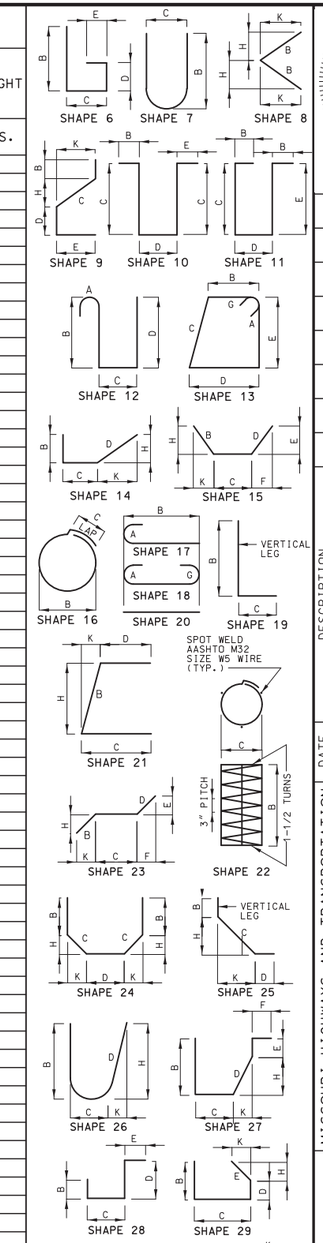

BENDING DIAGRAMS

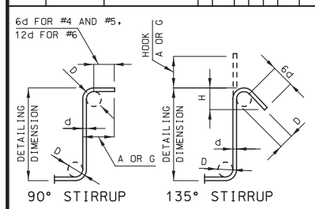

STIRRUP HOOK DIMENSIONS				
GRADES 40 - 50 - 60 KSI				
BAR SIZE	D (IN.)	90° HOOK	135° HOOK	
		HOOK A OR G	HOOK A OR G	APPROX. H
#4	2"	4 1/2"	4 1/2"	3"
#5	2 1/2"	6"	5 1/2"	3 3/4"
#6	4 1/2"	12"	8"	4 1/2"

NOTE: UNLESS OTHERWISE NOTED, DIAMETER "D" IS THE SAME FOR ALL BENDS AND HOOKS ON A BAR.

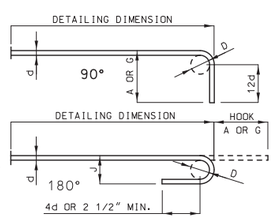

END HOOK DIMENSIONS				
BAR SIZE	D (IN.)	ALL GRADES		
		180° HOOKS		90° HOOKS
		A OR G	J	A OR G
#3	2 1/4"	5"	3"	6"
#4	3"	6"	4"	8"
#5	3 3/4"	7"	5"	10"
#6	4 1/2"	8"	6"	12"
#7	5 1/4"	10"	7"	14"
#8	6"	11"	8"	16"
#9	9 1/2"	15"	11 3/4"	19"
#10	10 3/4"	17"	13 1/4"	22"
#11	12"	19"	14 3/4"	2'-0"
#14	18 1/4"	2'-3"	21 3/4"	2'-7"

NOTE:
ALL STANDARD HOOKS AND BENDS OTHER THAN 180 DEGREE ARE TO BE BENT WITH SAME PROCEDURE AS FOR 90 DEGREE STANDARD HOOKS.

HOOKS AND BENDS SHALL BE IN ACCORDANCE WITH THE PROCEDURES AS SHOWN ON THIS SHEET.

E = EPOXY COATED REINFORCEMENT.
S = STIRRUP.
X = BAR IS INCLUDED IN SUBSTRUCTURE QUANTITIES.
V = BAR DIMENSIONS VARY IN EQUAL INCREMENTS BETWEEN DIMENSIONS SHOWN ON THIS LINE AND THE FOLLOWING LINE.
NO. EA. = NUMBER OF BARS OF EACH LENGTH.

NOMINAL LENGTHS ARE BASED ON OUT TO OUT DIMENSIONS SHOWN IN BENDING DIAGRAMS AND ARE LISTED FOR FABRICATORS USE. (NEAREST INCH)

ACTUAL LENGTHS ARE MEASURED ALONG CENTERLINE BAR TO THE NEAREST INCH.

PAYWEIGHTS ARE BASED ON ACTUAL LENGTHS.

FOUR ANGLE OR CHANNEL SPACERS ARE REQUIRED FOR EACH COLUMN SPIRAL. SPACERS ARE TO BE PLACED ON INSIDE OF SPIRALS. LENGTH AND WEIGHT OF COLUMN SPIRALS DO NOT INCLUDE SPLICES OR SPACERS.

REINFORCING STEEL (GRADE 60) FY = 60,000 PSI.

STATE OF MISSOURI
DAVID JAMES HAGEMEYER
NUMBER PE-2007002788
PROFESSIONAL ENGINEER
THIS SHEET HAS BEEN SIGNED, SEALED AND DATED ELECTRONICALLY.

DATE PREPARED 5/26/2020
ROUTE I-55 | STATE MO
DISTRICT BR | SHEET NO. 8
COUNTY SCOTT
JOB NO. J9I3545
CONTRACT ID.
PROJECT NO.
BRIDGE NO. A09132

DESCRIPTION
DATE

MISSOURI HIGHWAYS AND TRANSPORTATION COMMISSION
105 WEST CAPITOL
JEFFERSON CITY, MO 65102
1-888-ASK-MODOT (1-888-275-6636)

IF A SEAL IS PRESENT ON THIS SHEET IT HAS BEEN ELECTRONICALLY SEALED AND DATED.

Detailed Apr. 2020
Checked May 2020

Note: This drawing is not to scale. Follow dimensions.