MISSOURI HIGHWAYS AND TRANSPORTATION COMMISSION
PLANS FOR PROPOSED
STATE HIGHWAY

JASPER COUNTY

MULTIPLE BRIDGE REHABILITATION
1/4" METHYLMETHACRYLATE (MMA) SLURRY POLYMER CONCRETE OVERLAY

DESIGN DESIGNATION

MO 249
A.A.D.T. - 2020 = 20.144
T = 18.12%
V = 70 M.P.H.
FUNCTIONAL CLASSIFICATION - FREEWAY

RTE FF - OVER I-49
A.A.D.T. - 2020 = 7.837
T = 12.19%
V = 50 M.P.H.
FUNCTIONAL CLASSIFICATION - PRINCIPAL ARTERIAL

ROUTE FF - OVER I-44
A.A.D.T. - 2020 = 13.325
T = 8.39%
V = 50 M.P.H.
FUNCTIONAL CLASSIFICATION - PRINCIPAL ARTERIAL

NO NEW R/W REQUIRED

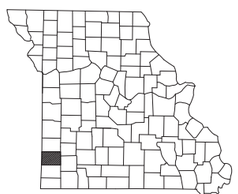

KEY MAP
SHOWING LOCATION
OF JASPER COUNTY

CONVENTIONAL SYMBOLS
(USED IN PLANS)

	EXISTING	NEW
BUILDINGS AND STRUCTURES		
GUARD RAIL		
GUARD CABLE		
CONCRETE RIGHT-OF-WAY MARKER		
STEEL RIGHT-OF-WAY MARKER		
LOCATION SURVEY MARKER		
UTILITIES		
FIBER OPTICS	—FO—	—FO—
OVERHEAD CABLE TV	—OTV—	—OTV—
UNDERGROUND CABLE TV	—UTV—	—UTV—
OVERHEAD TELEPHONE	—OT—	—OT—
UNDERGROUND TELEPHONE	—UT—	—UT—
OVERHEAD POWER	—OE—	—OE—
UNDERGROUND POWER	—UE—	—UE—
SANITARY SEWER	—S—	—S—
STORM SEWER	—SS—	—SS—
GAS	—G—	—G—
WATER	—W—	—W—
MANHOLE	SAN	
FIRE HYDRANT	HYD	
WATER VALVE	WV	
WATER METER	WM	
DROP INLET	DI	
DITCH BLOCK		
GROUND MOUNTED SIGN	SIGN	
LIGHT POLE		
H-FRAME POWER POLE		
TELEPHONE PEDESTAL	PED	
FENCE		
CHAIN LINK	—V—	
WOVEN WIRE	—X—	
GATE POST		
BENCHMARK	BM	

NOTE: DASHED OR OPEN SYMBOLS INDICATE EXISTING FEATURES

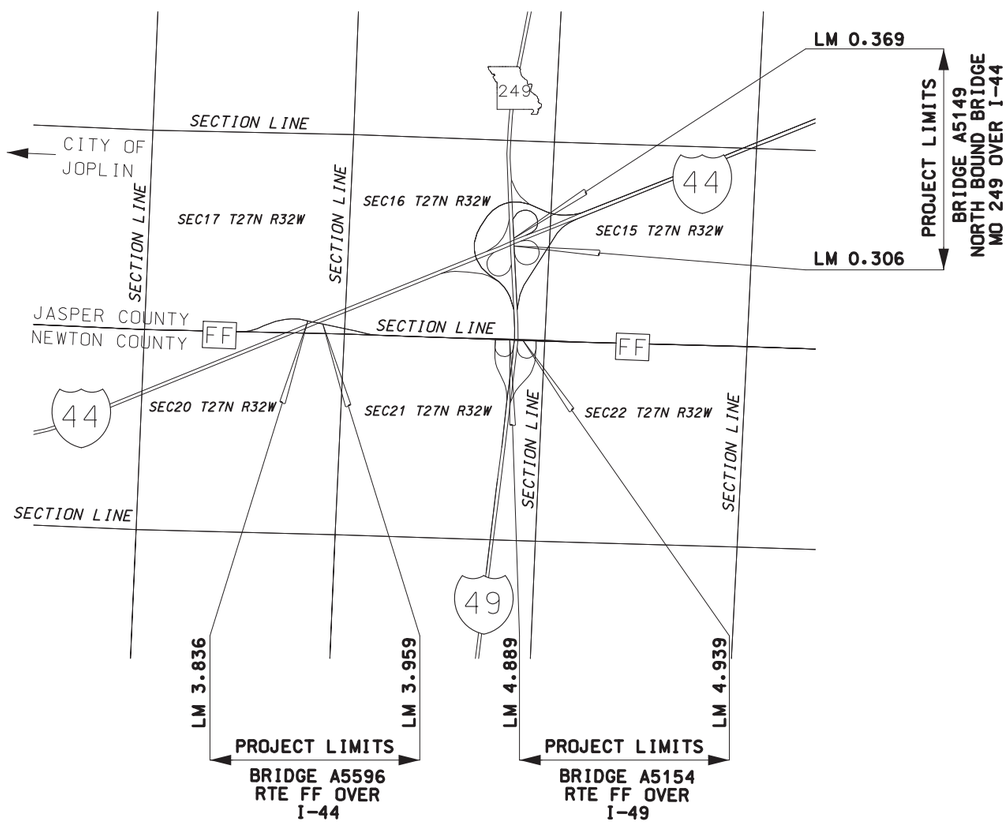

THE EXISTENCE AND APPROXIMATE LOCATION OF UTILITY FACILITIES KNOWN TO EXIST, AS SHOWN ON THE PLANS, ARE BASED ON THE BEST INFORMATION AVAILABLE TO THE COMMISSION AT THIS TIME. THIS INFORMATION IS PROVIDED BY THE COMMISSION "AS-IS" AND THE COMMISSION EXPRESSLY DISCLAIMS ANY REPRESENTATION OR WARRANTY AS TO THE COMPLETENESS, ACCURACY, OR SUITABILITY OF THE INFORMATION FOR ANY USE. RELIANCE UPON THIS INFORMATION IS DONE AT THE RISK AND PERIL OF THE USER, AND THE COMMISSION SHALL NOT BE LIABLE FOR ANY DAMAGES THAT MAY ARISE FROM ANY ERROR IN THE INFORMATION.

NOT TO SCALE

INDEX OF SHEETS

DESCRIPTION	SHEET NUMBER
TITLE SHEET	1
TYPICAL SECTIONS (TS) (1 SHEET)	2
QUANTITIES (QU) (2 SHEETS)	3
PLAN/PROFILE SHEETS (PP)	4-6
TRAFFIC CONTROL SHEETS (TC)	7-13
EROSION CONTROL SHEETS (EC)	-
LIGHTING (LT)	-
SIGNALS (SG)	-
SIGNING (SN)	-
PAVEMENT MARKING (PM)	-
CULVERT SECTIONS (CS)	-
BRIDGE DRAWINGS (B)	
BRIDGE A51491	1
BRIDGE A51542	1
BRIDGE A55961	1

LENGTH OF PROJECT

BEGINNING OF PROJECT

BRIDGE A5596	LM	3.836 - 3.959
BRIDGE A5154	LM	4.889 - 4.939
BRIDGE A5149	LM	0.306 - 0.369

END OF PROJECT

APPARENT LENGTH	0.236	MILE
	1246.1	FEET
EQUATIONS AND EXCEPTIONS:	-	
TOTAL CORRECTIONS	0.0	FEET
NET LENGTH OF PROJECT	1246.1	FEET
STATE LENGTH	0.236	MILES

STATE OF MISSOURI
CRAIG ALAN SWITZER
NUMBER
PE-2003015045
PROFESSIONAL ENGINEER

THIS SHEET HAS BEEN SIGNED, SEALED AND DATED ELECTRONICALLY.

DATE PREPARED
8/25/2020

ROUTE	STATE
FF	MO
DISTRICT	SHEET NO.
SW	1

COUNTY
JASPER

JOB NO.
J7P3107C

CONTRACT ID.

PROJECT NO.

BRIDGE NO.

DATE	DESCRIPTION

IF A SEAL IS PRESENT ON THIS SHEET IT HAS BEEN ELECTRONICALLY SEALED AND DATED.

MISSOURI HIGHWAYS AND TRANSPORTATION COMMISSION
105 WEST CAPITOL
JEFFERSON CITY, MO 65102
1-888-ASK-MODOT (1-888-275-6636)

▲ REPLACE GUARDRAIL ONLY AT BRIDGES #A5154 AND #A5149.

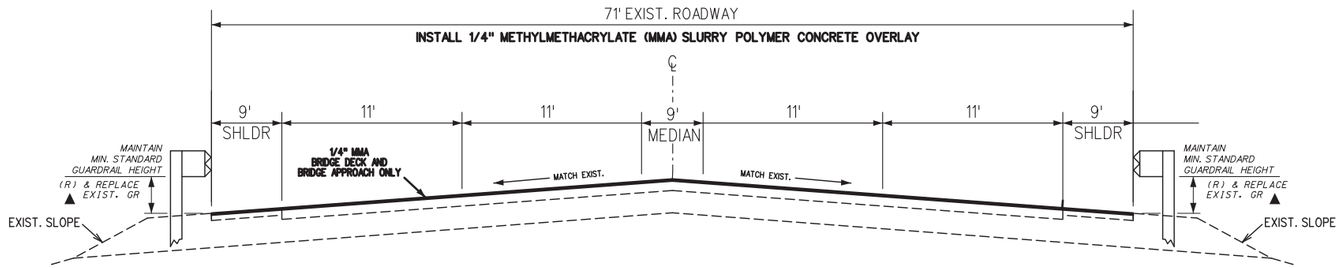

ROUTE FF

BRIDGE #A5596 (OVER I-44)

LM 3.836 - LM 3.959

BRIDGE #A5154 (OVER I-49)

LM 4.889 - LM 4.939

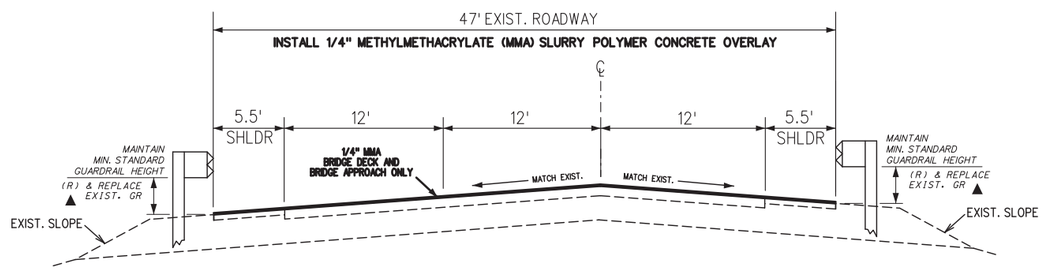

MO 249

NORTHBOUND BRIDGE #A5149 (OVER I-44)

LM 0.306 - LM 0.369

NOT TO SCALE

TYPICAL SECTION
SHEET 1 OF 1

STATE OF MISSOURI
CRAIG ALAN SWITZER
NUMBER PE-2003015045
PROFESSIONAL ENGINEER

THIS SHEET HAS BEEN SIGNED, SEALED AND DATED ELECTRONICALLY.

DATE PREPARED	
7/31/2020	
ROUTE: FF	STATE: MO
DISTRICT: SW	SHEET NO.: 2
COUNTY: JASPER	
JOB NO.: J7P3107C	
CONTRACT ID.	
PROJECT NO.	
BRIDGE NO.	

DATE	DESCRIPTION

MISSOURI HIGHWAYS AND TRANSPORTATION COMMISSION
105 WEST CAPITOL
JEFFERSON CITY, MO 65102
1-888-ASK-MODOT (1-888-275-6636)

IF A SEAL IS PRESENT ON THIS SHEET IT HAS BEEN ELECTRONICALLY SEALED AND DATED.

REV.

REMOVAL OF IMPROVEMENTS					
LOG MILE	LOCATION	DESCRIPTION	UNITS	TOTAL	REMARKS
MO 249 (NB LM)					
0.309	RT	GUARDRAIL	LF	270	GR, CWT, & BRIDGE TRANS.
0.305	LT	GUARDRAIL	LF	358	GR, CWT, & BRIDGE TRANS.
RTE FF (EB LM)					
4.883	LT	GUARDRAIL	LF	180	GR, CWT, & BRIDGE TRANS.
4.883	RT	GUARDRAIL	LF	180	GR, CWT, & BRIDGE TRANS.
4.936	LT	GUARDRAIL	LF	180	GR, CWT, & BRIDGE TRANS.
4.936	RT	GUARDRAIL	LF	180	GR, CWT, & BRIDGE TRANS.
		TOTAL	1 LUMP SUM		

CONTRACTOR SURVEYING AND STAKING
ONE LUMP SUM

MOBILIZATION
ONE LUMP SUM

PREFORMED THERMOPLASTIC PAVEMENT MARKING TAPE					
LOG MILE	LOCATION	24" YELLOW (LF)	LEFT/ RIGHT ARROW (EACH)	STRAIGHT ARROW (EACH)	REMARKS
RTE FF (EB LM)					
4.920	RT		1	1	BRIDGE #A5154 (OVER I-49)
4.889 - 4.939	CL	132			BRIDGE #A5154 (OVER I-49)
	TOTAL	132	1	1	
	USE	132	1	1	
NOTE: CONTRAST STRIPING ARE INCIDENTAL TO PAVEMENT MARKING					

HIGH BUILD WATERBORNE PAVEMENT MARKING WITH TYPE L BEADS					
BEGIN LOG MILE	END LOG MILE	LOCATION	6" YELLOW (L.F.)	6" WHITE (L.F.)	REMARKS
RTE FF (EB LM, BRIDGE #A5596)					
3.858	3.954	LT		506.9	EB EDGELINE
3.854	3.947	LT		491.0	EB CENTERLINE
3.851	3.943	CL	971.5		CENTER TURNLANE
3.851	3.943	CL	1943.0		CENTER TURNLANE
3.847	3.938	RT		480.5	WB CENTERLINE
3.843	3.936	RT		491.0	WB EDGELINE
RTE FF (EB LM, BRIDGE #A5154)					
3.880	4.939	LT		5591.5	EB EDGELINE
3.880	4.939	LT		5591.5	EB CENTERLINE
3.880	4.939	CL	11183.0		CENTER TURNLANE
3.880	4.939	CL	11183.0		CENTER TURNLANE
3.880	4.939	RT		5591.5	WB CENTERLINE
3.880	4.939	RT		5591.5	WB EDGELINE
MO 249 (NB LM, BRIDGE #A5149)					
0.311	0.360	LT	258.7		EDGELINE
0.312	0.361	CL		258.7	CENTERLINE
0.312	0.361	CL		258.7	CENTERLINE
0.313	0.363	RT		264.0	EDGELINE
		USE	25539.4	25117.0	
		TOTAL	25539	25117	
NOTE: CONTRAST STRIPING ARE INCIDENTAL TO PAVEMENT MARKING					

EROSION CONTROL				
LOG MILE	LOCATION	SILT FENCE (LF)	SEDIMENT REMOVAL (CY)	REMARKS
MO 249 (NB LM, BRIDGE #A5149)				
0.309	RT	275	2.8	GUARDRAIL AREA
0.305	LT	365	3.7	GUARDRAIL AREA
RTE FF (EB LM, BRIDGE #A5154)				
4.883	LT	185	1.9	GUARDRAIL AREA
4.883	RT	185	1.9	GUARDRAIL AREA
4.936	LT	185	1.9	GUARDRAIL AREA
4.936	RT	185	1.9	GUARDRAIL AREA
	TOTAL	1380.0	14.1	
	USE	1380	14	
EROSION CONTROL PLACED AS DIRECTED BY THE ENGINEER				

GUARDRAIL AND SHAPING SLOPES CLASS III							
LOG MILE	LOG MILE	LOCATION	MGS GUARDRAIL (LF)	MGS BRIDGE APP. TRANSITION (EACH)	MGS MASH COMPLIANT CWT (EACH)	SHAPING SLOPES CLASS III (100 FT)	REMARKS
MO 249 (NB LM, BRIDGE #A5149)							
0.250	0.297	LT	175.0	1	1	3.5	BRIDGE OVER I-49
0.269	0.302	RT	262.5	1	1	5.3	BRIDGE OVER I-49
RTE FF (EB LM, BRIDGE #A5154)							
4.860	4.876	LT	87.5	1	1	1.7	BRIDGE OVER I-49
4.860	4.876	RT	87.5	1	1	1.7	BRIDGE OVER I-49
4.947	4.963	LT	87.5	1	1	1.7	BRIDGE OVER I-49
4.947	4.963	RT	87.5	1	1	1.7	BRIDGE OVER I-49
	TOTAL		787.5	6	6	15.6	
	USE		788	6	6	16	

SUMMARY SHEET
SHEET 1 OF 2

STATE OF MISSOURI
CRAIG ALAN SWITZER
NUMBER PE-2003015045
PROFESSIONAL ENGINEER

THIS SHEET HAS BEEN SIGNED, SEALED AND DATED ELECTRONICALLY.

DATE PREPARED 7/31/2020
ROUTE FF | STATE MO
DISTRICT SW | SHEET NO. 3
COUNTY JASPER
JOB NO. J7P3107C
CONTRACT ID.
PROJECT NO.
BRIDGE NO.

DESCRIPTION
DATE

MISSOURI HIGHWAYS AND TRANSPORTATION COMMISSION
105 WEST CAPITOL
JEFFERSON CITY, MO 65102
1-888-ASK-MODOT (1-888-275-6636)

IF A SEAL IS PRESENT ON THIS SHEET IT HAS BEEN ELECTRONICALLY SEALED AND DATED.

EFFECTIVE: 10-01-2019

SIGN	SIZE IN.	AREA SQ.FT.	QTY EACH	TOTAL AREA SQ.FT.	QTY RELOC EACH	TOTAL RELOC SQ.FT.	SIGN NUM.	DESCRIPTION
WARNING SIGNS								
W01-1L	48X48	16.00						TURN (SYMBOL LEFT ARROW)
W01-1R	48X48	16.00						TURN (SYMBOL RIGHT ARROW)
W01-2L	48X48	16.00						CURVE (SYMBOL LEFT ARROW)
W01-2R	48X48	16.00						CURVE (SYMBOL RIGHT ARROW)
W01-3L	48X48	16.00						REVERSE TURN (SYMBOL LEFT ARROW)
W01-3R	48X48	16.00						REVERSE TURN (SYMBOL RIGHT ARROW)
W01-4L	48X48	16.00						REVERSE CURVE (SYMBOL LEFT ARROW)
W01-4R	48X48	16.00						REVERSE CURVE (SYMBOL RIGHT ARROW)
W01-4bL	48X48	16.00						DOUBLE ARROW REVERSE CURVE (SYMBOL LT ARROWS)
W01-4bR	48X48	16.00						DOUBLE ARROW REVERSE CURVE (SYMBOL RT ARROWS)
W01-4cL	48X48	16.00						TRIPLE ARROW REVERSE CURVE (SYMBOL LT ARROWS)
W01-4cR	48X48	16.00						TRIPLE ARROW REVERSE CURVE (SYMBOL RT ARROWS)
W01-6	60X30	12.50						HORIZONTAL ARROW (SYMBOL)
W01-6a	72X36	18.00						HORIZ. ARROW (SYMBOL ON PERMANENT BARRICADE)
W01-7	60X30	12.50						DOUBLE HEAD HORIZONTAL ARROW (SYMBOL)
W01-7a	72X36	18.00						DOUBLE HEAD HORIZ. ARROW (SYMBOL ON PERM. BARR.)
W01-8	18X24	3.00						CHEVRON (SYMBOL)
W01-8a	30X36	7.50						CHEVRON (SYMBOL FOR DIVIDED HIGHWAYS)
W03-1	48X48	16.00						STOP AHEAD (SYMBOL)
W03-2	48X48	16.00						YIELD AHEAD (SYMBOL)
W03-3	48X48	16.00						SIGNAL AHEAD (SYMBOL)
W03-4	48X48	16.00						BE PREPARED TO STOP
W03-5	48X48	16.00						SPEED LIMIT AHEAD
W04-1L	48X48	16.00						MERGE (SYMBOL FROM LEFT)
W04-1R	48X48	16.00						MERGE (SYMBOL FROM RIGHT)
W04-1aL	**48X48**	**16.00**	**2**	**32.00**				**MERGE (ARROW SYMBOL)**
W04-1aR	48X48	16.00						MERGE (ARROW SYMBOL)
W05-1	48X48	16.00						ROAD/BRIDGE/RAMP NARROWS
W05-3	48X48	16.00						ONE LANE BRIDGE
W05-5	48X48	16.00						NARROW LANES
W06-1	48X48	16.00						DIVIDED HIGHWAY (SYMBOL)
W06-2	48X48	16.00						DIVIDED HIGHWAY END (SYMBOL)
W06-3	48X48	16.00						TWO WAY TRAFFIC (SYMBOL)
W07-3a	30X24	5.00						NEXT XX MILES (PLAQUE)
W08-1	**48X48**	**16.00**	**3**	**48.00**				**BUMP**
W08-2	48X48	16.00						DIP
W08-3	48X48	16.00						PAVEMENT ENDS
W08-4	48X48	16.00						SOFT SHOULDER
W08-5	48X48	16.00						SLIPPERY WHEN WET (SYMBOL)
W08-6	48X48	16.00						TRUCK CROSSING
W08-6c	48X48	16.00						TRUCK ENTRANCE
W08-7	36X36	9.00						LOOSE GRAVEL
W08-7a	36X36	9.00						FRESH OIL/LOOSE GRAVEL
W08-9	48X48	16.00						LOW SHOULDER
W08-11	**48X48**	**16.00**	**10**	**160.00**				**UNEVEN LANES**
W08-12	48X48	16.00						NO CENTER LINE
W08-15	48X48	16.00						GROOVED PAVEMENT
W08-15P	30X24	5.00						MOTORCYCLE (PLAQUE)
W08-17	**48X48**	**16.00**	**8**	**128.00**				**SHOULDER DROP-OFF (SYMBOL)**
W08-17P	**30X24**	**5.00**	**8**	**40.00**				**SHOULDER DROP-OFF (PLAQUE)**
W10-1	42RND.	9.62						RAILROAD CROSSING
W012-1	24X24	4.00						DOUBLE DOWN ARROW (SYMBOL)
W012-2	48X48	16.00						LOW CLEARANCE (SYMBOL)
W012-2X	24X18	3.00						LOW CLEARANCE (PLAQUE)
W012-2a	84X24	14.00						OVERHEAD LOW CLEARANCE (FEET AND INCHES)
W012-4	120X60	50.00						LOW CLEARANCE XX FT XX IN XX MILES AHEAD
W012-5	120X60	50.00						WIDTH RESTRICTION XX FT XX IN XX MILES AHEAD
W013-1	30X30	6.25						ADVISORY SPEED (PLAQUE)
W016-2	30X24	5.00						XXX FEET (PLAQUE)
W016-3	30X24	5.00						X MILE (PLAQUE)
W020-1	**48X48**	**16.00**	**10**	**160.00**				**ROAD/BRIDGE/RAMP WORK AHEAD**
W020-2	48X48	16.00						DETOUR AHEAD
W020-3	48X48	16.00						ROAD CLOSED AHEAD
W020-4	**48X48**	**16.00**	**8**	**128.00**				**ONE LANE ROAD AHEAD**
W020-5	**48X48**	**16.00**	**6**	**96.00**				**RIGHT/CENTER/LEFT LANE CLOSED AHEAD**
W020-5a	48X48	16.00						2 RIGHT/CENTER/LEFT LANES CLOSED AHEAD
W020-6a	**48X48**	**16.00**	**3**	**48.00**				**RIGHT/CENTER/LEFT LANE CLOSED**
W020-7a	**48X48**	**16.00**	**6**	**96.00**				**FLAGGER (SYMBOL) WITH FLAGS**
W021-2	36X36	9.00						FRESH OIL
W021-5	48X48	16.00						SHOULDER WORK AHEAD
W022-1	48X48	16.00						BLASTING ZONE AHEAD
W022-2	42X36	10.50						TURN OFF 2-WAY RADIO AND PHONE
W022-3	42X36	10.50						END BLASTING ZONE
G022-1	21X15	2.19						WET PAINT (ARROW PIVOTS)

SIGN	SIZE IN.	AREA SQ.FT.	QTY EACH	TOTAL SQ.FT.	QTY RELOC EACH	TOTAL RELOC SQ.FT.	SIGN NUM.	DESCRIPTION
GUIDE SIGNS								
E05-1	36X48	12.00						GORE EXIT
E05-2	48X36	12.00						EXIT OPEN
E05-2a	48X36	12.00						EXIT CLOSED
G020-1	60X24	10.00						ROAD WORK NEXT 4 MILES
G020-2	48X24	8.00						END ROAD WORK
G020-4	**36X18**	**4.50**	**2**	**9.00**				**PILOT CAR FOLLOW ME**
G020-4a	42X30	8.75						PILOT CAR IN USE WAIT & FOLLOW
G020-4a	18X12	1.50						PILOT CAR IN USE WAIT & FOLLOW
G020-5aP	**36X24**	**6.00**	**5**	**30.00**				**WORK ZONE (PLAQUE)**
M04-8a	24X18	3.00						END DETOUR
M04-9L	48X36	12.00						DETOUR (LEFT ARROW)
M04-9R	48X36	12.00						DETOUR (RIGHT ARROW)
M04-9P	48X12	4.00						STREET NAME (PLAQUE)
M04-10L	48X18	6.00						DETOUR (ARROW LEFT)
M04-10R	48X18	6.00						DETOUR (ARROW RIGHT)
REGULATORY SIGNS								
R1-1	48X48	13.25						STOP
R1-2	48TRI.	6.93						YIELD
R1-2a	36X36	9.00						TO ONCOMING TRAFFIC (PLAQUE)
R1-3P	30X12	2.50						ALL WAY (PLAQUE)
R2-1	**36X48**	**12.00**	**8**	**96.00**				**SPEED LIMIT 3@ 40.3@ 60.2@ 70**
R3-1	48X48	16.00						NO RIGHT TURN (SYMBOL)
R3-2	48X48	16.00						NO LEFT TURN (SYMBOL)
R3-3	36X36	9.00						NO TURNS
R3-4	48X48	16.00						NO U-TURN (SYMBOL)
R3-7L	30X30	6.25						LEFT LANE MUST TURN LEFT
R3-7R	30X30	6.25						RIGHT LANE MUST TURN RIGHT
R4-1	36X48	12.00						DO NOT PASS
R4-2	36X48	12.00						PASS WITH CARE
R4-8a	36X48	12.00						KEEP LEFT (HORIZONTAL ARROW)
R4-7a	**36X48**	**12.00**	**3**	**36.00**				**KEEP RIGHT (HORIZONTAL ARROW)**
R5-1	30X30	6.25						DO NOT ENTER
R5-1a	36X24	6.00						WRONG WAY
R6-1L	54X18	6.75						ONE WAY ARROW (LEFT)
R6-1R	54X18	6.75						ONE WAY ARROW (RIGHT)
R6-2L	24X30	5.00						ONE WAY (LEFT)
R6-2R	24X30	5.00						ONE WAY (RIGHT)
R9-9	24X12	2.00						SIDEWALK CLOSED
R9-11L	24X18	3.00						SIDEWALK CLOSED AHEAD, (ARROW LEFT) CROSS HERE
R9-11R	24X18	3.00						SIDEWALK CLOSED AHEAD, (ARROW RIGHT) CROSS HERE
R10-6	24X36	6.00						STOP HERE ON RED (45° ARROW)
R11-2	48X30	10.00						ROAD CLOSED
R11-3a	60X30	12.50						ROAD CLOSED XX MILES AHEAD LOCAL TRAFFIC ONLY
R11-4	60X30	12.50						ROAD CLOSED TO THRU TRAFFIC
CONST-3A	60X48	20.00						FINE SIGN
CONST-3X	56X12	4.67						SPEEDING/PASSING (PLATE)
MISCELLANEOUS SIGNS								
CONST-5	48X36	12.00						POINT OF PRESENCE
CONST-5	**96X48**	**32.00**	**3**	**96.00**				**POINT OF PRESENCE**
CONST-7	**48X24**	**8.00**	**3**	**24.00**				**RATE OUR WORK ZONE**
CONST-7	72X36	18.00						RATE OUR WORK ZONE
CONST-8	**48X36**	**12.00**	**4**	**48.00**				**WORK ZONE NO PHONE ZONE**

616-10.05 CONSTRUCTION SIGNS	**TOTAL**	
	1275	
616-10.10 RELOCATED SIGNS		TOTAL 0

ITEM NUMBER	TOTAL QTY	DESCRIPTION
6122008		IMPACT ATTENUATOR 40 MPH (SAND BARRELS)
6122009		IMPACT ATTENUATOR 45 MPH (SAND BARRELS)
6122010		IMPACT ATTENUATOR 50 MPH (SAND BARRELS)
6122012		IMPACT ATTENUATOR 55 MPH (SAND BARRELS)
6122014		IMPACT ATTENUATOR 60 MPH (SAND BARRELS)
6122017		IMPACT ATTENUATOR 65 MPH (SAND BARRELS)
6122019		IMPACT ATTENUATOR 70 MPH (SAND BARRELS)
6122020		REPLACEMENT SAND BARREL
6122030		IMPACT ATTENUATOR (RELOCATION)
6123000A	**2**	**TRUCK OR TRAILER MOUNTED ATTENUATOR (TMA)**
6161007		SPEED LIMIT AND STROBE LIGHT ASSEMBLY
6161008	**8**	**ADVANCED WARNING RAIL SYSTEM**
6161009	**14**	**FLAG ASSEMBLY**
6161012		BUOYS (BOATS KEEP OUT)
6161013		BUOYS (NO WAKE)
6161014		SPECIAL SIGN ASSEMBLY (BOATS KEEP OUT)
6161024		CHANNELIZER (TRIM LINE) WITH LIGHT
6161025	**100**	**CHANNELIZER (TRIM LINE)**
6161030		TYPE III MOVEABLE BARRICADE
6161031		TYPE III MOVEABLE BARRICADE WITH LIGHTS
6161033		DIRECTION INDICATOR BARRICADE
6161034		DIRECTION INDICATOR BARRICADE, WITH LIGHT
6161040	**4**	**FLASHING ARROW PANEL**
6161047		TYPE III OBJECT MARKER
6161052		WARNING LIGHT, TYPE B
6161055		SEQUENTIAL FLASHING WARNING LIGHT
6161070		TUBULAR MARKER
6161095		RADAR SPEED ADVISORY SYSTEM
6161096		CHANGEABLE MESSAGE SIGN, COMMISSION FURNISHED/RETAINED
6161098A		CHANGEABLE MESSAGE SIGN W/O COMM. INTERFACE, CONTRACTOR FURNISHED/RETAINED
6161099	**4**	**CHANGEABLE MESSAGE SIGN WITH COMM. INTERFACE, CONTRACTOR FURNISHED/RETAINED**
6162000A		WORK ZONE TRAFFIC SIGNAL SYSTEM
6162002		TEMPORARY LONG-TERM RUMBLE STRIPS
6162004		TEMPORARY SHORT-TERM RUMBLE STRIPS
6173600D		TEMPORARY TRAFFIC BARRIER CONTRACTOR FURNISHED/RETAINED
6173602B		TEMPORARY TRAFFIC BARRIER CONTRACTOR FURNISHED/COMMISSION RETAINED
6174000A		TEMP. TRAFFIC BARRIER HEIGHT TRANSITION
6175010A		RELOCATING TEMPORARY TRAFFIC BARRIER
6176000B		TEMPORARY TRAFFIC BARRIER COMMISSION FURNISHED/RETAINED
6177000B		TEMP. TRAFFIC BARRIER HEIGHT TRANSITION COMMISSION FURNISHED/RETAINED
6208064A		TEMPORARY RAISED PAVEMENT MARKER
9029400		TEMPORARY TRAFFIC SIGNALS
9029401		TEMPORARY TRAFFIC SIGNALS AND LIGHTING

INCLUDES QTY FOR CONSTRUCTION ON 2 BRIDGES AT ONE TIME

SUMMARY SHEET
SHEET 2 OF 2

STATE OF MISSOURI
CRAIG ALAN SWITZER
NUMBER PE-2003015045
PROFESSIONAL ENGINEER

THIS SHEET HAS BEEN SIGNED, SEALED AND DATED ELECTRONICALLY.

DATE PREPARED 7/31/2020

ROUTE	STATE
FF	MO
DISTRICT	SHEET NO.
SW	3

COUNTY: JASPER

JOB NO. J7P3107C

CONTRACT ID.

PROJECT NO.

BRIDGE NO.

DATE	DESCRIPTION

MISSOURI HIGHWAYS AND TRANSPORTATION COMMISSION
105 WEST CAPITOL
JEFFERSON CITY, MO 65102
1-888-ASK-MODOT (1-888-275-6636)

IF A SEAL IS PRESENT ON THIS SHEET IT HAS BEEN ELECTRONICALLY SEALED AND DATED.

BRIDGE #A5154

ROUTE FF OVER I-49

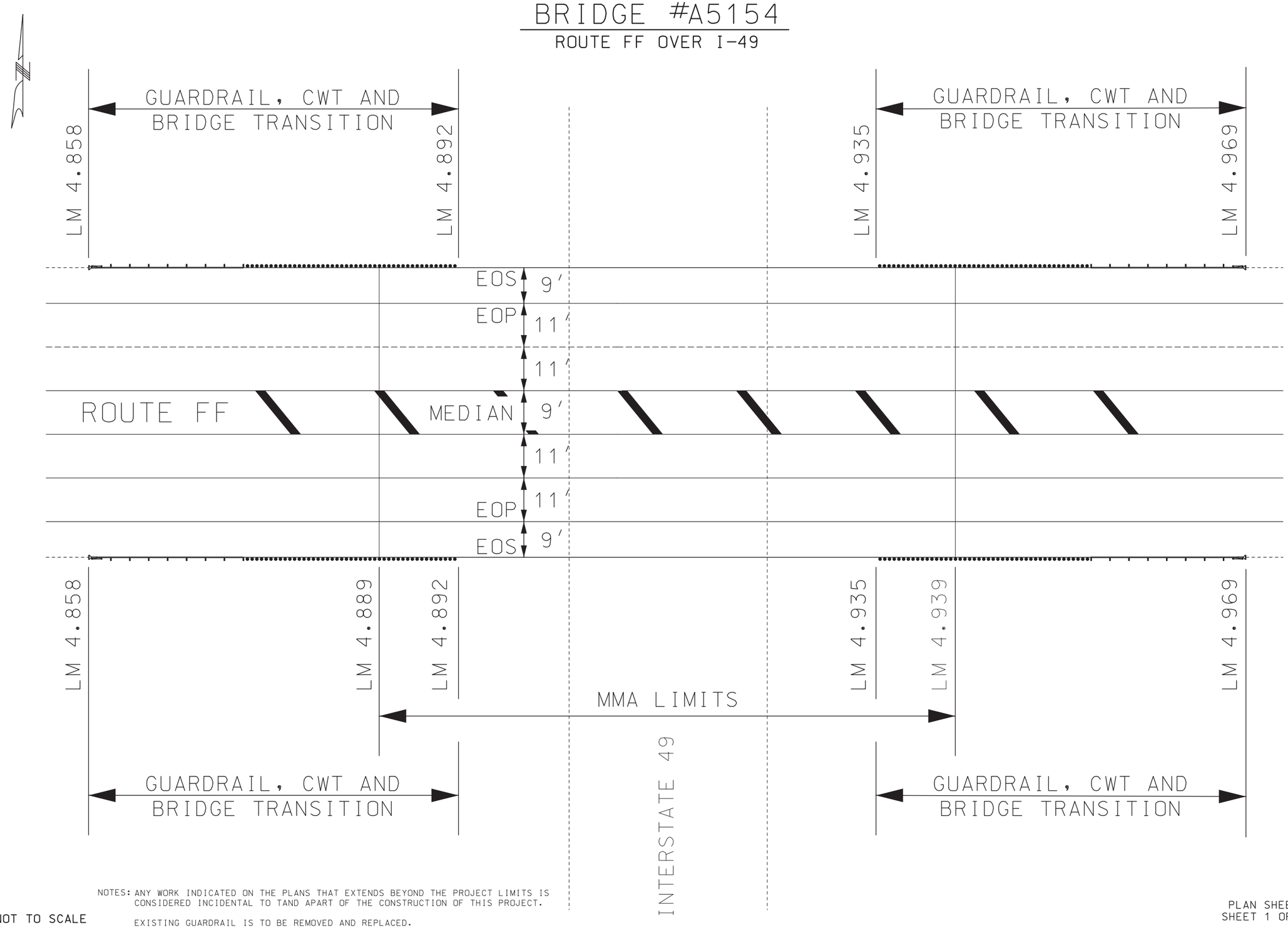

NOTES: ANY WORK INDICATED ON THE PLANS THAT EXTENDS BEYOND THE PROJECT LIMITS IS CONSIDERED INCIDENTAL TO TAND APART OF THE CONSTRUCTION OF THIS PROJECT.

EXISTING GUARDRAIL IS TO BE REMOVED AND REPLACED.

NOT TO SCALE

PLAN SHEET
SHEET 1 OF 3

STATE OF MISSOURI
CRAIG ALAN SWITZER
NUMBER PE-2003015045
PROFESSIONAL ENGINEER

THIS SHEET HAS BEEN SIGNED, SEALED AND DATED ELECTRONICALLY.

DATE PREPARED 7/31/2020

ROUTE	STATE
FF	MO
DISTRICT	SHEET NO.
SW	4

COUNTY: JASPER

JOB NO. J7P3107C

CONTRACT ID.

PROJECT NO.

BRIDGE NO.

DATE	DESCRIPTION

MISSOURI HIGHWAYS AND TRANSPORTATION COMMISSION

105 WEST CAPITOL
JEFFERSON CITY, MO 65102
1-888-ASK-MODOT (1-888-275-6636)

IF A SEAL IS PRESENT ON THIS SHEET IT HAS BEEN ELECTRONICALLY SEALED AND DATED.

BRIDGE #A5596

ROUTE FF OVER I-44

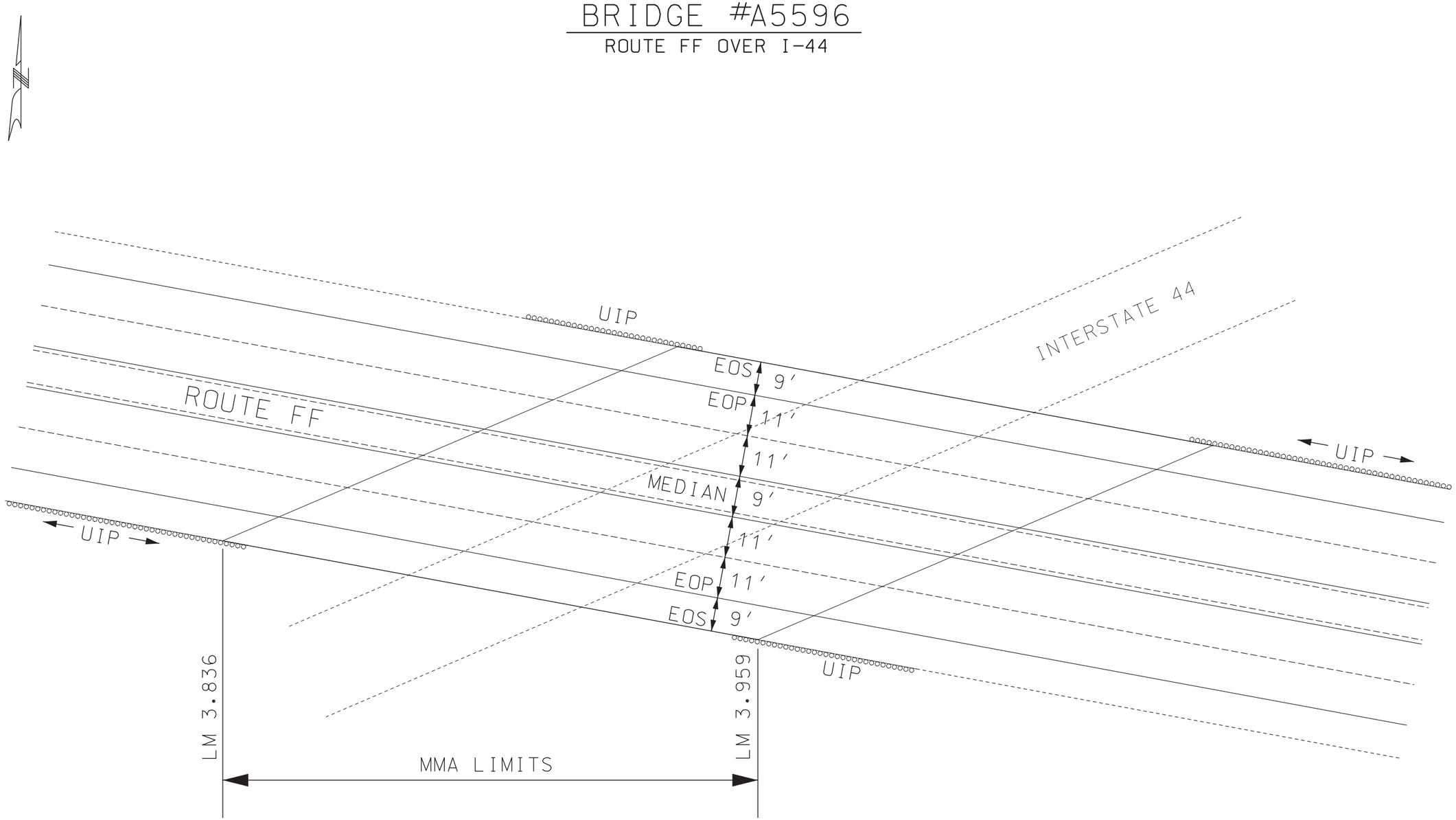

NOT TO SCALE

NOTES: ANY WORK INDICATED ON THE PLANS THAT EXTENDS BEYOND THE PROJECT LIMITS IS CONSIDERED INCIDENTAL TO TAND APART OF THE CONSTRUCTION OF THIS PROJECT.

PLAN SHEET
SHEET 2 OF 3

STATE OF MISSOURI
CRAIG ALAN SWITZER
NUMBER PE-2003015045
PROFESSIONAL ENGINEER

THIS SHEET HAS BEEN SIGNED, SEALED AND DATED ELECTRONICALLY.

DATE PREPARED	7/31/2020
ROUTE	FF
STATE	MO
DISTRICT	SW
SHEET NO.	5
COUNTY	JASPER
JOB NO.	J7P3107C
CONTRACT ID.	
PROJECT NO.	
BRIDGE NO.	

DATE	DESCRIPTION

MISSOURI HIGHWAYS AND TRANSPORTATION COMMISSION

105 WEST CAPITOL
JEFFERSON CITY, MO 65102
1-888-ASK-MODOT (1-888-275-6636)

IF A SEAL IS PRESENT ON THIS SHEET IT HAS BEEN ELECTRONICALLY SEALED AND DATED.

BRIDGE #A5149

NORTHBOUND MO 245 OVER I-44

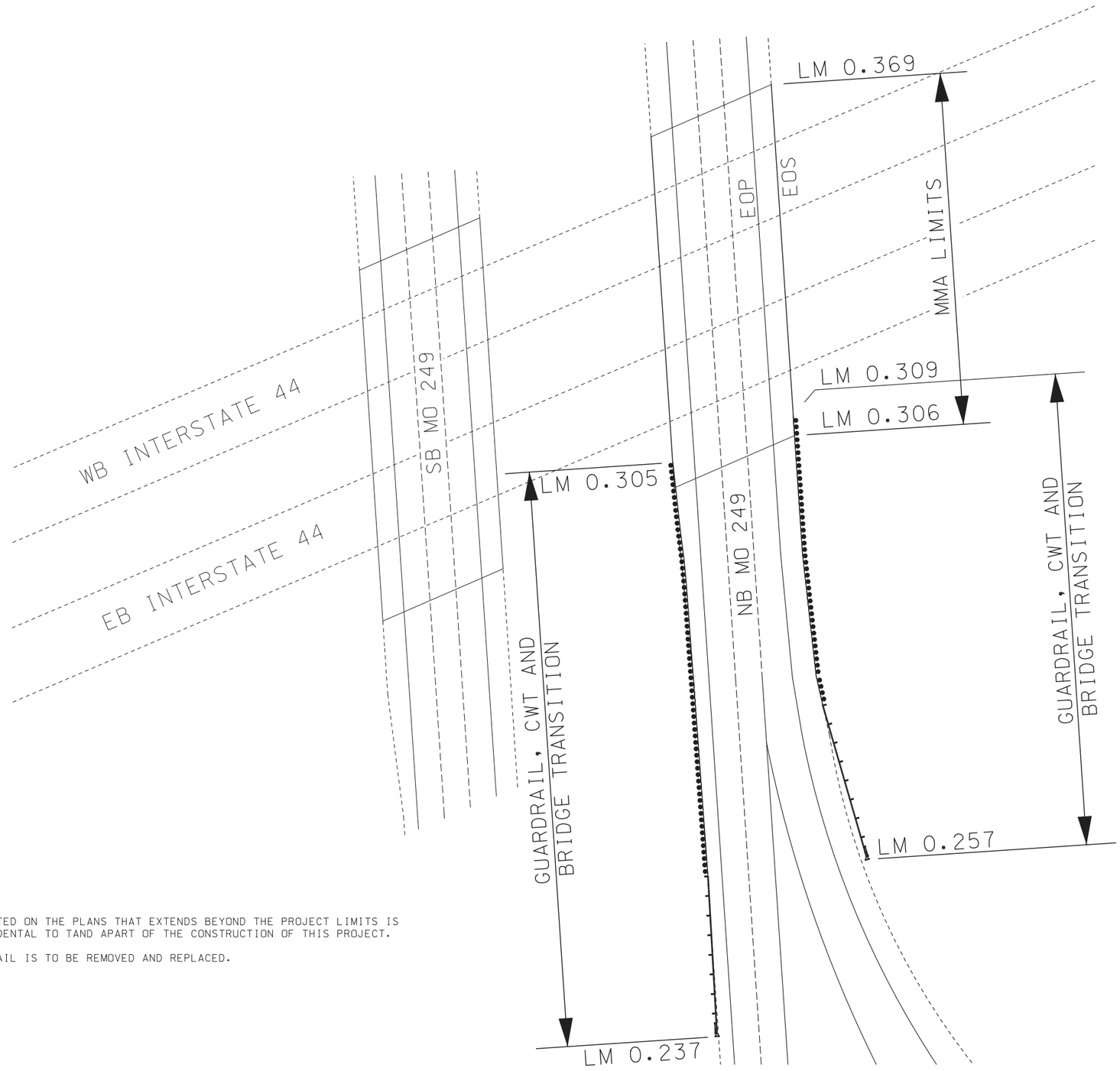

LANE WIDTHS

NB LANES: 12'
SHOULDERS: 5.5'

NOTES: ANY WORK INDICATED ON THE PLANS THAT EXTENDS BEYOND THE PROJECT LIMITS IS CONSIDERED INCIDENTAL TO TAND APART OF THE CONSTRUCTION OF THIS PROJECT.

EXISTING GUARDRAIL IS TO BE REMOVED AND REPLACED.

NOT TO SCALE

PLAN SHEET
SHEET 3 OF 3

STATE OF MISSOURI
CRAIG ALAN SWITZER
NUMBER PE-2003015045
PROFESSIONAL ENGINEER

THIS SHEET HAS BEEN SIGNED, SEALED AND DATED ELECTRONICALLY.

DATE PREPARED	
7/31/2020	
ROUTE	STATE
FF	MO
DISTRICT	SHEET NO.
SW	6
COUNTY	
JASPER	
JOB NO.	
J7P3107C	
CONTRACT ID.	
PROJECT NO.	
BRIDGE NO.	

DESCRIPTION	DATE

MISSOURI HIGHWAYS AND TRANSPORTATION COMMISSION
105 WEST CAPITOL
JEFFERSON CITY, MO 65102
1-888-ASK-MODOT (1-888-275-6636)

IF A SEAL IS PRESENT ON THIS SHEET IT HAS BEEN ELECTRONICALLY SEALED AND DATED.

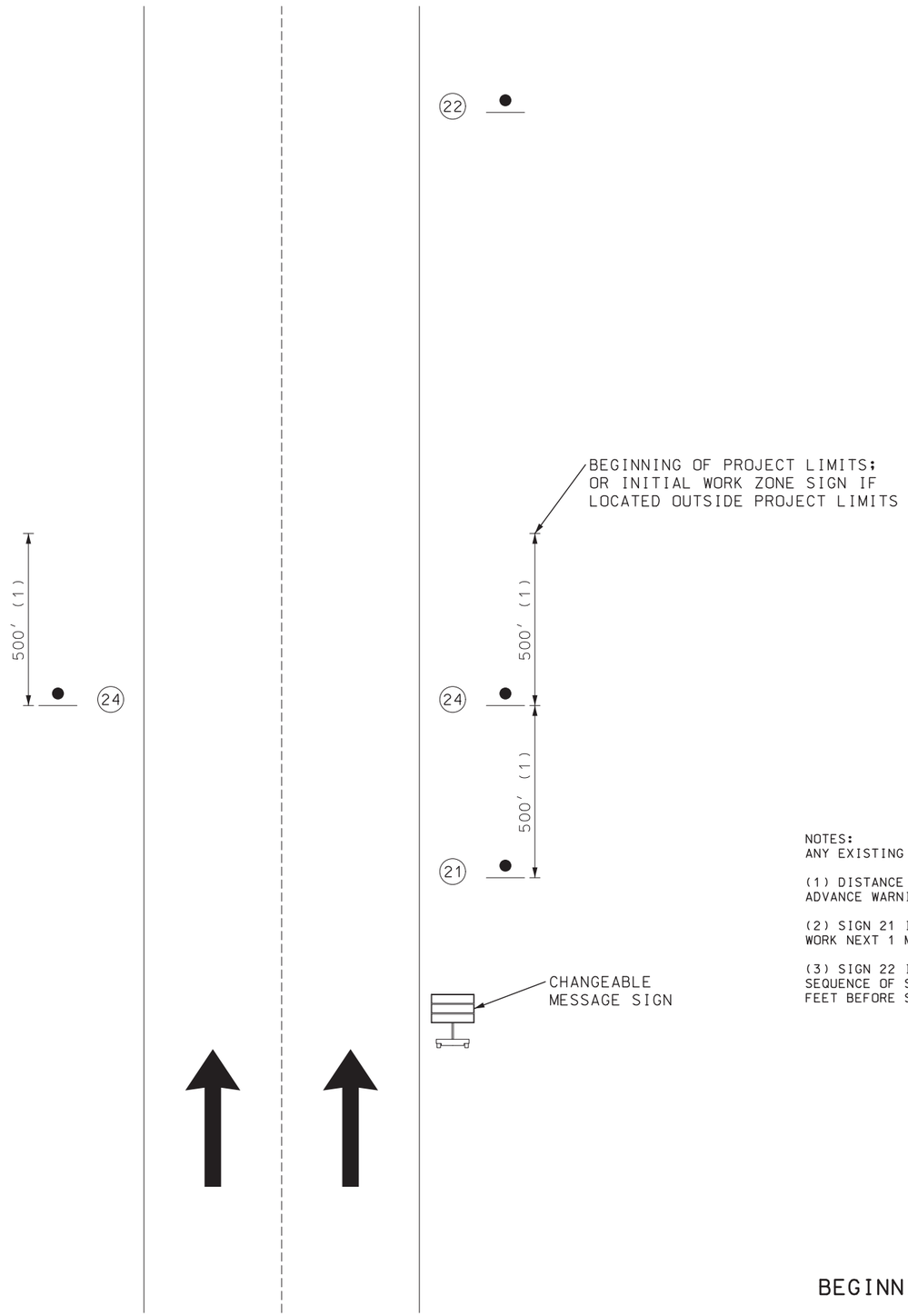

CONST-5-96
96X48

22

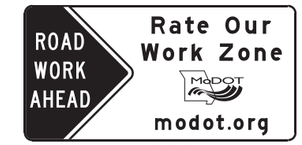

CONST-7-72
72X36

21

CONST-8

24

NOTES:
ANY EXISTING SIGNING THAT CONFLICTS WITH THE TRAFFIC CONTROL SIGNING SHALL BE COMPLETELY COVERED OR REMOVED

(1) DISTANCE MAY BE ADJUSTED ACCORDING TO FIELD CONDITIONS. WHERE TRAFFIC BACKUPS ARE EXPECTED BEYOND THE ADVANCE WARNING AREA, ADDITIONAL SIGNING MAY BE NEEDED

(2) SIGN 21 IS PLACED 500 FEET BEFORE THE BEGINNING OF PROJECT LIMITS OR THE ROAD WORK AHEAD SIGN OR ROAD WORK NEXT 1 MILES SIGN. IF USED, WHEN THESE SIGNS ARE LOCATED OUTSIDE THE PROJECT LIMITS.

(3) SIGN 22 IS PLACED IN A VISIBLE AREA WITHIN THE PROJECT LIMITS PROVIDED ITS PLACEMENT DOES NOT DISRUPT A SEQUENCE OF SIGNS. IF A VISIBLE LOCATION WITHIN THE PROJECT IS NOT AVAILABLE, THE SIGN MAY BE PLACED 500 FEET BEFORE SIGN 21

BEGINNING OF PROJECT

NOT TO SCALE

TRAFFIC CONTROL
SHEET 1 OF 7

STATE OF MISSOURI
CRAIG ALAN SWITZER
NUMBER PE-2003015045
PROFESSIONAL ENGINEER

THIS SHEET HAS BEEN SIGNED, SEALED AND DATED ELECTRONICALLY.

DATE PREPARED	
7/31/2020	
ROUTE	STATE
FF	MO
DISTRICT	SHEET NO.
SW	7
COUNTY	
JASPER	
JOB NO.	
J7P3107C	
CONTRACT ID.	
PROJECT NO.	
BRIDGE NO.	

DATE	DESCRIPTION

MISSOURI HIGHWAYS AND TRANSPORTATION COMMISSION
105 WEST CAPITOL
JEFFERSON CITY, MO 65102
1-888-ASK-MODOT (1-888-275-6636)

IF A SEAL IS PRESENT ON THIS SHEET IT HAS BEEN ELECTRONICALLY SEALED AND DATED.

REVISED: 4-16-2020

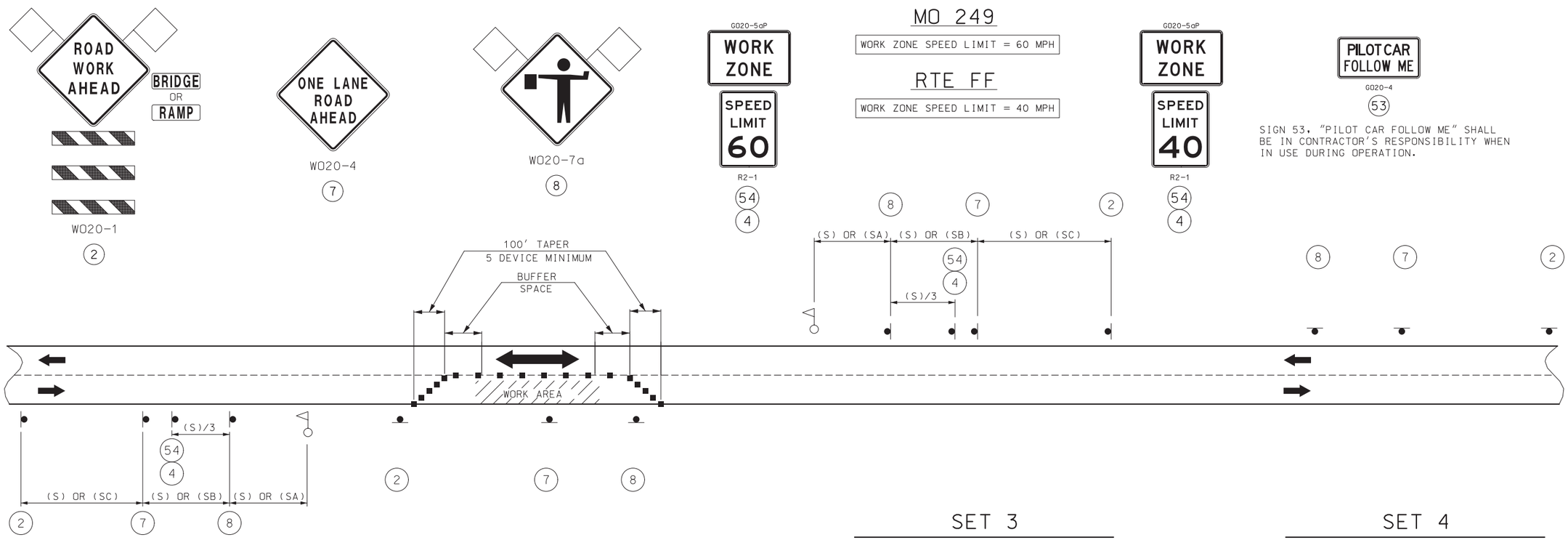

SET 1

ACTIVE

SET 2

INACTIVE

SET 3

ACTIVE

SET 4

INACTIVE

SIGN 53, "PILOT CAR FOLLOW ME" SHALL BE IN CONTRACTOR'S RESPONSIBILITY WHEN IN USE DURING OPERATION.

SIGN SETS 1 AND 3 ARE ACTIVE AND (I.E., SIGNS FACE ONCOMING TRAFFIC).

SIGN SETS 2 AND 4 ARE INACTIVE (I.E., SIGNS DO NOT FACE EITHER DIRECTION OF TRAFFIC) WHEN THE RESURFACING OPERATION IS LOCATED BETWEEN SIGN SETS 1 AND 3.

WHEN SIGN SETS 2 AND 4 ARE ACTIVE, SIGN SETS 1 AND 3 BECOME INACTIVE AND ARE ADVANCED TO BECOME SETS 2 AND 4 WITH SIGN LEGENDS TURNED AWAY FROM BOTH DIRECTIONS OF TRAFFIC. WHEN THE RESURFACING OPERATION ADVANCES TO BETWEEN SIGN SETS 2 AND 4, SIGN SETS 2 AND 4 BECOME ACTIVE (I.E., NEW SIGN SETS 1 AND 3) AND SIGN SETS 1 AND 3 ADVANCED IN THE DIRECTION OF THE OPERATION (I.E., NEW SIGN SETS 2 AND 4).

■ - CHANNELIZERS

- FLAGGER

NOTES:

DAYLIGHT FLAGGING OPERATIONS ONLY.

CHANNELIZING DEVICES LOCATED DOWNSTREAM OF THE ONE-LANE, TWO-WAY TAPER ARE OPTIONAL. THESE DEVICES SHOULD BE ELIMINATED WHEN THEIR USE WILL REDUCE THE USABLE LANE WIDTH, INCLUDING ANY ACCEPTABLE SHOULDERS, TO LESS THAN 10' OR WILL SIGNIFICANTLY AFFECT THE RESURFACING OPERATION.

FLAG ASSEMBLIES FOR SIGNS WILL BE PAID FOR AS EACH PER SIGN, EXCEPT FOR SIGN W020-7 WHICH IS SUBSIDIARY TO THE SIGN.

SPEED	SIGN SPACING (FT) (1)		CHANNELIZER SPACING (FT)		OPTION BUFFER LENGTH (FT)	TAPER LENGTH, FT	
PERMANENT POSTED (MPH)	NON-DIVIDED HIGHWAYS (S)	DIVIDED HIGHWAYS (S)	TAPERS	BUFFER/ WORK AREAS		SHOULDER	LANE
0-35	200	200	35	40	280	70	245
40-45	350	500	40	80	400	150	540
50-55	500	1000	50	80	560	185	660
60-70	1000	SA-1000 SB-1500 SC-2640	60	120	840	235	840

NOTES:

(1) SPACING BETWEEN SIGNS, BETWEEN LAST SIGN AND FLAGGER, BEGINNING OF TAPER OR SIGNED CONDITION.

SPACINGS MAY BE ADJUSTED AS NECESSARY TO MEET FIELD CONDITIONS, AS APPROVED BY ENGINEER.

NOT TO SCALE

TRAFFIC CONTROL
SHEET 2 OF 7

STATE OF MISSOURI
CRAIG ALAN SWITZER
NUMBER PE-2003015045
PROFESSIONAL ENGINEER

THIS SHEET HAS BEEN SIGNED, SEALED AND DATED ELECTRONICALLY.

DATE PREPARED: 7/31/2020

ROUTE	STATE
FF	MO
DISTRICT	SHEET NO.
SW	8

COUNTY: JASPER

JOB NO.: J7P3107C

CONTRACT ID.

PROJECT NO.

BRIDGE NO.

DESCRIPTION	DATE

MISSOURI HIGHWAYS AND TRANSPORTATION COMMISSION

105 WEST CAPITOL
JEFFERSON CITY, MO 65102
1-888-ASK-MODOT (1-888-275-6636)

IF A SEAL IS PRESENT ON THIS SHEET IT HAS BEEN ELECTRONICALLY SEALED AND DATED.

REVISED: 7-7-2020

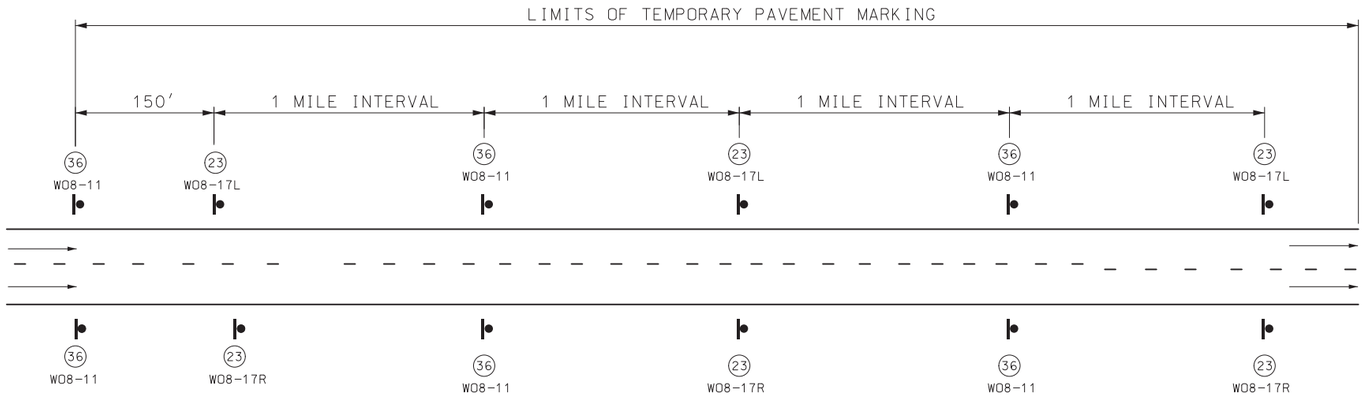

SIGN SPACING FOR DIVIDED OR MULTI-LANE HIGHWAY

(DETAIL SHOWN IS BASED ON A PROJECT MEETING CONDITIONS OF UNEVEN LANES AND SHOULDER DROP-OFF.)
WHEN BOTH UNEVEN LANES AND SHOULDER DROP-OFF SIGNS ARE USED, BOTH SIGNS SHALL STAY IN PLACE UNTIL BOTH CONDITIONS NO LONGER EXISTS.
WHEN ONLY ONE CONDITION EXISTS (UNEVEN LANES OR SHOULDER DROP-OFF), SIGN SPACING SHALL BE AT 1 MILE INTERVALS

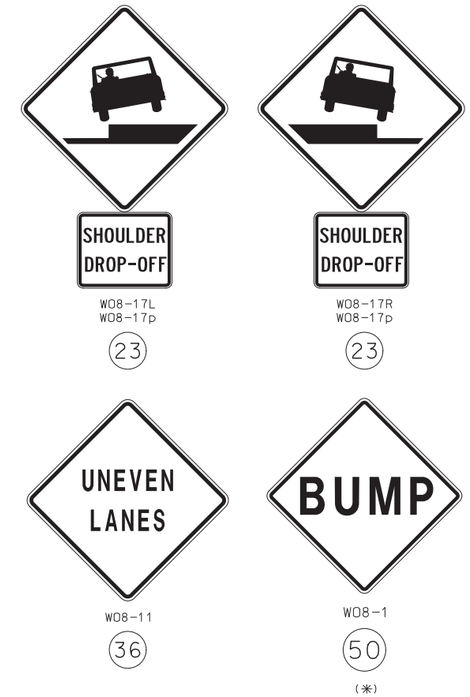

GENERAL NOTES:

ALL SIGNS SHALL BE POST MOUNTED AND IN ACCORDANCE WITH STANDARD PLANS 616.10 AND 903.03.

WHEN SHOULDER DROP-OFF SIGNS ARE IN PLACE FOR GREATER THAN THREE DAYS, THE SHOULDER DROP-OFF PLAQUE SHOULD BE USED IN ADDITION WITH THE SHOULDER DROP-OFF SIGN.

FOR BRIDGE EXCEPTIONS AND COLDMILLED AREAS, LOCATION OF SIGN 50 TO BE APPROVED BY THE ENGINEER.

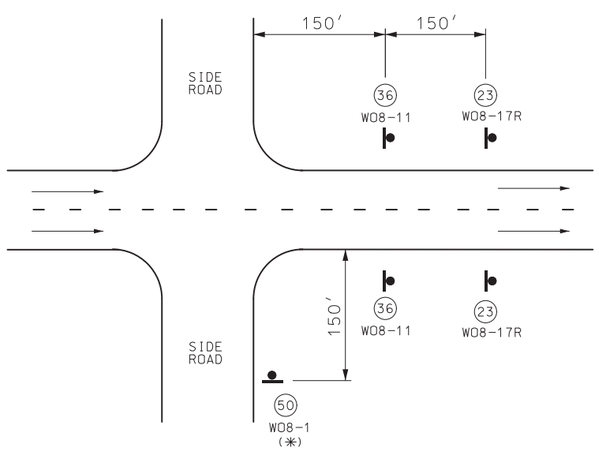

SIGN SPACING AT SIDE ROAD INTERSECTIONS

(✳) BUMP SIGN SHOULD BE IN ACCORDANCE WITH STANDARD PLAN 619.10.

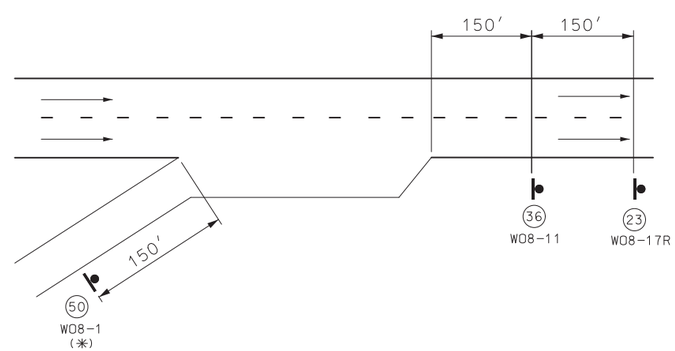

SIGN SPACING AT RAMPS

(✳) BUMP SIGN SHOULD BE IN ACCORDANCE WITH STANDARD PLAN 619.10.

NOT TO SCALE

TRAFFIC CONTROL
SHEET 3 OF 7

STATE OF MISSOURI
CRAIG ALAN SWITZER
NUMBER PE-2003015045
PROFESSIONAL ENGINEER

THIS SHEET HAS BEEN SIGNED, SEALED AND DATED ELECTRONICALLY.

DATE PREPARED 7/31/2020

ROUTE	STATE
FF	MO
DISTRICT	SHEET NO.
SW	9

COUNTY: JASPER
JOB NO.: J7P3107C
CONTRACT ID.
PROJECT NO.
BRIDGE NO.

DATE	DESCRIPTION

MISSOURI HIGHWAYS AND TRANSPORTATION COMMISSION
105 WEST CAPITOL
JEFFERSON CITY, MO 65102
1-888-ASK-MODOT (1-888-275-6636)

IF A SEAL IS PRESENT ON THIS SHEET IT HAS BEEN ELECTRONICALLY SEALED AND DATED.

REVISED: 5-19-2020

OUTSIDE LANE CLOSURE

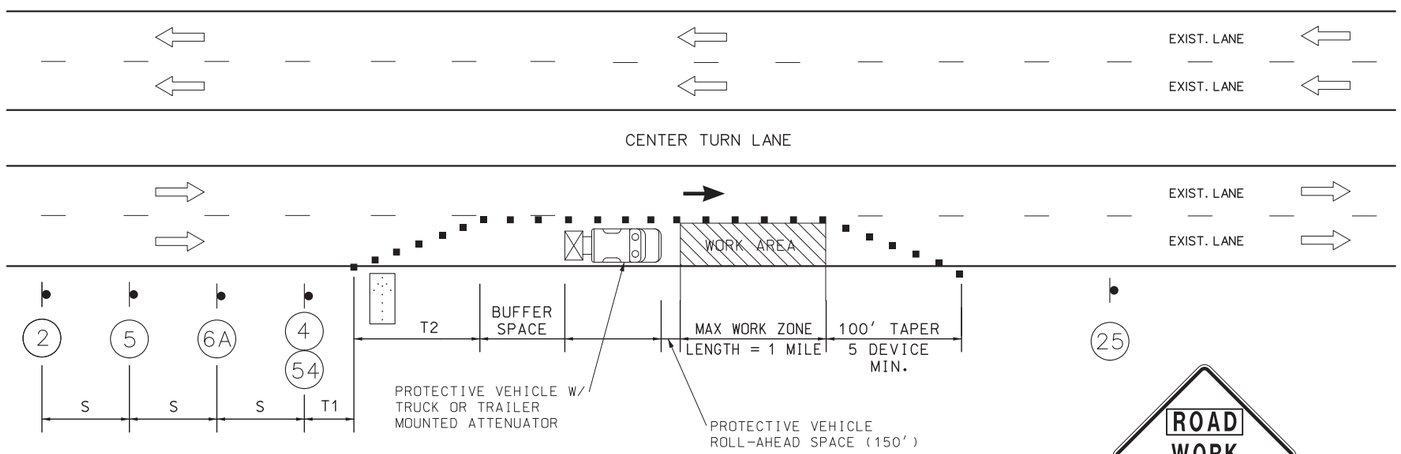

BRIDGE OR RAMP

W020-1
2

MO 249 | RTE FF

R2-1
4

R2-1
4

W020-5
5

LEFT OR CENTER

W04-1aL
6A

(NORMAL SPEED)
R2-1
25

(NORMAL SPEED)
R2-1
25

G020-5aP
54

NOTES:

SEE BEGIN/END OF PROJECT SIGNING SHEET FOR ADDITIONAL SIGNS.

IN TAPER SECTIONS: QUANTITY OF TRIMLINE CHANNELIZERS IS DOUBLED WHEN COMPARED TO MAX. CHANNELIZER SPACING IN THE CHART.

TEMPORARY PAVEMENT MARKING REQUIRED WITH LONG TERM LANE CLOSURES. NO DIRECT PAY.

NO DIRECT PAYMENT WILL BE MADE FOR THE RELOCATION OF CHANNELIZERS, CONST. SIGNS, OR FLASHING ARROW PANEL.

FOR SHORT TERM OPERATIONS WHERE IT IS NOT FEASIBLE TO MODIFY PAVEMENT MARKING, DEVICE SPACING ARE ONE-HALF OF THE SPACING SHOWN IN TABLE.

SPEED LIMIT SIGNS INDICATING THE NORMAL SPEED LIMIT SHALL BE INSTALLED AT THE END OF THE WORK ZONE, PROVIDED NO FURTHER WORK ZONES WILL BE ENCOUNTERED WITHIN THE NEXT 1/2 MILE.

ALL SIGNS, EXCEPT "RATE OUR WORK ZONE" AND "POINT OF PRESENCE", SHALL BE PORTABLE MOUNT AND ARE TO BE MOVED AS WORK PROGRESSES, UNLESS OTHERWISE NOTED. ALL TRAFFIC CONTROL ITEMS SHALL BE REMOVED FROM THE ROADWAY DURING NON-WORKING HOURS. (SEE JSP'S)

WORK WILL REQUIRE LANE CLOSURES UNLESS OTHERWISE APPROVED BY ENGINEER.

LAYOUT IS TYPICAL FOR EITHER DIRECTION.

SEE STANDARD DRAWING 616.10 FOR ADDITIONAL DETAILS.

ADVANCE WARNING SIGN MINIMUM SPACING

SPEED LIMIT[1], MPH	SIGN SPACING[2], FT (S)	
	UNDIVIDED HIGHWAY	DIVIDED HIGHWAY
0-35	200[3]	200[3]
40-45	350	500
50-55	500	1000
60-70	1000	SA-1000 SB-1500 SC-2640

[1]POSTED SPEED LIMIT.
[2]SPACING MAY BE ADJUSTED FOR FIELD CONDITIONS.
[3]FOR URBAN LOW SPEED, MINIMUM RECOMMENDED SPACING IS 100 FT.

TAPER LENGTH AND SPACING

SPEED LIMIT[1], MPH	TAPER LENGTH[2], FT		CHANNELIZING SPACING[3], FT		BUFFER LENGTH, FT
	SHOULDER[4] (T1)	LANE[5] (T2)	TAPERS	BUFFER/ WORK AREA	
0-35	70	245	35[6]	40[6]	280
40-45	150	540	40[6]	80[6]	400
50-55	185	660	50[7]	80[7]	560
60-70	235	840	60[7]	120[7]	840

[1]POSTED SPEED LIMIT.
[2]TAPER LENGTHS MAY BE ADJUSTED.
[3]SPACING MAY BE ADJUSTED FOR FIELD CONDITIONS.
[4]BASED ON 10 FT SHOULDER WIDTH.
[5]BASED ON 12 FT LANE WIDTH.
[6]SPACING REDUCED TO 1/2 AT INTERSECTIONS.
[7]SPACING MAY BE REDUCED TO 1/2 AT INTERSECTIONS.

LEGEND

- SIGN (SINGLE SIDED)
- SIGN (DOUBLE SIDED)
- FLAGGER
- CHANNELIZER(TRIM-LINE)
- FLASHING ARROW PANEL
- OPTIONAL - ATTENUATOR TRUCK WITH FLASHING ARROW PANEL IN CAUTION MODE W/ 150' ROLL AHEAD SPACE
- DIRECTIONAL BARRICADE
- TYPE 3 MOVEABLE BARRICADE

NOT TO SCALE

TRAFFIC CONTROL
SHEET 4 OF 7

STATE OF MISSOURI
CRAIG ALAN SWITZER
NUMBER PE-2003015045
PROFESSIONAL ENGINEER

THIS SHEET HAS BEEN SIGNED, SEALED AND DATED ELECTRONICALLY.

DATE PREPARED 7/31/2020

ROUTE	STATE
FF	MO
DISTRICT	SHEET NO.
SW	10

COUNTY: JASPER
JOB NO.: J7P3107C
CONTRACT ID.
PROJECT NO.
BRIDGE NO.

DESCRIPTION	DATE

MISSOURI HIGHWAYS AND TRANSPORTATION COMMISSION
105 WEST CAPITOL
JEFFERSON CITY, MO 65102
1-888-ASK-MODOT (1-888-275-6636)

IF A SEAL IS PRESENT ON THIS SHEET IT HAS BEEN ELECTRONICALLY SEALED AND DATED.

REVISED: 5-19-2020

PASSING LANE CLOSURE

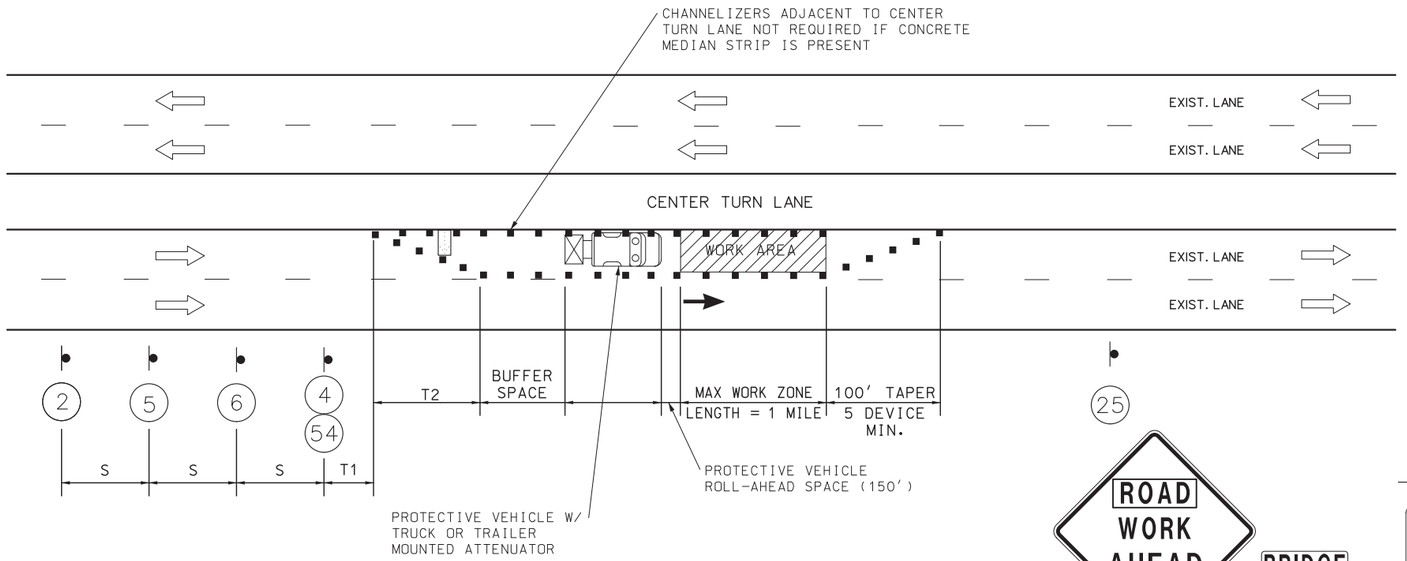

BRIDGE OR RAMP

W020-1

2

MO 249

R2-1

4

RTE FF

R2-1

4

W020-5

5

LEFT OR CENTER

W020-6a

6

CENTER OR LEFT

(NORMAL SPEED)
R2-1

25

(NORMAL SPEED)
R2-1

25

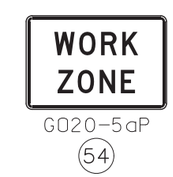

G020-5aP

54

NOTES:

SEE BEGIN/END OF PROJECT SIGNING SHEET FOR ADDITIONAL SIGNS.

IN TAPER SECTIONS: QUANTITY OF TRIMLINE CHANNELIZERS IS DOUBLED WHEN COMPARED TO MAX. CHANNELIZER SPACING IN THE CHART.

TEMPORARY PAVEMENT MARKING REQUIRED WITH LONG TERM LANE CLOSURES. NO DIRECT PAY.

NO DIRECT PAYMENT WILL BE MADE FOR THE RELOCATION OF CHANNELIZERS, CONST. SIGNS, OR FLASHING ARROW PANEL.

FOR SHORT TERM OPERATIONS WHERE IT IS NOT FEASIBLE TO MODIFY PAVEMENT MARKING, DEVICE SPACING ARE ONE-HALF OF THE SPACING SHOWN IN TABLE.

SPEED LIMIT SIGNS INDICATING THE NORMAL SPEED LIMIT SHALL BE INSTALLED AT THE END OF THE WORK ZONE, PROVIDED NO FURTHER WORK ZONES WILL BE ENCOUNTERED WITHIN THE NEXT 1/2 MILE.

ALL SIGNS, EXCEPT "RATE OUR WORK ZONE" AND "POINT OF PRESENCE", SHALL BE PORTABLE MOUNT AND ARE TO BE MOVED AS WORK PROGRESSES, UNLESS OTHERWISE NOTED. ALL TRAFFIC CONTROL ITEMS SHALL BE REMOVED FROM THE ROADWAY DURING NON-WORKING HOURS. (SEE JSP'S)

WORK WILL REQUIRE LANE CLOSURES UNLESS OTHERWISE APPROVED BY ENGINEER.

LAYOUT IS TYPICAL FOR EITHER DIRECTION.

SEE STANDARD DRAWING 616.10 FOR ADDITIONAL DETAILS.

ADVANCE WARNING SIGN MINIMUM SPACING		
SPEED LIMIT[1], MPH	SIGN SPACING[2], FT (S)	
	UNDIVIDED HIGHWAY	DIVIDED HIGHWAY
0-35	200[3]	200[3]
40-45	350	500
50-55	500	1000
60-70	1000	SA-1000 SB-1500 SC-2640

[1]POSTED SPEED LIMIT.
[2]SPACING MAY BE ADJUSTED FOR FIELD CONDITIONS.
[3]FOR URBAN LOW SPEED, MINIMUM RECOMMENDED SPACING IS 100 FT.

TAPER LENGTH AND SPACING					
SPEED LIMIT[1], MPH	TAPER LENGTH[2], FT		CHANNELIZING SPACING[3], FT		BUFFER LENGTH, FT
	SHOULDER[4] (T1)	LANE[5] (T2)	TAPERS	BUFFER/ WORK AREA	
0-35	70	245	35[6]	40[6]	280
40-45	150	540	40[6]	80[6]	400
50-55	185	660	50[7]	80[7]	560
60-70	235	840	60[7]	120[7]	840

[1]POSTED SPEED LIMIT.
[2]TAPER LENGTHS MAY BE ADJUSTED.
[3]SPACING MAY BE ADJUSTED FOR FIELD CONDITIONS.
[4]BASED ON 10 FT SHOULDER WIDTH.
[5]BASED ON 12 FT LANE WIDTH.
[6]SPACING REDUCED TO 1/2 AT INTERSECTIONS.
[7]SPACING MAY BE REDUCED TO 1/2 AT INTERSECTIONS.

LEGEND

- SIGN (SINGLE SIDED)
- SIGN (DOUBLE SIDED)
- FLAGGER
- CHANNELIZER (TRIM-LINE)
- FLASHING ARROW PANEL
- OPTIONAL - ATTENUATOR TRUCK WITH FLASHING ARROW PANEL IN CAUTION MODE W/ 150' ROLL AHEAD SPACE
- DIRECTIONAL BARRICADE
- TYPE 3 MOVEABLE BARRICADE

NOT TO SCALE

TRAFFIC CONTROL
SHEET 5 OF 7

STATE OF MISSOURI
CRAIG ALAN SWITZER
NUMBER PE-2003015045
PROFESSIONAL ENGINEER

THIS SHEET HAS BEEN SIGNED, SEALED AND DATED ELECTRONICALLY.

DATE PREPARED 7/31/2020

ROUTE	STATE
FF	MO
DISTRICT	SHEET NO.
SW	11

COUNTY: JASPER
JOB NO.: J7P3107C
CONTRACT ID.
PROJECT NO.
BRIDGE NO.

DATE	DESCRIPTION

MISSOURI HIGHWAYS AND TRANSPORTATION COMMISSION
105 WEST CAPITOL
JEFFERSON CITY, MO 65102
1-888-ASK-MODOT (1-888-275-6636)

IF A SEAL IS PRESENT ON THIS SHEET IT HAS BEEN ELECTRONICALLY SEALED AND DATED.

REVISED: 5-29-2020

CENTER LANE CLOSURE

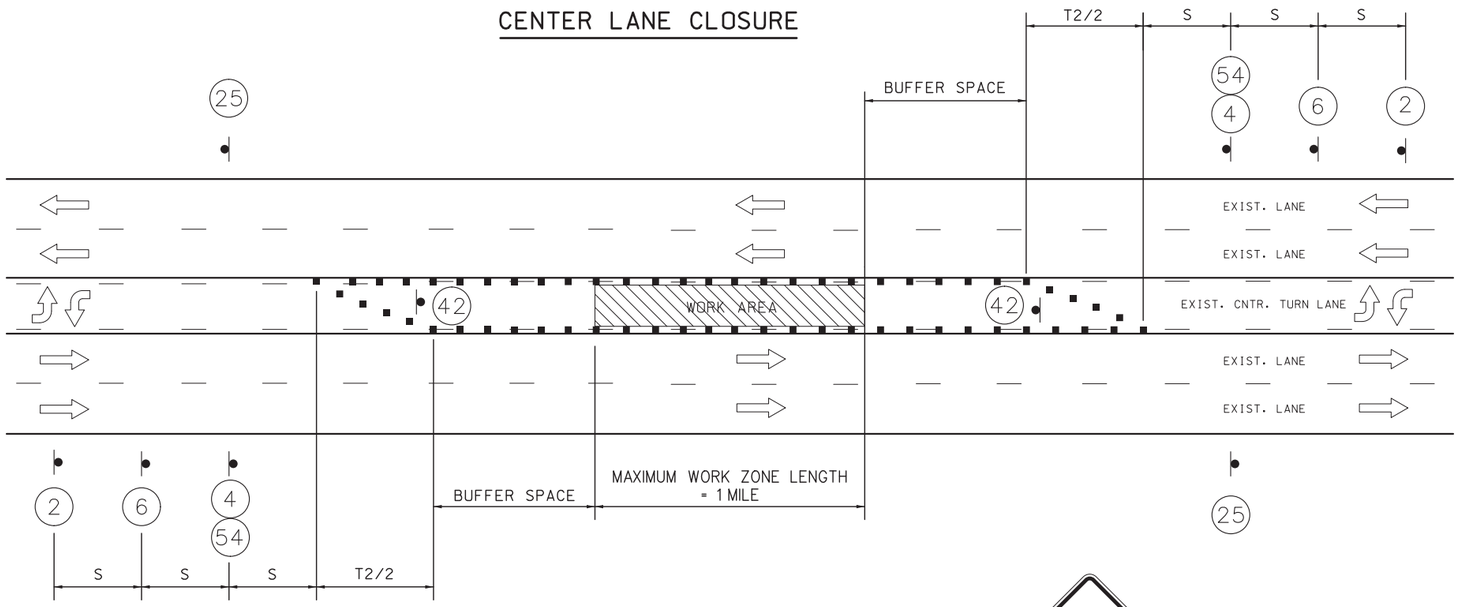

NOTES:

SEE BEGIN/END OF PROJECT SIGNING SHEET FOR ADDITIONAL SIGNS.

IN TAPER SECTIONS: QUANTITY OF TRIMLINE CHANNELIZERS IS DOUBLED WHEN COMPARED TO MAX. CHANNELIZER SPACING IN THE CHART.

TEMPORARY PAVEMENT MARKING REQUIRED WITH LONG TERM LANE CLOSURES. NO DIRECT PAY.

NO DIRECT PAYMENT WILL BE MADE FOR THE RELOCATION OF CHANNELIZERS, CONST. SIGNS, OR FLASHING ARROW PANEL.

FOR SHORT TERM OPERATIONS WHERE IT IS NOT FEASIBLE TO MODIFY PAVEMENT MARKING, DEVICE SPACING ARE ONE-HALF OF THE SPACING SHOWN IN TABLE.

SPEED LIMIT SIGNS INDICATING THE NORMAL SPEED LIMIT SHALL BE INSTALLED AT THE END OF THE WORK ZONE, PROVIDED NO FURTHER WORK ZONES WILL BE ENCOUNTERED WITHIN THE NEXT 1/2 MILE.

ALL SIGNS, EXCEPT "RATE OUR WORK ZONE" AND "POINT OF PRESENCE", SHALL BE PORTABLE MOUNT AND ARE TO BE MOVED AS WORK PROGRESSES, UNLESS OTHERWISE NOTED. ALL TRAFFIC CONTROL ITEMS SHALL BE REMOVED FROM THE ROADWAY DURING NON-WORKING HOURS. (SEE JSP'S)

WORK WILL REQUIRE LANE CLOSURES UNLESS OTHERWISE APPROVED BY ENGINEER.

SEE STANDARD DRAWING 616.10 FOR ADDITIONAL DETAILS.

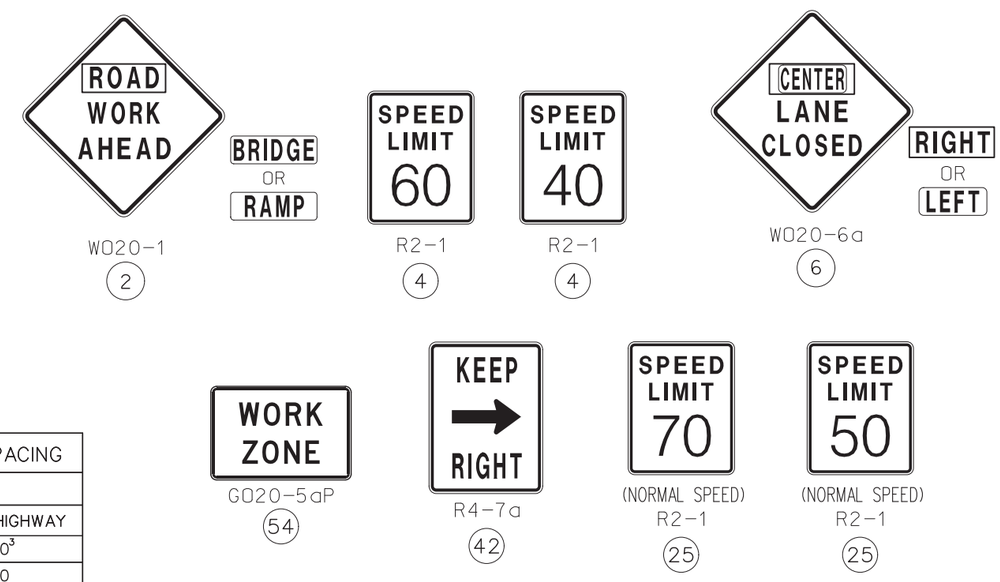

ADVANCE WARNING SIGN MINIMUM SPACING		
SPEED LIMIT[1], MPH	SIGN SPACING[2], FT (S)	
	UNDIVIDED HIGHWAY	DIVIDED HIGHWAY
0-35	200[3]	200[3]
40-45	350	500
50-55	500	1000
60-70	1000	SA-1000 SB-1500 SC-2640

[1]POSTED SPEED LIMIT.
[2]SPACING MAY BE ADJUSTED FOR FIELD CONDITIONS.
[3]FOR URBAN LOW SPEED, MINIMUM RECOMMENDED SPACING IS 100 FT.

LEGEND

- SIGN (SINGLE SIDED)
- SIGN (DOUBLE SIDED)
- FLAGGER
- CHANNELIZER(TRIM-LINE)
- FLASHING ARROW PANEL
- OPTIONAL - ATTENUATOR TRUCK WITH FLASHING ARROW PANEL IN CAUTION MODE W/ 150' ROLL AHEAD SPACE
- DIRECTIONAL BARRICADE
- TYPE 3 MOVEABLE BARRICADE

TAPER LENGTH AND SPACING					
SPEED LIMIT[1], MPH	TAPER LENGTH[2], FT		CHANNELIZING SPACING[3], FT		BUFFER LENGTH, FT
	SHOULDER[4] (T1)	LANE[5] (T2)	TAPERS	BUFFER/ WORK AREA	
0-35	70	245	35[6]	40[6]	280
40-45	150	540	40[6]	80[6]	400
50-55	185	660	50[7]	80[7]	560
60-70	235	840	60[7]	120[7]	840

[1]POSTED SPEED LIMIT.
[2]TAPER LENGTHS MAY BE ADJUSTED.
[3]SPACING MAY BE ADJUSTED FOR FIELD CONDITIONS.
[4]BASED ON 10 FT SHOULDER WIDTH.
[5]BASED ON 12 FT LANE WIDTH.
[6]SPACING REDUCED TO 1/2 AT INTERSECTIONS.
[7]SPACING MAY BE REDUCED TO 1/2 AT INTERSECTIONS.

NOT TO SCALE

TRAFFIC CONTROL
SHEET 6 OF 7

STATE OF MISSOURI
CRAIG ALAN SWITZER
NUMBER PE-2003015045
PROFESSIONAL ENGINEER

THIS SHEET HAS BEEN SIGNED, SEALED AND DATED ELECTRONICALLY.

DATE PREPARED 7/31/2020

ROUTE	STATE
FF	MO
DISTRICT	SHEET NO.
SW	12

COUNTY JASPER
JOB NO. J7P3107C
CONTRACT ID.
PROJECT NO.
BRIDGE NO.

DATE	DESCRIPTION

MISSOURI HIGHWAYS AND TRANSPORTATION COMMISSION
105 WEST CAPITOL
JEFFERSON CITY, MO 65102
1-888-ASK-MODOT (1-888-275-6636)

IF A SEAL IS PRESENT ON THIS SHEET IT HAS BEEN ELECTRONICALLY SEALED AND DATED.

REVISED: 4-16-2020

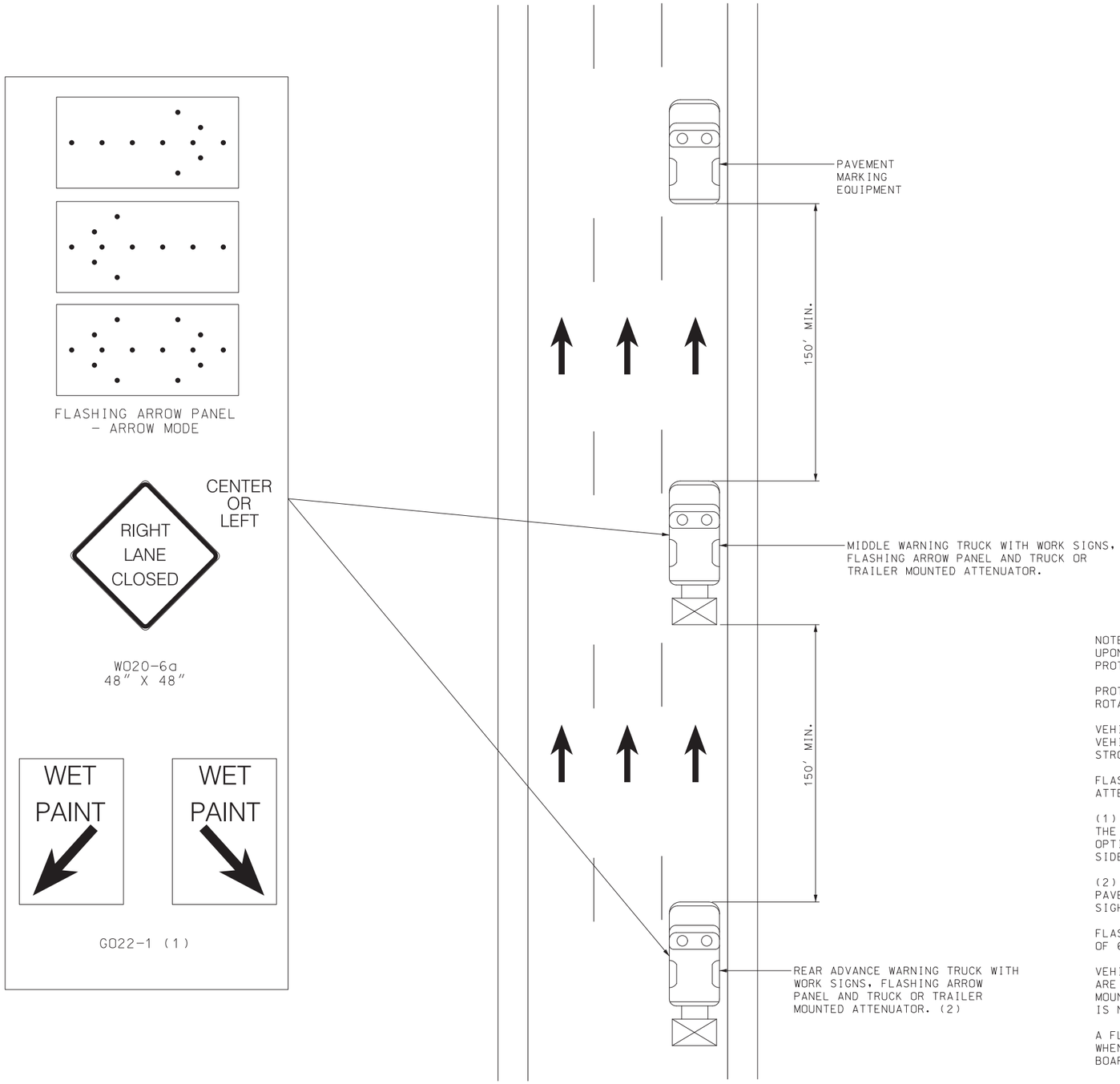

NOTES:
UPON APPROVAL OF THE ENGINEER, THE CONTRACTOR MAY PROVIDE ADDITIONAL PROTECTIVE TRUCKS EQUIPPED WITH PROPER WARNING DEVICES.

PROTECTIVE TRUCK AND WORK VEHICLES SHALL DISPLAY HIGH-INTENSITY ROTATING, FLASHING, OSCILLATING, OR STROBE LIGHTS.

VEHICLE HAZARD WARNING SIGNALS SHALL NOT BE USED INSTEAD OF THE VEHICLE'S HIGH-INTENSITY ROTATING, FLASHING, OSCILLATING, OR STROBE LIGHTS.

FLASHING ARROW PANELS AND SIGNS SHALL BE INCIDENTAL TO TRUCK MOUNTED ATTENUATORS, WHEREVER USED. NO ADDITIONAL PAYMENT SHALL BE MADE.

(1) WET PAINT SIGNS ARE INSTALLED TO INDICATE THE SIDE IN WHICH THE PAVEMENT MARKING MATERIAL IS BEING APPLIED. AT THE CONTRACTOR'S OPTION, A FRONT FACING WET PAINT SIGN MAY BE INSTALLED ON THE LEFT SIDE OF THE PAVEMENT MARKING EQUIPMENT.

(2) REAR ADVANCE WARNING TRUCK IS POSITIONED AT THE NO TRACK POINT OF THE PAVEMENT MARKING MATERIAL, OR VERTICAL OR HORIZONTAL CURVES THAT RESTRICT SIGHT DISTANCE, OR SPACING SHOWN.

FLASHING ARROW PANELS SHALL, AS A MINIMUM, BE TYPE B, WITH A SIZE OF 60 X 30 INCHES.

VEHICLE-MOUNTED SIGNS SHALL BE MOUNTED IN A MANNER SUCH THAT THEY ARE NOT OBSCURED BY EQUIPMENT OR SUPPLIES. SIGN LEGENDS ON VEHICLE-MOUNTED SIGNS SHALL BE COVERED OR TURNED FROM VIEW WHEN WORK IS NOT IN PROGRESS.

A FLASHING ARROW BOARD SHALL BE USED WHEN A FREEWAY LANE IS CLOSED. WHEN MORE THAN ONE LANE CLOSED, A SEPARATE FLASHING ARROW PANEL BOARD SHALL BE USED FOR EACH CLOSED LANE.

NOT TO SCALE

CENTERLINE AND/OR LANE LINE STRIPING ON MULTI-LANE UNDIVIDED HIGHWAYS

TRAFFIC CONTROL
SHEET 7 OF 7

STATE OF MISSOURI
CRAIG ALAN SWITZER
NUMBER PE-2003015045
PROFESSIONAL ENGINEER

THIS SHEET HAS BEEN SIGNED, SEALED AND DATED ELECTRONICALLY.

DATE PREPARED	7/31/2020
ROUTE	FF
STATE	MO
DISTRICT	SW
SHEET NO.	13
COUNTY	JASPER
JOB NO.	J7P3107C
CONTRACT ID.	
PROJECT NO.	
BRIDGE NO.	

DATE	DESCRIPTION

MISSOURI HIGHWAYS AND TRANSPORTATION COMMISSION
105 WEST CAPITOL
JEFFERSON CITY, MO 65102
1-888-ASK-MODOT (1-888-275-6636)

IF A SEAL IS PRESENT ON THIS SHEET IT HAS BEEN ELECTRONICALLY SEALED AND DATED.

REV.

SEC/SUR 16 TWP 27N RGE 32W

U.I.P. AND REHABILITATE EXISTING (129′-129′) CONTINUOUS COMPOSITE PLATE GIRDER SPANS (SKEW: 19°21′20″ R.A.)

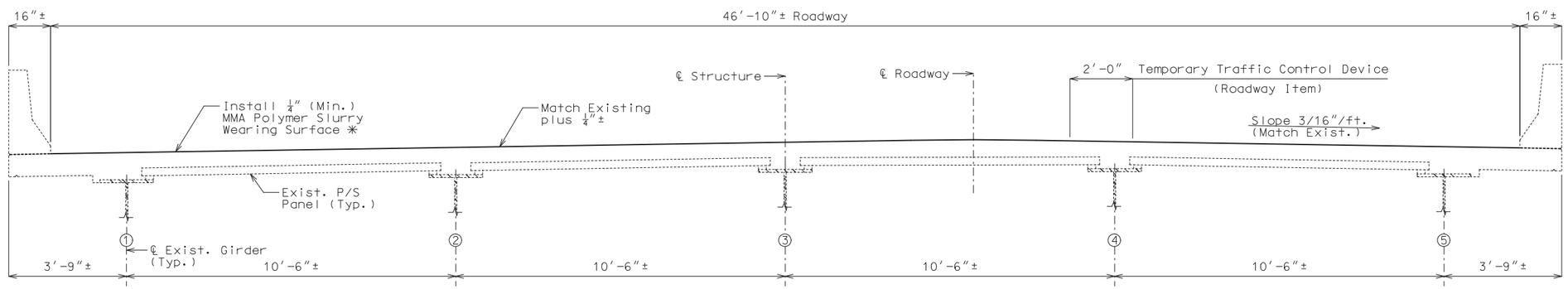

GENERAL NOTES:

Design Specifications:

2002 - AASHTO LFD (17th Edition) Standard Specifications
Bridge Deck Rating = 6

Design Loading:

HS20-44 Modified 24,000 lb Tandem Axle
(1989 & Interims thru 1990) (Existing & New Construction)

Joint Filler:

All joint filler shall be in accordance with Sec 1057 for preformed sponge rubber expansion and partition joint filler, except as noted.

Miscellaneous:

Outline of old work is indicated by light dashed lines. Heavy line indicate new work.

Contractor shall verify all dimensions in field before ordering new material.

Protective coating for concrete bents and piers (Epoxy) shall be applied as shown on the bridge plans and in accordance with Sec 711.

Roadway surfacing adjacent to bridge ends shall match new bridge wearing surface (roadway item).

Traffic Handling:

Traffic to be maintained on structure during construction. See roadway plans for traffic control.

TYPICAL SECTION THRU EXISTING SLAB

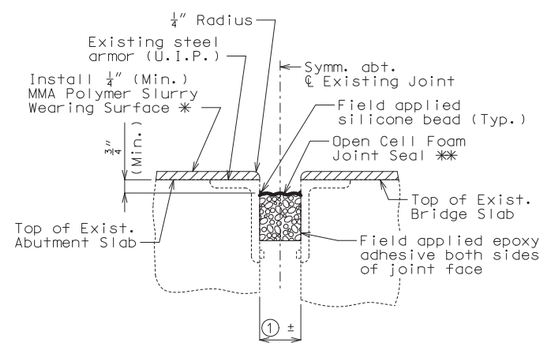

PART SECTION THRU ABUTMENTS NO. 1 & 3 SHOWING OPEN CELL FOAM JOINT SEAL

SKEW = 19°21′20″

✳✳ Manufacturer's recommended size

Extend open cell foam joint seal 3″ past edges of slab.

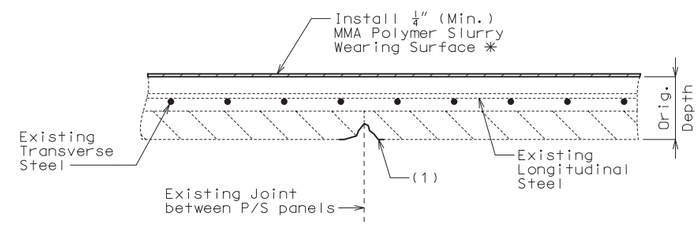

PRESTRESSED PANEL JOINT REPAIR

(LONGITUDINAL SECTION SHOWN)

(1) Remove all deteriorated concrete and loose strands at transverse joint between prestressed panels. See Job Special Provisions.

Movement Parallel to Rdwy	Movement Normal to Joint	Allowed Installation Gap ① Normal to Joint at Roadway Surface @ Air/Surface Temperature ②					
		@ 40°F	@ 50°F	@ 60°F	@ 70°F	@ 80°F	@ 90°F
1 1/2″	1 7/16″	2 3/16″	2 1/8″	2″	1 7/8″	1 13/16″	1 11/16″

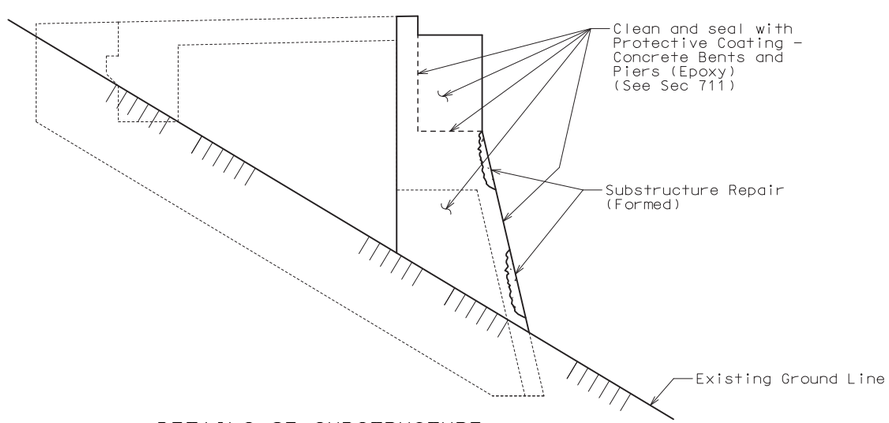

DETAILS OF SUBSTRUCTURE REPAIR & PROTECTIVE COATING AT ABUTMENTS NO. 1 & 3

(Abutment No. 1 shown, Abutment No. 3 similar)

Estimated Quantities

	Item		Total
	Removal of Existing Expansion Joint Seal or Sealant	linear foot	99
✳	MMA Polymer Slurry Wearing Surface	sq. yard	1,854
	Open Cell Foam Joint Seal	linear foot	99
	Removal of Loose Concrete from Prestressed Panel Joints	sq. foot	200
	Substructure Repair (Formed)	sq. foot	400
	Protective Coating - Concrete Bents and Piers (Epoxy)	lump sum	1

✳ Includes bridge deck, abutment slabs and approach slabs.

REPAIRS TO BRIDGE: ROUTE 249 NB OVER I-44

ROUTE 249 NB FROM ROUTE FF TO ROUTE 66
ABOUT 0.5 MILES NORTH OF ROUTE FF
STA. 372+62.23± (MATCH EXISTING)

Detailed Oct. 2019
Checked Mar. 2020

Note: This drawing is not to scale. Follow dimensions.

STD. 616.10

STATE OF MISSOURI
TRAVIS S. STUMP
NUMBER PE-2010000870
PROFESSIONAL ENGINEER
THIS SHEET HAS BEEN SIGNED, SEALED AND DATED ELECTRONICALLY.

DATE PREPARED: 4/20/2020
ROUTE: 249 | STATE: MO
DISTRICT: BR | SHEET NO.: 1
COUNTY: JASPER
JOB NO.: J7P3107C
CONTRACT ID.:
PROJECT NO.:
BRIDGE NO.: A51491

DESCRIPTION | DATE

MISSOURI HIGHWAYS AND TRANSPORTATION COMMISSION
105 WEST CAPITOL
JEFFERSON CITY, MO 65102
1-888-ASK-MODOT (1-888-275-6636)

IF A SEAL IS PRESENT ON THIS SHEET IT HAS BEEN ELECTRONICALLY SEALED AND DATED.

SEC/SUR 16 TWP 27N RGE 32W

U.I.P. AND REHABILITATE EXISTING (112′-112′) CONTINUOUS COMPOSITE PLATE GIRDER SPANS

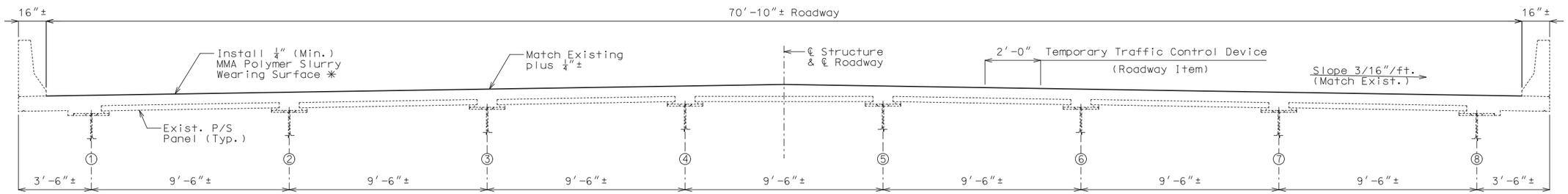

TYPICAL SECTION THRU EXISTING SLAB

GENERAL NOTES:

Design Specifications:

2002 - AASHTO LFD (17th Edition) Standard Specifications
Bridge Deck Rating = 5

Design Loading:

HS20-44 Modified 24,000 lb Tandem Axle
(1989 & Interims thru 1990) (Existing & New Construction)

Joint Filler:

All joint filler shall be in accordance with Sec 1057 for preformed sponge rubber expansion and partition joint filler, except as noted.

Miscellaneous:

Outline of old work is indicated by light dashed lines. Heavy line indicate new work.

Contractor shall verify all dimensions in field before ordering new material.

Protective coating for concrete bents and piers (Epoxy) shall be applied as shown on the bridge plans and in accordance with Sec 711.

Roadway surfacing adjacent to bridge ends shall match new bridge wearing surface (roadway item).

Traffic Handling:

Traffic to be maintained on structure during construction. See roadway plans for traffic control.

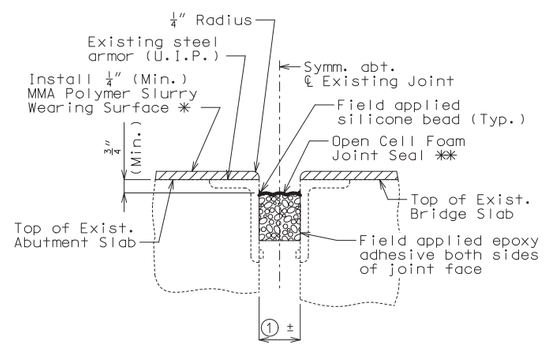

PART SECTION THRU ABUTMENTS NO. 1 & 3 SHOWING OPEN CELL FOAM JOINT SEAL

✳✳ Manufacturer's recommended size

Extend open cell foam joint seal 3″ past edges of slab.

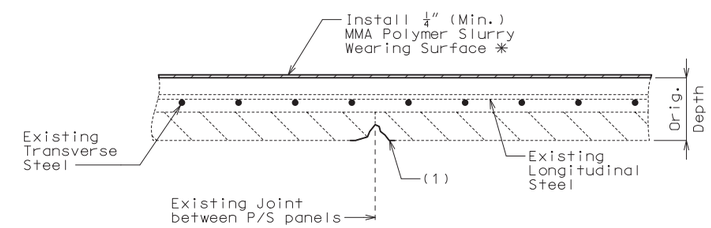

PRESTRESSED PANEL JOINT REPAIR

(LONGITUDINAL SECTION SHOWN)

(1) Remove all deteriorated concrete and loose strands at transverse joint between prestressed panels. See Job Special Provisions.

Movement Parallel to Rdwy	Movement Normal to Joint	Allowed Installation Gap ① Normal to Joint at Roadway Surface @ Air/Surface Temperature ②					
		@ 40°F	@ 50°F	@ 60°F	@ 70°F	@ 80°F	@ 90°F
1 3/8″	1 3/8″	2 3/16″	2 1/16″	2″	1 15/16″	1 13/16″	1 3/4″

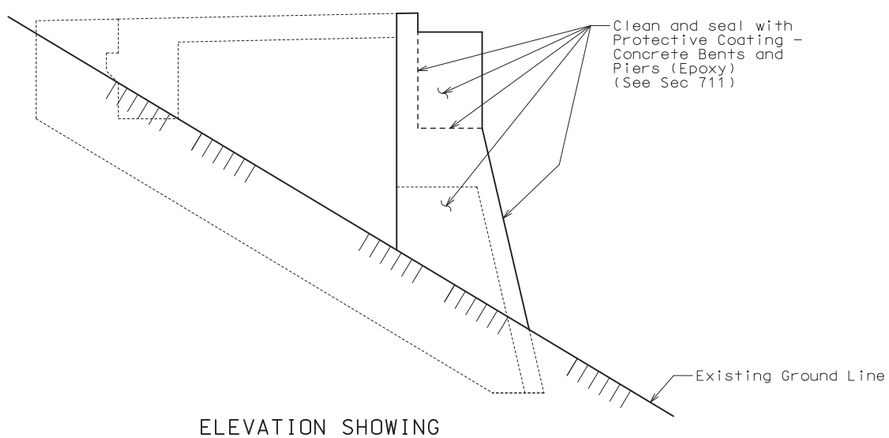

ELEVATION SHOWING PROTECTIVE COATING AT ABUTMENTS NO. 1 & 3

(Abutment No. 1 shown, Abutment No. 3 similar)

Estimated Quantities

	Item		Total
	Removal of Existing Expansion Joint Seal or Sealant	linear foot	142
✳	MMA Polymer Slurry Wearing Surface	sq. yard	2,459
	Open Cell Foam Joint Seal	linear foot	142
	Removal of Loose Concrete from Prestressed Panel Joints	sq. foot	220
	Protective Coating - Concrete Bents and Piers (Epoxy)	lump sum	1

✳ Includes bridge deck, abutment slabs and approach slabs.

REPAIRS TO BRIDGE: ROUTE FF OVER I-49

ROUTE FF FROM ROUTE 43 TO ROUTE 59
ABOUT 4.9 MILES EAST OF ROUTE 43
STA. 43+60.79± (MATCH EXISTING)

STD. 616.10

Detailed Oct. 2019
Checked Mar. 2020

Note: This drawing is not to scale. Follow dimensions.

STATE OF MISSOURI
TRAVIS S. STUMP
NUMBER PE-2010000870
PROFESSIONAL ENGINEER

THIS SHEET HAS BEEN SIGNED, SEALED AND DATED ELECTRONICALLY.

DATE PREPARED 4/20/2020

ROUTE	STATE
FF	MO
DISTRICT	SHEET NO.
BR	1

COUNTY JASPER
JOB NO. J7P3107C
CONTRACT ID.
PROJECT NO.
BRIDGE NO. A51542

DATE	DESCRIPTION

MISSOURI HIGHWAYS AND TRANSPORTATION COMMISSION
105 WEST CAPITOL
JEFFERSON CITY, MO 65102
1-888-ASK-MODOT (1-888-275-6636)

IF A SEAL IS PRESENT ON THIS SHEET IT HAS BEEN ELECTRONICALLY SEALED AND DATED.

SEC/SUR 17 TWP 27N RGE 32W

U.I.P. AND REHABILITATE EXISTING (80′-125′-125′-95′) CONTINUOUS COMPOSITE PLATE GIRDER SPANS (SKEW: 56°6′27″ L.A.)

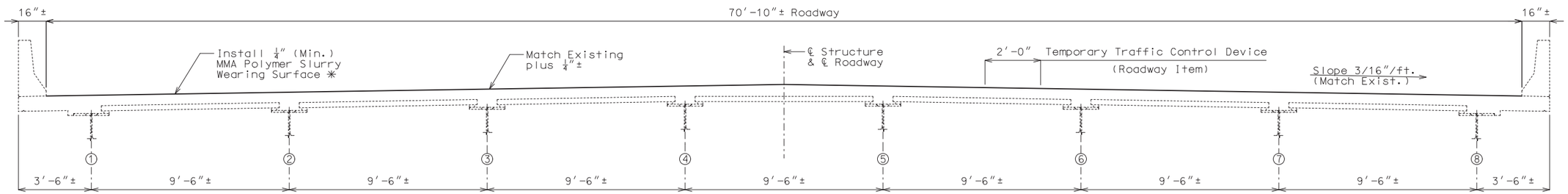

TYPICAL SECTION THRU EXISTING SLAB

GENERAL NOTES:

Design Specifications:

2002 - AASHTO LFD (17th Edition) Standard Specifications
Bridge Deck Rating = 6

Design Loading:

HS20-44 (1992 & Interims thru 1995)
(Existing & New Construction)

Joint Filler:

All joint filler shall be in accordance with Sec 1057 for preformed sponge rubber expansion and partition joint filler, except as noted.

Miscellaneous:

Outline of old work is indicated by light dashed lines. Heavy line indicate new work.

Contractor shall verify all dimensions in field before ordering new material.

Roadway surfacing adjacent to bridge ends shall match new bridge wearing surface (roadway item).

Traffic Handling:

Traffic to be maintained on structure during construction. See roadway plans for traffic control.

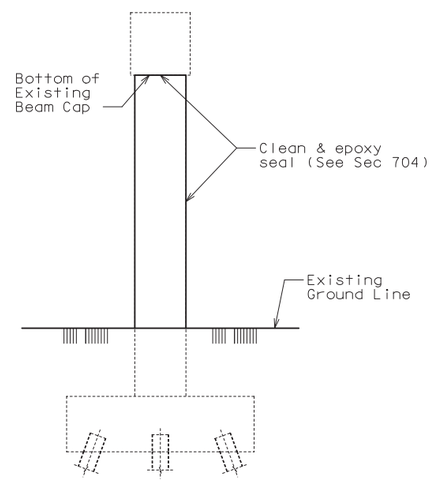

ELEVATION THRU
INT. BENT NO. 3 NORTH COLUMN

Estimated Quantities		
Item		Total
✳ MMA Polymer Slurry Wearing Surface	sq. yard	3,782
Clean and Epoxy Seal	sq. foot	160

✳ Includes bridge deck and approach slabs.

REPAIRS TO BRIDGE: ROUTE FF OVER I-44

ROUTE FF FROM ROUTE 43 TO ROUTE 249
ABOUT 3.9 MILES EAST OF ROUTE 43
STA. 96+92.50± (MATCH EXISTING)

STD. 616.10

Detailed Oct. 2019
Checked Mar. 2020

Note: This drawing is not to scale. Follow dimensions.

STATE OF MISSOURI
TRAVIS S. STUMP
NUMBER PE-2010000870
PROFESSIONAL ENGINEER

THIS SHEET HAS BEEN SIGNED, SEALED AND DATED ELECTRONICALLY.

DATE PREPARED 4/20/2020

ROUTE	STATE
FF	MO
DISTRICT	SHEET NO.
BR	1

COUNTY JASPER

JOB NO. J7P3107C

CONTRACT ID.

PROJECT NO.

BRIDGE NO. A55961

DATE	DESCRIPTION

MISSOURI HIGHWAYS AND TRANSPORTATION COMMISSION
105 WEST CAPITOL
JEFFERSON CITY, MO 65102
1-888-ASK-MODOT (1-888-275-6636)

IF A SEAL IS PRESENT ON THIS SHEET IT HAS BEEN ELECTRONICALLY SEALED AND DATED.