MISSOURI HIGHWAYS AND TRANSPORTATION COMMISSION
PLANS FOR PROPOSED
STATE HIGHWAY

GENTRY COUNTY

DESIGN DESIGNATION

A.A.D.T. - 2020 = 646
A.A.D.T. - 2040 = 872
T = 20%
V = 60 M.P.H.
D = 50%

FUNCTIONAL CLASSIFICATION - MINOR ARTERIAL

NO RIGHT-OF-WAY ACQUISITION

CONVENTIONAL SYMBOLS
(USED IN PLANS)

	EXISTING	NEW
BUILDINGS AND STRUCTURES		
GUARD RAIL		
GUARD CABLE		
CONCRETE RIGHT-OF-WAY MARKER		
STEEL RIGHT-OF-WAY MARKER		
LOCATION SURVEY MARKER		
UTILITIES		
FIBER OPTICS	-FO-	FO
OVERHEAD CABLE TV	-OTV-	OTV
UNDERGROUND CABLE TV	-UTV-	UTV
OVERHEAD TELEPHONE	-OT-	OT
UNDERGROUND TELEPHONE	-UT-	UT
OVERHEAD POWER	-OE-	OE
UNDERGROUND POWER	-UE-	UE
SANITARY SEWER	-S-	S
STORM SEWER	-SS-	SS
GAS	-G-	G
WATER	-W-	W
MANHOLE	SAN	
FIRE HYDRANT	HYD	
WATER VALVE	WV	
WATER METER	WM	
DROP INLET	D	
DITCH BLOCK		
GROUND MOUNTED SIGN	SIGN	
LIGHT POLE		
H-FRAME POWER POLE		
TELEPHONE PEDESTAL	PED	
FENCE		
CHAIN LINK	V	
WOVEN WIRE	X	
GATE POST		
BENCHMARK	BM	

NOTE: DASHED OR OPEN SYMBOLS INDICATE EXISTING FEATURES

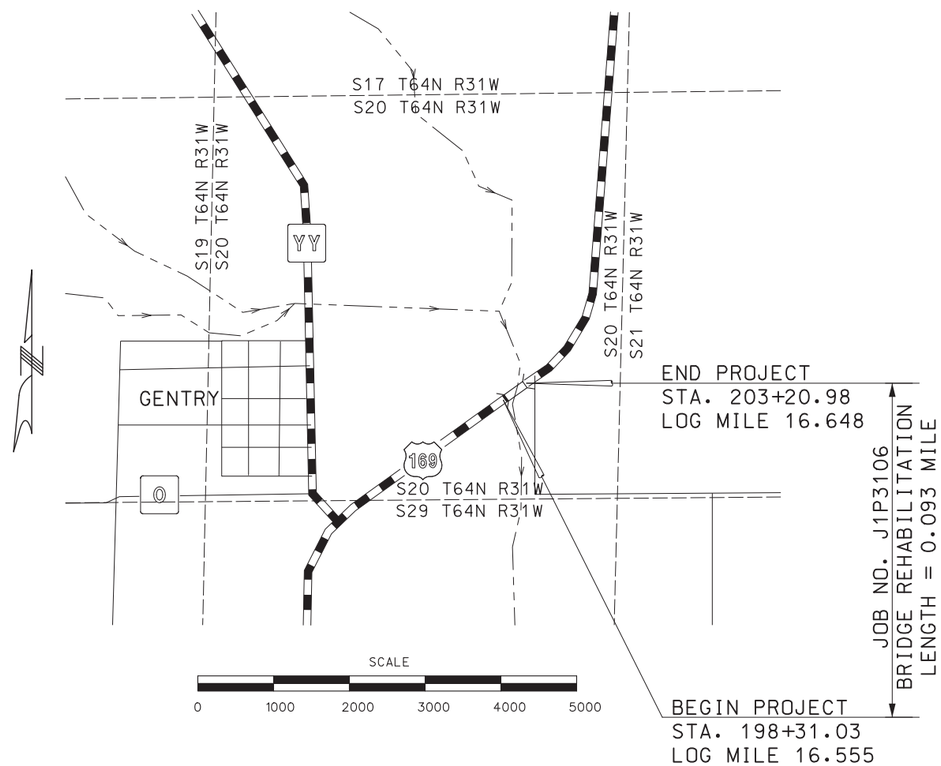

THE EXISTENCE AND APPROXIMATE LOCATION OF UTILITY FACILITIES KNOWN TO EXIST, AS SHOWN ON THE PLANS, ARE BASED ON THE BEST INFORMATION AVAILABLE TO THE COMMISSION AT THIS TIME. THIS INFORMATION IS PROVIDED BY THE COMMISSION "AS-IS" AND THE COMMISSION EXPRESSLY DISCLAIMS ANY REPRESENTATION OR WARRANTY AS TO THE COMPLETENESS, ACCURACY, OR SUITABILITY OF THE INFORMATION FOR ANY USE. RELIANCE UPON THIS INFORMATION IS DONE AT THE RISK AND PERIL OF THE USER, AND THE COMMISSION SHALL NOT BE LIABLE FOR ANY DAMAGES THAT MAY ARISE FROM ANY ERROR IN THE INFORMATION. IT IS, THEREFORE, THE RESPONSIBILITY OF THE CONTRACTOR TO VERIFY THE EXISTENCE, LOCATION AND STATUS OF ANY FACILITY. SUCH VERIFICATION INCLUDES DIRECT CONTACT WITH THE LISTED UTILITIES.

INDEX OF SHEETS

DESCRIPTION	SHEET NUMBER
TITLE SHEET	1
TYPICAL SECTIONS (TS) (1 SHEET)	2
QUANTITIES (QU) (2 SHEETS)	3
PLAN-PROFILE (PP)	4
REFERENCE POINTS (RP)	5
COORDINATE POINTS (CP)	6
TRAFFIC CONTROL SHEETS (TC)	7-10
BRIDGE DRAWINGS (B)	
A07291	1-18

LENGTH OF PROJECT

BEGINNING OF PROJECT	STA. 198 + 31.03	
END OF PROJECT	STA. 203 + 20.98	
APPARENT LENGTH	489.95	FEET
EQUATIONS AND EXCEPTIONS:	NONE	
TOTAL CORRECTIONS	0.00	FEET
NET LENGTH OF PROJECT	489.95	FEET
STATE LENGTH	0.093	MILES
FOR INFORMATION ONLY ESTIMATED DISTURBED ACRES	0.1	ACRES

STATE OF MISSOURI
LISA BELLE MOSLEY
NUMBER PE-2004005376
PROFESSIONAL ENGINEER

THIS SHEET HAS BEEN SIGNED, SEALED AND DATED ELECTRONICALLY.

DATE PREPARED	07/17/2020
ROUTE	169
STATE	MO
DISTRICT	NW
SHEET NO.	1
COUNTY	GENTRY
JOB NO.	J1P3106
CONTRACT ID.	
PROJECT NO.	
BRIDGE NO.	

DATE	DESCRIPTION

IF A SEAL IS PRESENT ON THIS SHEET IT HAS BEEN ELECTRONICALLY SEALED AND DATED.

MISSOURI HIGHWAYS AND TRANSPORTATION COMMISSION
105 WEST CAPITOL
JEFFERSON CITY, MO 65102
1-888-ASK-MODOT (1-888-275-6636)

HNTB
715 KIRK DRIVE
KANSAS CITY, MO 64105-1310
TELEPHONE (816) 472-1201
CERTIFICATE OF AUTHORITY
NO. 001270

REV.

001_TITLE_J1P3106_ITITLESHEET.dgn 9:02:37 AM 7/13/2020

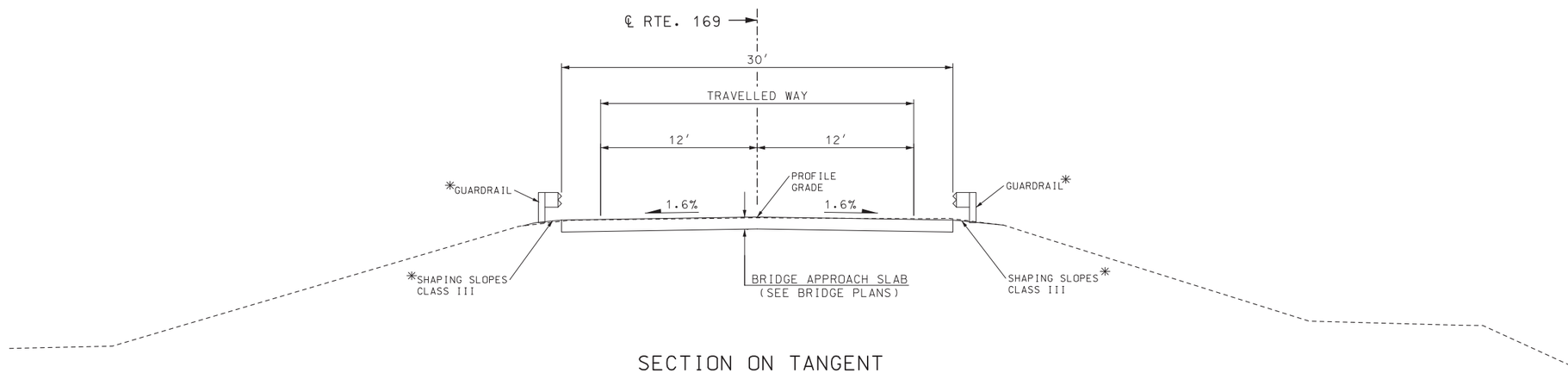

SECTION ON TANGENT

PROPOSED TYPICAL SECTION RTE. 169
STA. 198+41.53 TO STA. 198+61.53
STA. 202+90.98 TO STA. 203+10.98

STATIONS LISTED ABOVE ARE LIMITS ALONG CENTERLINE.
THE BRIDGE APPROACH SLAB IS ON A SKEW AND ACTUAL PAVING
MAY VARY. SEE PLANS FOR ORIENTATION OF THE APPROACH SLAB.

NOTES:

* SEE PLANS FOR TYPE AND STATION LIMITS.

EXISTING CUT/FILL SLOPES INDICATED ON THE TYPICAL SECTION IS BASED ON THE BEST AVAILABLE DATA. EXISTING CONDITIONS MAY VARY AND SHOULD BE CONFIRMED IN THE FIELD.

NOT TO SCALE

TYPICAL SECTION
SHEET 1 OF 1

STATE OF MISSOURI
LISA BELLE MOSLEY
NUMBER PE-2004005376
PROFESSIONAL ENGINEER

THIS SHEET HAS BEEN SIGNED, SEALED AND DATED ELECTRONICALLY.

DATE PREPARED	
07/17/2020	
ROUTE	STATE
169	MO
DISTRICT	SHEET NO.
NW	2
COUNTY	
GENTRY	
JOB NO.	
J1P3106	
CONTRACT ID.	
PROJECT NO.	
BRIDGE NO.	

DATE	DESCRIPTION

IF A SEAL IS PRESENT ON THIS SHEET IT HAS BEEN ELECTRONICALLY SEALED AND DATED.

MISSOURI HIGHWAYS AND TRANSPORTATION COMMISSION
105 WEST CAPITOL
JEFFERSON CITY, MO 65102
1-888-ASK-MODOT (1-888-275-6636)

HNTB
715 KIRK DRIVE
KANSAS CITY, MO 64105-1310
TELEPHONE (816) 472-1201
CERTIFICATE OF AUTHORITY
NO. 001270

REV.

002_TS_J1P3106_I5.dgn 9:02:39 AM 7/13/2020

REMOVAL OF IMPROVEMENTS

SHT.	STA.	STA.	LOCATION	SIDE	DESCRIPTION	QUANTITY	UNITS
4	198+31.82	198+51.12	RTE. 169	LT./RT.	SAWCUT	34	FT
4	203+00.98	203+20.07	RTE. 169	LT./RT.	SAWCUT	34	FT
4	198+31.03	198+72.63	RTE. 169	LT./RT.	REMOVE EXISTING PAVEMENT	61	SY
4	202+79.37	203+81.09	RTE. 169	LT./RT.	REMOVE EXISTING PAVEMENT	61	SY
4	198+48.06	198+48.06	RTE. 169	RT.	REMOVE OBJECT MARKER SIGN AND POST	1	EA
4	198+69.36	198+69.36	RTE. 169	LT.	REMOVE OBJECT MARKER SIGN AND POST	1	EA
4	202+82.10	202+82.10	RTE. 169	RT.	REMOVE OBJECT MARKER SIGN AND POST	1	EA
4	203+03.01	203+03.01	RTE. 169	LT.	REMOVE OBJECT MARKER SIGN AND POST	1	EA
4	203+13.79	203+13.79	RTE. 169	LT.	REMOVE MIDDLE GRAND FORK RIVER SIGN	1	EA
4	198+11.08	198+73.57	RTE. 169	LT.	REMOVE EXISTING GUARDRAIL	62.5	LF
4	197+89.16	198+51.63	RTE. 169	RT.	REMOVE EXISTING GUARDRAIL	62.5	LF
4	203+00.38	203+62.86	RTE. 169	LT.	REMOVE EXISTING GUARDRAIL	62.5	LF
4	202+78.44	203+40.85	RTE. 169	RT.	REMOVE EXISTING GUARDRAIL	62.5	LF
						TOTAL	1 LUMP SUM

MOBILIZATION

1 LUMP SUM

CONTRACTOR FURNISHED SURVEYING AND STAKING

1 LUMP SUM

GUARDRAIL

SHT.	STA.	STA.	LOCATION	SIDE	MGS BRIDGE APPROACH TRANSITION SECTION (REGULAR/NO CURB) (EA)	MGS HEIGHT AND BLOCK TRANSITION (EA)	SHAPING SLOPES CLASS III (100 FT)	REMARKS
4	198+11.08	198+73.57	RTE. 169	LT.	1	1	0.6	
4	197+89.16	198+51.63	RTE. 169	RT.	1	1	0.6	
4	203+00.38	203+62.86	RTE. 169	LT.	1	1	0.6	
4	202+78.44	203+40.85	RTE. 169	RT.	1	1	0.6	
				TOTALS	4	4	2	

STANDARD WATERBORNE PAVEMENT MARKING PAINT

SHT.	STA.	STA.	LOCATION	TYPE P BEADS	
				4″ YELLOW INTERMITTENT (LF)	4″ WHITE EDGE LINE (LF)
4	198+33.13	203+02.07	RTE. 169	--	469
4	198+41.53	203+10.48	RTE. 169	117	--
4	198+49.93	203+18.88	RTE. 169	--	469
			TOTALS	117	938

SUMMARY OF QUANTITIES
SHEET 1 OF 2

STATE OF MISSOURI
LISA BELLE MOSLEY
NUMBER PE-2004005376
PROFESSIONAL ENGINEER

THIS SHEET HAS BEEN SIGNED, SEALED AND DATED ELECTRONICALLY.

DATE PREPARED 07/17/2020
ROUTE 169 | STATE MO
DISTRICT NW | SHEET NO. 3
COUNTY GENTRY
JOB NO. J1P3106
CONTRACT ID.
PROJECT NO.
BRIDGE NO.

DATE	DESCRIPTION

IF A SEAL IS PRESENT ON THIS SHEET IT HAS BEEN ELECTRONICALLY SEALED AND DATED.

MISSOURI HIGHWAYS AND TRANSPORTATION COMMISSION
105 WEST CAPITOL
JEFFERSON CITY, MO 65102
1-888-ASK-MODOT (1-888-275-6636)

HNTB
715 KIRK DRIVE
KANSAS CITY, MO 64105-1310
TELEPHONE (816) 472-1201
CERTIFICATE OF AUTHORITY
NO. 001270

REV.

SIGN	SIZE IN.	AREA SQ.FT.	QTY EACH	TOTAL AREA SQ.FT.	QTY RELOC EACH	TOTAL RELOC SQ.FT.	SIGN NUM.	DESCRIPTION
WARNING SIGNS								
W01-1L	48X48	16.00						TURN (SYMBOL LEFT ARROW)
W01-1R	48X48	16.00						TURN (SYMBOL RIGHT ARROW)
W01-2L	48X48	16.00						CURVE (SYMBOL LEFT ARROW)
W01-2R	48X48	16.00						CURVE (SYMBOL RIGHT ARROW)
W01-3L	48X48	16.00						REVERSE TURN (SYMBOL LEFT ARROW)
W01-3R	48X48	16.00						REVERSE TURN (SYMBOL RIGHT ARROW)
W01-4L	48X48	16.00						REVERSE CURVE (SYMBOL LEFT ARROW)
W01-4R	48X48	16.00						REVERSE CURVE (SYMBOL RIGHT ARROW)
W01-4bL	48X48	16.00						DOUBLE ARROW REVERSE CURVE (SYMBOL LT ARROWS)
W01-4bR	48X48	16.00						DOUBLE ARROW REVERSE CURVE (SYMBOL RT ARROWS)
W01-4cL	48X48	16.00						TRIPLE ARROW REVERSE CURVE (SYMBOL LT ARROWS)
W01-4cR	48X48	16.00						TRIPLE ARROW REVERSE CURVE (SYMBOL RT ARROWS)
W01-6	60X30	12.50						HORIZONTAL ARROW (SYMBOL)
W01-6a	72X36	18.00						HORIZ. ARROW (SYMBOL ON PERMANENT BARRICADE)
W01-7	60X30	12.50						DOUBLE HEAD HORIZONTAL ARROW (SYMBOL)
W01-7a	72X36	18.00						DOUBLE HEAD HORIZ. ARROW (SYMBOL ON PERM. BARR.)
W01-8	18X24	3.00						CHEVRON (SYMBOL)
W01-8a	30X36	7.50						CHEVRON (SYMBOL FOR DIVIDED HIGHWAYS)
W03-1	48X48	16.00						STOP AHEAD (SYMBOL)
W03-2	48X48	16.00						YIELD AHEAD (SYMBOL)
W03-3	48X48	16.00						SIGNAL AHEAD (SYMBOL)
W03-4	48X48	16.00						BE PREPARED TO STOP
W03-5	48X48	16.00						SPEED LIMIT AHEAD
W04-1L	48X48	16.00						MERGE (SYMBOL FROM LEFT)
W04-1R	48X48	16.00						MERGE (SYMBOL FROM RIGHT)
W04-1aL	48X48	16.00						MERGE (ARROW SYMBOL)
W04-1aR	48X48	16.00						MERGE (ARROW SYMBOL)
W05-1	48X48	16.00						ROAD/BRIDGE/RAMP NARROWS
W05-3	48X48	16.00						ONE LANE BRIDGE
W05-5	48X48	16.00						NARROW LANES
W06-1	48X48	16.00						DIVIDED HIGHWAY (SYMBOL)
W06-2	48X48	16.00						DIVIDED HIGHWAY END (SYMBOL)
W06-3	48X48	16.00						TWO WAY TRAFFIC (SYMBOL)
W07-3a	30X24	5.00						NEXT XX MILES (PLAQUE)
W08-1	48X48	16.00						BUMP
W08-2	48X48	16.00						DIP
W08-3	48X48	16.00						PAVEMENT ENDS
W08-4	48X48	16.00						SOFT SHOULDER
W08-5	48X48	16.00						SLIPPERY WHEN WET (SYMBOL)
W08-6	48X48	16.00						TRUCK CROSSING
W08-6c	48X48	16.00						TRUCK ENTRANCE
W08-7	36X36	9.00						LOOSE GRAVEL
W08-7a	36X36	9.00						FRESH OIL/LOOSE GRAVEL
W08-9	48X48	16.00						LOW SHOULDER
W08-11	48X48	16.00						UNEVEN LANES
W08-12	48X48	16.00						NO CENTER LINE
W08-15	48X48	16.00						GROOVED PAVEMENT
W08-15P	30X24	5.00						MOTORCYCLE (PLAQUE)
W08-17	48X48	16.00						SHOULDER DROP-OFF (SYMBOL)
W08-17P	30X24	5.00						SHOULDER DROP-OFF (PLAQUE)
W10-1	42RND.	9.62						RAILROAD CROSSING
W012-1	24X24	4.00						DOUBLE DOWN ARROW (SYMBOL)
W012-2	48X48	16.00						LOW CLEARANCE (SYMBOL)
W012-2X	24X18	3.00						LOW CLEARANCE (PLAQUE)
W012-2a	84X24	14.00						OVERHEAD LOW CLEARANCE (FEET AND INCHES)
W012-4	120X60	50.00						LOW CLEARANCE XX FT XX IN XX MILES AHEAD
W012-5	120X60	50.00						WIDTH RESTRICTION XX FT XX IN XX MILES AHEAD
W013-1	30X30	6.25						ADVISORY SPEED (PLAQUE)
W016-2	30X24	5.00						XXX FEET (PLAQUE)
W016-3	30X24	5.00						X MILE (PLAQUE)
W020-1	48X48	16.00						ROAD/BRIDGE/RAMP WORK AHEAD
W020-2	48X48	16.00	2	32.0			18	DETOUR AHEAD
W020-3	48X48	16.00	2	32.0			20	ROAD CLOSED AHEAD
W020-3a	48X48	16.00	2	32.0			20A	ROAD CLOSED XXX FT
W020-4	48X48	16.00						ONE LANE ROAD AHEAD
W020-5	48X48	16.00						RIGHT/CENTER/LEFT LANE CLOSED AHEAD
W020-6a	48X48	16.00						RIGHT/CENTER/LEFT LANE CLOSED
W020-7a	48X48	16.00						FLAGGER (SYMBOL) WITH FLAGS
W021-2	36X36	9.00						FRESH OIL
W021-5	48X48	16.00						SHOULDER WORK AHEAD
W022-1	48X48	16.00						BLASTING ZONE AHEAD
W022-2	42X36	10.50						TURN OFF 2-WAY RADIO AND PHONE
W022-3	42X36	10.50						END BLASTING ZONE
G022-1	21X15	2.19						WET PAINT (ARROW PIVOTS)

SIGN	SIZE IN.	AREA SQ.FT.	QTY EACH	TOTAL SQ.FT.	QTY RELOC EACH	TOTAL RELOC SQ.FT.	SIGN NUM.	DESCRIPTION
GUIDE SIGNS								
E05-1	36X48	12.00						GORE EXIT
E05-2	48X36	12.00						EXIT OPEN
E05-2a	48X36	12.00						EXIT CLOSED
G020-1	60X24	10.00						ROAD WORK NEXT XX MILES
G020-2	48X24	8.00						END ROAD WORK
G020-4	36X18	4.50						PILOT CAR FOLLOW ME
G020-4a	42X30	8.75						PILOT CAR IN USE WAIT & FOLLOW
G020-4a	18X12	1.50						PILOT CAR IN USE WAIT & FOLLOW
G020-5aP	36X24	6.00						WORK ZONE (PLAQUE)
M04-8a	24X18	3.00	2	6.0			52	END DETOUR
M04-9L	48X36	12.00						DETOUR (LEFT ARROW)
M04-9R	48X36	12.00						DETOUR (RIGHT ARROW)
M04-9P	48X12	4.00						STREET NAME (PLAQUE)
M04-10L	48X18	6.00						DETOUR (ARROW LEFT)
M04-10R	48X18	6.00						DETOUR (ARROW RIGHT)
REGULATORY SIGNS								
R1-1	48X48	13.25						STOP
R1-2	48TRI.	6.93						YIELD
R1-2a	36X36	9.00						TO ONCOMING TRAFFIC (PLAQUE)
R1-3P	30X12	2.50						ALL WAY (PLAQUE)
R2-1	36X48	12.00						SPEED LIMIT XX
R3-1	48X48	16.00						NO RIGHT TURN (SYMBOL)
R3-2	48X48	16.00						NO LEFT TURN (SYMBOL)
R3-3	36X36	9.00						NO TURNS
R3-4	48X48	16.00						NO U-TURN (SYMBOL)
R3-7L	30X30	6.25						LEFT LANE MUST TURN LEFT
R3-7R	30X30	6.25						RIGHT LANE MUST TURN RIGHT
R4-1	36X48	12.00						DO NOT PASS
R4-2	36X48	12.00						PASS WITH CARE
R4-8a	36X48	12.00						KEEP LEFT (HORIZONTAL ARROW)
R4-7a	36X48	12.00						KEEP RIGHT (HORIZONTAL ARROW)
R5-1	30X30	6.25						DO NOT ENTER
R5-1a	36X24	6.00						WRONG WAY
R6-1L	54X18	6.75						ONE WAY ARROW (LEFT)
R6-1R	54X18	6.75						ONE WAY ARROW (RIGHT)
R6-2L	24X30	5.00						ONE WAY (LEFT)
R6-2R	24X30	5.00						ONE WAY (RIGHT)
R9-9	24X12	2.00						SIDEWALK CLOSED
R9-11L	24X18	3.00						SIDEWALK CLOSED AHEAD, (ARROW LEFT) CROSS HERE
R9-11R	24X18	3.00						SIDEWALK CLOSED AHEAD, (ARROW RIGHT) CROSS HERE
R10-6	24X36	6.00						STOP HERE ON RED (45° ARROW)
R11-2	48X30	10.00	2	20.0			29	ROAD CLOSED
R11-3a	60X30	12.50	2	25.0			55	ROAD CLOSED XX MILES AHEAD LOCAL TRAFFIC ONLY
R11-4	60X30	12.50						ROAD CLOSED TO THRU TRAFFIC
CONST-3A	60X48	20.00						FINE SIGN
CONST-3X	56X12	4.67						SPEEDING/PASSING (PLATE)
MISCELLANEOUS SIGNS								
CONST-5	48X36	12.00						POINT OF PRESENCE
CONST-5	96X48	32.00						POINT OF PRESENCE
CONST-7	48X24	8.00						RATE OUR WORK ZONE
CONST-7	72X36	18.00						RATE OUR WORK ZONE
CONST-8	48X36	12.00						WORK ZONE NO PHONE ZONE
DETOUR	36X78	19.50	15	292.5			50	DETOUR ROUTE ASSEMBLY SIGNS
SPECIAL	54X30	11.25	2	22.5			56	SPECIAL US 169 CLOSED AHEAD

	TOTAL
616-10.05 CONSTRUCTION SIGNS	462
616-10.10 RELOCATED SIGNS	0

ITEM NUMBER	TOTAL QTY	DESCRIPTION
6122008		IMPACT ATTENUATOR 40 MPH (SAND BARRELS)
6122009		IMPACT ATTENUATOR 45 MPH (SAND BARRELS)
6122010		IMPACT ATTENUATOR 50 MPH (SAND BARRELS)
6122012		IMPACT ATTENUATOR 55 MPH (SAND BARRELS)
6122014		IMPACT ATTENUATOR 60 MPH (SAND BARRELS)
6122017		IMPACT ATTENUATOR 65 MPH (SAND BARRELS)
6122019		IMPACT ATTENUATOR 70 MPH (SAND BARRELS)
6122020		REPLACEMENT SAND BARREL
6122030		IMPACT ATTENUATOR (RELOCATION)
6123000A		TRUCK OR TRAILER MOUNTED ATTENUATOR (TMA)
6161007		SPEED LIMIT AND STROBE LIGHT ASSEMBLY
6161008	2	ADVANCED WARNING RAIL SYSTEM
6161009		FLAG ASSEMBLY
6161012		BUOYS (BOATS KEEP OUT)
6161013		BUOYS (NO WAKE)
6161014		SPECIAL SIGN ASSEMBLY (BOATS KEEP OUT)
6161024		CHANNELIZER (TRIM LINE) WITH LIGHT
6161025		CHANNELIZER (TRIM LINE)
6161030		TYPE III MOVEABLE BARRICADE
6161031	8	TYPE III MOVEABLE BARRICADE WITH LIGHTS
6161033		DIRECTION INDICATOR BARRICADE
6161034		DIRECTION INDICATOR BARRICADE, WITH LIGHT
6161040		FLASHING ARROW PANEL
6161047		TYPE III OBJECT MARKER
6161052		WARNING LIGHT, TYPE B
6161055		SEQUENTIAL FLASHING WARNING LIGHT
6161070		TUBULAR MARKER
6161095		RADAR SPEED ADVISORY SYSTEM
6161096		CHANGEABLE MESSAGE SIGN, COMMISSION FURNISHED/RETAINED
6161098A	2	CHANGEABLE MESSAGE SIGN W/O COMM. INTERFACE, CONTRACTOR FURNISHED/RETAINED
6161099		CHANGEABLE MESSAGE SIGN WITH COMM. INTERFACE, CONTRACTOR FURNISHED/RETAINED
6162000A		WORK ZONE TRAFFIC SIGNAL SYSTEM
6162002		TEMPORARY LONG-TERM RUMBLE STRIPS
6162004		TEMPORARY SHORT-TERM RUMBLE STRIPS
6173600D		TEMPORARY TRAFFIC BARRIER CONTRACTOR FURNISHED/RETAINED
6173602B		TEMPORARY TRAFFIC BARRIER CONTRACTOR FURNISHED/COMMISSION RETAINED
6174000A		TEMP. TRAFFIC BARRIER HEIGHT TRANSITION
6175010A		RELOCATING TEMPORARY TRAFFIC BARRIER
6176000B		TEMPORARY TRAFFIC BARRIER COMMISSION FURNISHED/RETAINED
6177000B		TEMP. TRAFFIC BARRIER HEIGHT TRANSITION COMMISSION FURNISHED/RETAINED
6208064A		TEMPORARY RAISED PAVEMENT MARKER
9029400		TEMPORARY TRAFFIC SIGNALS
9029401		TEMPORARY TRAFFIC SIGNALS AND LIGHTING

SUMMARY OF QUANTITIES
SHEET 2 OF 2

STATE OF MISSOURI
LISA BELLE MOSLEY
NUMBER PE-2004005376
PROFESSIONAL ENGINEER

THIS SHEET HAS BEEN SIGNED, SEALED AND DATED ELECTRONICALLY.

DATE PREPARED 07/17/2020

ROUTE	STATE
169	MO
DISTRICT	SHEET NO.
NW	3

COUNTY: GENTRY
JOB NO.: J1P3106
CONTRACT ID.
PROJECT NO.
BRIDGE NO.

DESCRIPTION | DATE

IF A SEAL IS PRESENT ON THIS SHEET IT HAS BEEN ELECTRONICALLY SEALED AND DATED.

MISSOURI HIGHWAYS AND TRANSPORTATION COMMISSION
105 WEST CAPITOL
JEFFERSON CITY, MO 65102
1-888-ASK-MODOT (1-888-275-6636)

HNTB
715 KIRK DRIVE
KANSAS CITY, MO 64105-1310
TELEPHONE (816) 472-1201
CERTIFICATE OF AUTHORITY
NO. 001270

REV.

NOTES:
1. ANY WORK INDICATED ON THE PLANS THAT EXTENDS BEYOND THE PROJECT LIMITS IS CONSIDERED INCIDENTAL TO AND A PART OF THE CONSTRUCTION OF THIS PROJECT.

2. ALL BEARING BASED ON STATE PLANE COORDINATES MISSOURI WESTERN ZONE.

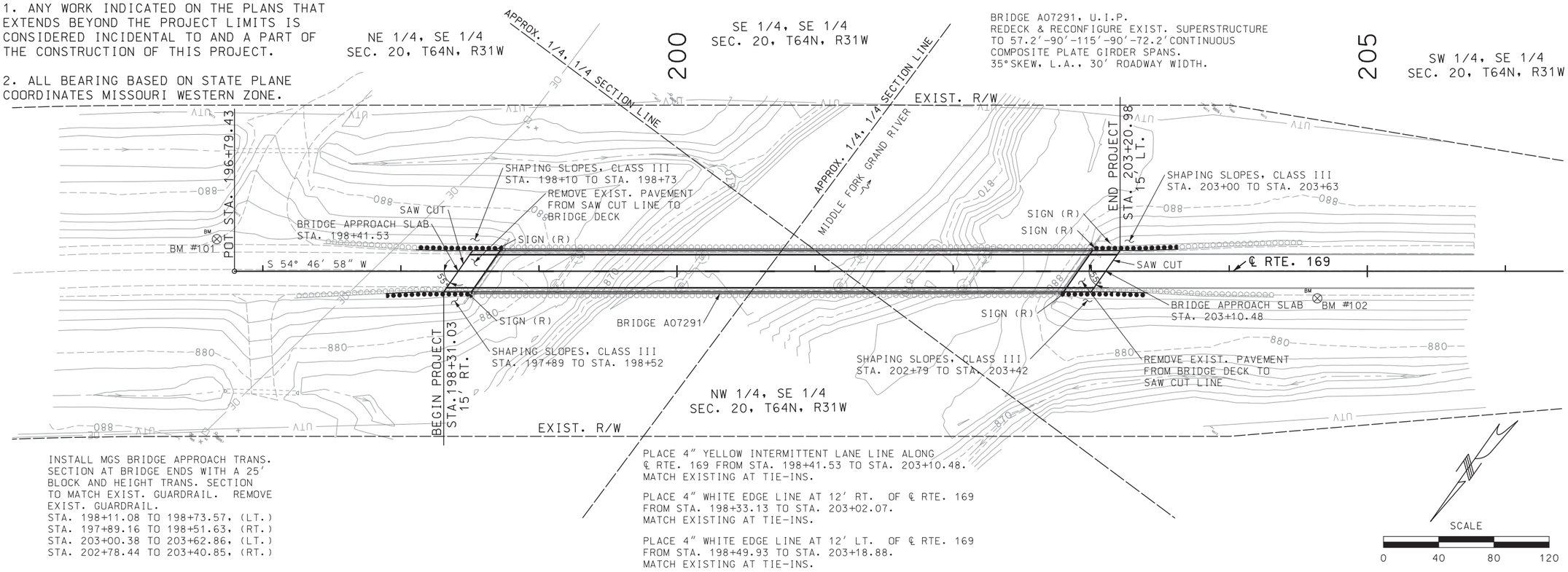

INSTALL MGS BRIDGE APPROACH TRANS. SECTION AT BRIDGE ENDS WITH A 25' BLOCK AND HEIGHT TRANS. SECTION TO MATCH EXIST. GUARDRAIL. REMOVE EXIST. GUARDRAIL.
STA. 198+11.08 TO 198+73.57, (LT.)
STA. 197+89.16 TO 198+51.63, (RT.)
STA. 203+00.38 TO 203+62.86, (LT.)
STA. 202+78.44 TO 203+40.85, (RT.)

PLACE 4" YELLOW INTERMITTENT LANE LINE ALONG ℄ RTE. 169 FROM STA. 198+41.53 TO STA. 203+10.48. MATCH EXISTING AT TIE-INS.

PLACE 4" WHITE EDGE LINE AT 12' RT. OF ℄ RTE. 169 FROM STA. 198+33.13 TO STA. 203+02.07. MATCH EXISTING AT TIE-INS.

PLACE 4" WHITE EDGE LINE AT 12' LT. OF ℄ RTE. 169 FROM STA. 198+49.93 TO STA. 203+18.88. MATCH EXISTING AT TIE-INS.

BM #101
SET 1/2" REBAR WITH YELLOW PLASTIC CAP STAMPED "CONTROL POINT" ON THE NORTH SIDE OF THE BRIDGE OVER THE MIDDLE FORK GRAND RIVER AND THE EAST SIDE OF ROUTE 169, NORTH OF THE INTERSECTION OF ROUTE 169 AND 270 ST. (GRAVEL ROAD), APPROX. 22' EAST OF THE CENTERLINE OF THE HIGHWAY, AND APPROX. 33' NORTH OF THE CENTERLINE OF THE GRAVEL ROAD (270 ST.).
ELEVATION = 888.57'

BM #102
SET 1/2" REBAR WITH YELLOW PLASTIC CAP STAMPED "CONTROL POINT" ON THE SOUTH SIDE OF THE BRIDGE OVER THE MIDDLE FORK GRAND RIVER AND THE WEST SIDE OF ROUTE 169, APPROX. 7' WEST OF THE CENTERLINE OF THE HIGHWAY, AND APPROX. 185' SOUTH OF THE SOUTHWESTERN END OF THE BRIDGE.
ELEVATION = 888.18'

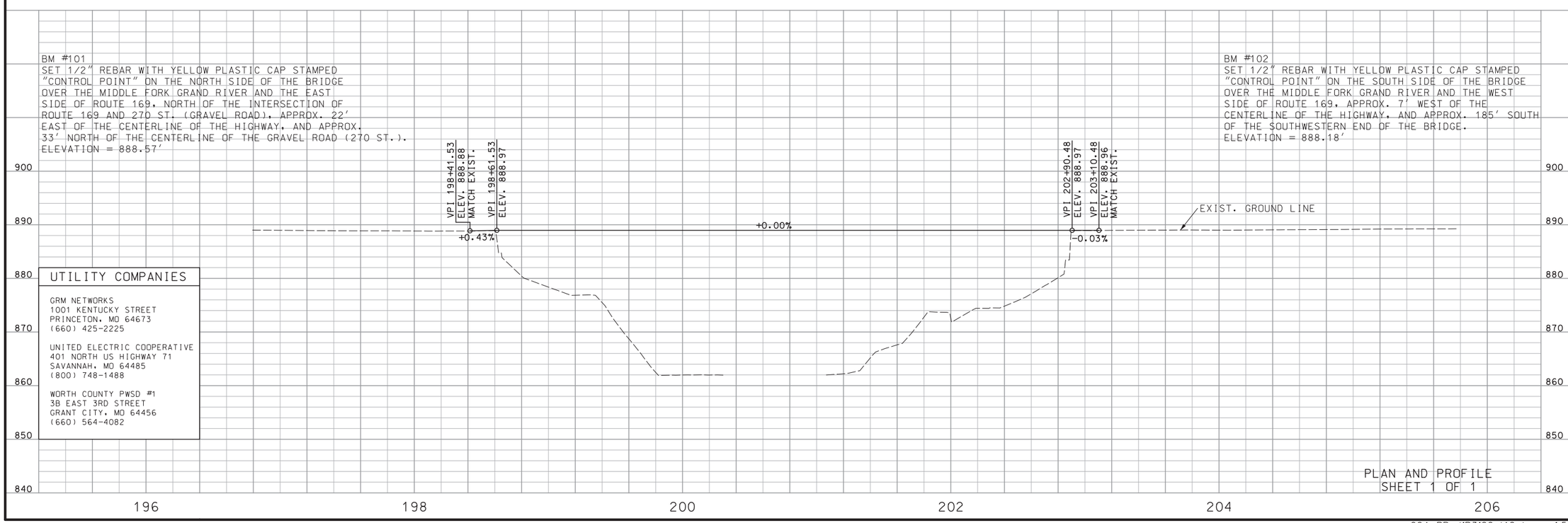

UTILITY COMPANIES

GRM NETWORKS
1001 KENTUCKY STREET
PRINCETON, MO 64673
(660) 425-2225

UNITED ELECTRIC COOPERATIVE
401 NORTH US HIGHWAY 71
SAVANNAH, MO 64485
(800) 748-1488

WORTH COUNTY PWSD #1
3B EAST 3RD STREET
GRANT CITY, MO 64456
(660) 564-4082

PLAN AND PROFILE
SHEET 1 OF 1

STATE OF MISSOURI
LISA BELLE MOSLEY
NUMBER PE-2004005376
PROFESSIONAL ENGINEER

THIS SHEET HAS BEEN SIGNED, SEALED AND DATED ELECTRONICALLY.

DATE PREPARED	
07/17/2020	
ROUTE 169	STATE MO
DISTRICT NW	SHEET NO. 4
COUNTY GENTRY	
JOB NO. J1P3106	
CONTRACT ID.	
PROJECT NO.	
BRIDGE NO.	

DATE	DESCRIPTION

IF A SEAL IS PRESENT ON THIS SHEET IT HAS BEEN ELECTRONICALLY SEALED AND DATED.

MISSOURI HIGHWAYS AND TRANSPORTATION COMMISSION
105 WEST CAPITOL
JEFFERSON CITY, MO 65102
1-888-ASK-MODOT (1-888-275-6636)

HNTB
715 KIRK DRIVE
KANSAS CITY, MO 64105-1310
TELEPHONE (816) 472-1201
CERTIFICATE OF AUTHORITY
NO. 001270

REV.

004_PP_J1P3106_I40.dgn 1:58:36 PM 7/15/2020

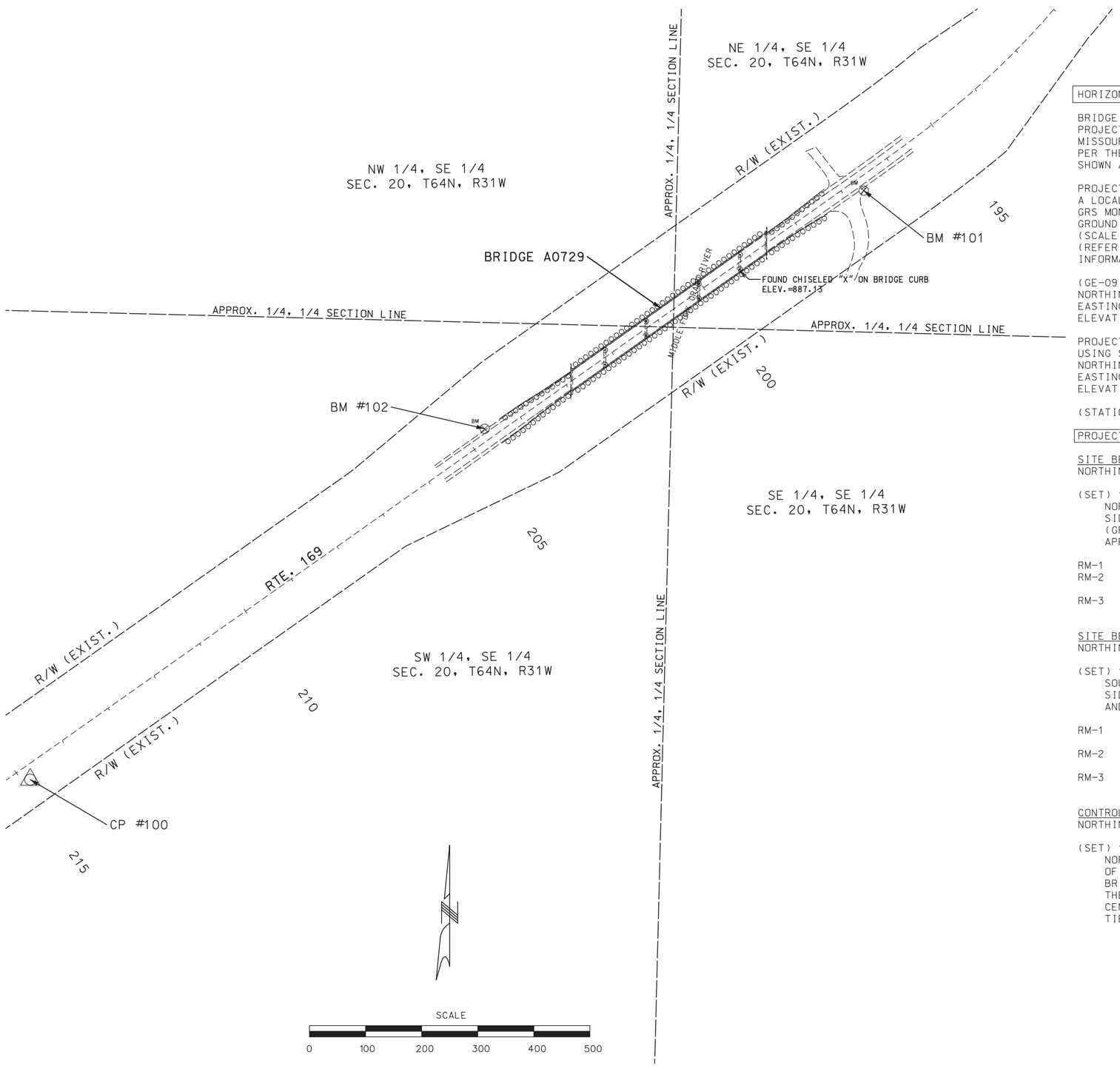

HORIZONTAL & VERTICAL CONTROL REFERENCE MONUMENT INFORMATION

BRIDGE A0729 ROUTE 169 OVER MIDDLE FORK GRAND RIVER (GENTRY COUNTY)
PROJECT COORDINATES SHOWN HEREON ARE BASED ON GRID NORTH OF THE MISSOURI STATE PLANE COORDINATE SYSTEM, WESTERN ZONE, NAD-83, NAVD-88 PER THE 12A GEOID AND MODIFIED TO STATE PLANE (GROUND). ALL COORDINATES SHOWN ARE IN U.S. SURVEY FEET.

PROJECT COORDINATES WERE ESTABLISHED FROM GPS OBSERVATION BY UTILIZING A LOCAL GPS BASE STATION AND DOING A SINGLE POINT LOCALIZATION TO MoDNR GRS MONUMENT DESIGNATED "GE-09"(PID 075009), AND MODIFIED TO STATE PLANE GROUND COORDINATES USING THE PUBLISHED COMBINED GRID FACTOR OF 0.9998967 (SCALE FACTOR=1.000103311) BY SCALING ABOUT A BASE POINT OF 0,0,0. (REFER TO MISSOURI GEOGRAPHIC REFERENCE SYSTEM SHEET FOR ADDITIONAL INFORMATION AND LOCATION.)

(GE-09) MoDNR PUBLISHED GRID COORDINATES (m), CONVERTED TO U.S. SURVEY FOOT.
NORTHING (GRID) = 458652.782(m) = 1504763.335′
EASTING (GRID) = 852343.544(m) = 2796397.112′
ELEVATION = 315.7(m) = 1038.135′

PROJECT COORDINATES FOR (GE-09) MODIFIED TO GROUND ABOUT BASE POINT 0,0,0
USING SAID GRID FACTOR OF 0.9998967 (SCALE FACTOR=1.000103311)
NORTHING (PROJECT GROUND) = 1504918.79′
EASTING (PROJECT GROUND) = 2796686.01′
ELEVATION = 1038.135′

(STATION IS LOCATED APPROXIMATELY 4 MILES SOUTHWEST OF PROJECT SITE.)

PROJECT SITE CONTROL

SITE BENCHMARK & CONTROL PT. #101 (HORIZONTAL & VERTICAL)
NORTHING = 1517469.67 / EASTING = 2814197.61 / ELEVATION = 888.57

(SET) 1/29" REBAR WITH YELLOW PLASTIC CAP STAMPED "CONTROL POINT" ON THE NORTH SIDE OF THE BRIDGE OVER THE MIDDLE FORK GRAND RIVER AND THE EAST SIDE OF ROUTE 169, NORTH OF THE INTERSECTION OF ROUTE 169 AND 270 ST. (GRAVEL ROAD), APPROX. 225′ EAST OF THE CENTERLINE OF THE HIGHWAY, AND APPROX. 335′ NORTH OF THE CENTERLINE OF THE GRAVEL ROAD (270 ST.).

RM-1 S05°E, 25.45′ TO A STOP/STREET SIGN.
RM-2 S57°W, 77.35′ TO THE NORTHERN END OF A STEEL GUARDRAIL ON THE EAST SIDE OF THE HIGHWAY.
RM-3 N88°W, 70.6 TO THE NORTHERN END OF A STEEL GUARDRAIL ON THE WEST SIDE OF THE HIGHWAY.

SITE BENCHMARK & CONTROL PT. #102 (HORIZONTAL & VERTICAL)
NORTHING = 1517045.03 / EASTING = 2813521.63 / ELEVATION = 888.18

(SET) 1/2" REBAR WITH YELLOW PLASTIC CAP STAMPED "CONTROL POINT" ON THE SOUTH SIDE OF THE BRIDGE OVER THE MIDDLE FORK GRAND RIVER AND THE WEST SIDE OF ROUTE 169, APPROX. 75′ WEST OF THE CENTERLINE OF THE HIGHWAY, AND APPROX. 1855′ SOUTH OF THE SOUTHWESTERN END OF THE BRIDGE.

RM-1 N56°E, 31.65′ TO THE SOUTHERN END OF A STEEL GUARDRAIL ON THE WEST SIDE OF THE HIGHWAY.
RM-2 N56°E, 1825′ TO A YELLOW/BLACK CAUTION SIGN ON THE S.W. SIDE OF THE BRIDGE.
RM-3 S70°E, 1555′ TO A MIDDLE FORK GRAND RIVER SIGN ON THE EAST SIDE OF HIGHWAY.

CONTROL PT. #100 (HORIZONTAL ONLY)
NORTHING = 1516419.44 / EASTING = 2812711.16

(SET) 1/2" REBAR WITH YELLOW PLASTIC CAP STAMPED "CONTROL POINT" ON THE NORTHERN SIDE OF A GRAVEL/DIRT FIELD ENTRANCE LOCATED ON THE EAST SIDE OF ROUTE 169, APPROXIMATELY 12005′ SOUTH OF THE SOUTHERN END OF THE BRIDGE DECK OVER THE MIDDLE FORK GRAND RIVER, APPROX. 5.85′ EAST OF THE EASTERN EDGE OF ASPHALT PAVEMENT AND APPROX. 125′ NORTH OF THE CENTERLINE OF THE FIELD ENTRANCE. (NO PHYSICAL OBJECTS FOR REFERENCE TIES EXIST AT THIS LOCATION.)

REFERENCE POINTS
SHEET 1 OF 1

STATE OF MISSOURI
LISA BELLE MOSLEY
NUMBER PE-2004005376
PROFESSIONAL ENGINEER

THIS SHEET HAS BEEN SIGNED, SEALED AND DATED ELECTRONICALLY.

DATE PREPARED	
07/17/2020	
ROUTE 169	STATE MO
DISTRICT NW	SHEET NO. 5
COUNTY GENTRY	
JOB NO. J1P3106	
CONTRACT ID.	
PROJECT NO.	
BRIDGE NO.	

DATE	DESCRIPTION

IF A SEAL IS PRESENT ON THIS SHEET IT HAS BEEN ELECTRONICALLY SEALED AND DATED.

MISSOURI HIGHWAYS AND TRANSPORTATION COMMISSION
105 WEST CAPITOL
JEFFERSON CITY, MO 65102
1-888-ASK-MODOT (1-888-275-6636)

HNTB
715 KIRK DRIVE
KANSAS CITY, MO 64105-1310
TELEPHONE (816) 472-1201
CERTIFICATE OF AUTHORITY
NO. 001270

REV.

005_RP_J1P3106_I100.dgn 9:02:42 AM 7/13/2020

COORDINATE POINT LISTING - MISSOURI COORDINATE SYSTEM OF 1983

SHEET NO	STATION	LOCATION	✳ OFFSET (FEET)	MODIFIED STATE PLANE (GROUND) NORTHING (FEET)	EASTING (FEET)	ELEVATION	STATE PLANE ZONE	DESCRIPTION	GPK POINT ID	VERTICAL	GEOID MODEL
TIES (HORIZONTAL AND VERTICAL)											
5	4 MILES S.W. OF PROJECT SITE			1504918.79	2796686.01	1038.13	2403 MO-WEST	MoDNR GRS MONUMENT	GE-09	NAVD-88	12A GEOID
5	196+66.69	RTE. 169	23.0	1517469.67	2814197.61	888.57	2403 MO-WEST	HORIZONTAL AND VERTICAL CONTROL	BM #101	NAVD-88	12A GEOID
5	204+63.82	RTE. 169	19.7	1517045.03	2813521.63	888.18	2403 MO-WEST	HORIZONTAL AND VERTICAL CONTROL	BM #102	NAVD-88	12A GEOID
5	214+86.72	RTE. 169	23.8	1516419.44	2812711.16	--	2403 MO-WEST	HORIZONTAL CONTROL	CP #100	NAVD-88	12A GEOID
ALIGNMENT (ROUTE 169)											
4	196+79.43	RTE. 169	0	1517481.31	2814173.79	--	2403 MO-WEST	POINT OF BEGINNING	POB	NAVD-88	12A GEOID
4	210+00.00	RTE. 169	0	1516719.77	2813094.93	--	2403 MO-WEST	POINT OF ENDING	POE	NAVD-88	12A GEOID
✳ GROUND DISTANCE											

NOTE: GRID FACTOR = 0.9998967 (SCALE FACTOR = 1.000103311)

COORDINATE POINTS
SHEET 1 OF 1

STATE OF MISSOURI
LISA BELLE MOSLEY
NUMBER PE-2004005376
PROFESSIONAL ENGINEER

THIS SHEET HAS BEEN SIGNED, SEALED AND DATED ELECTRONICALLY.

DATE PREPARED	
07/17/2020	
ROUTE 169	STATE MO
DISTRICT NW	SHEET NO. 6
COUNTY GENTRY	
JOB NO. J1P3106	
CONTRACT ID.	
PROJECT NO.	
BRIDGE NO.	

DATE	DESCRIPTION

IF A SEAL IS PRESENT ON THIS SHEET IT HAS BEEN ELECTRONICALLY SEALED AND DATED.

MISSOURI HIGHWAYS AND TRANSPORTATION COMMISSION
105 WEST CAPITOL
JEFFERSON CITY, MO 65102
1-888-ASK-MODOT (1-888-275-6636)

HNTB
715 KIRK DRIVE
KANSAS CITY, MO 64105-1310
TELEPHONE (816) 472-1201
CERTIFICATE OF AUTHORITY
NO. 001270

REV.

006_CP_J1P3106_l1.dgn 9:02:42 AM 7/13/2020

NOTE:
REFER TO MODOT EPG 616.8.8 (TA-8) FOR "HIGHWAY CLOSURE" FOR SIGN SPACING AND ADDITIONAL DETAILS.
REFER TO MODOT EPG TA-9 FOR "ROAD CLOSED BEYOND JUNCTION" FOR ROUTE ASSEMBLY SIGN DETAILS.

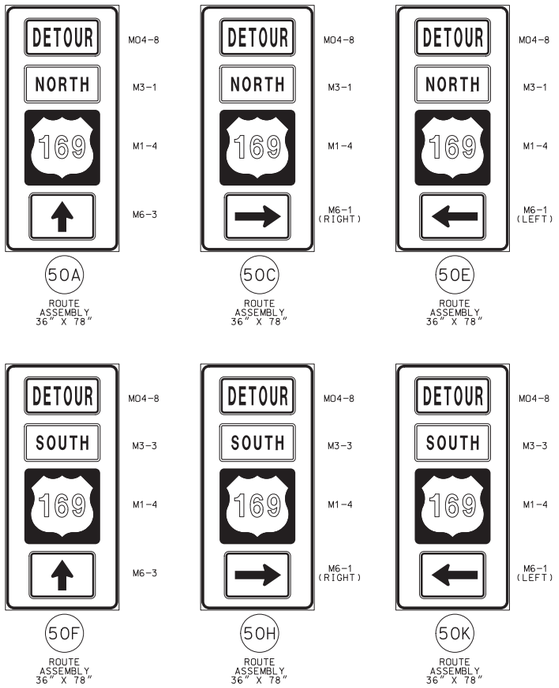

W020-3
20

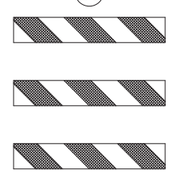

INSTALL ADVANCED WARNING RAIL SYSTEM (AWRS) WITH ROAD CLOSED AHEAD SIGN.

M04-8a
52

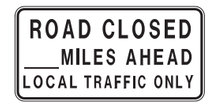

R11-3a
55

SEE TRAFFIC CONTROL PLANS FOR MILES AHEAD.

R11-2
29

W020-2
18

W020-3
20A

SPECIAL SIGN
56A

SPECIAL SIGN
56B

TRAFFIC CONTROL LEGEND

- SIGN (SINGLE SIDED)
- BARRICADE
- DIRECTION OF DETOUR TRAFFIC
- CHANGEABLE MESSAGE BOARD

LEGEND AND NOTES
TEMPORARY TRAFFIC CONTROL
SHEET 1 OF 4

STATE OF MISSOURI
LISA BELLE MOSLEY
NUMBER PE-2004005376
PROFESSIONAL ENGINEER

THIS SHEET HAS BEEN SIGNED, SEALED AND DATED ELECTRONICALLY.

DATE PREPARED	
07/17/2020	
ROUTE 169	STATE MO
DISTRICT NW	SHEET NO. 7
COUNTY GENTRY	
JOB NO. J1P3106	
CONTRACT ID.	
PROJECT NO.	
BRIDGE NO.	

DATE	DESCRIPTION

IF A SEAL IS PRESENT ON THIS SHEET IT HAS BEEN ELECTRONICALLY SEALED AND DATED.

MISSOURI HIGHWAYS AND TRANSPORTATION COMMISSION
105 WEST CAPITOL
JEFFERSON CITY, MO 65102
1-888-ASK-MODOT (1-888-275-6636)

HNTB
715 KIRK DRIVE
KANSAS CITY, MO 64105-1310
TELEPHONE (816) 472-1201
CERTIFICATE OF AUTHORITY
NO. 001270

REV.

007_TC_01_J1P3106_I1000.dgn 9:02:43 AM 7/13/2020

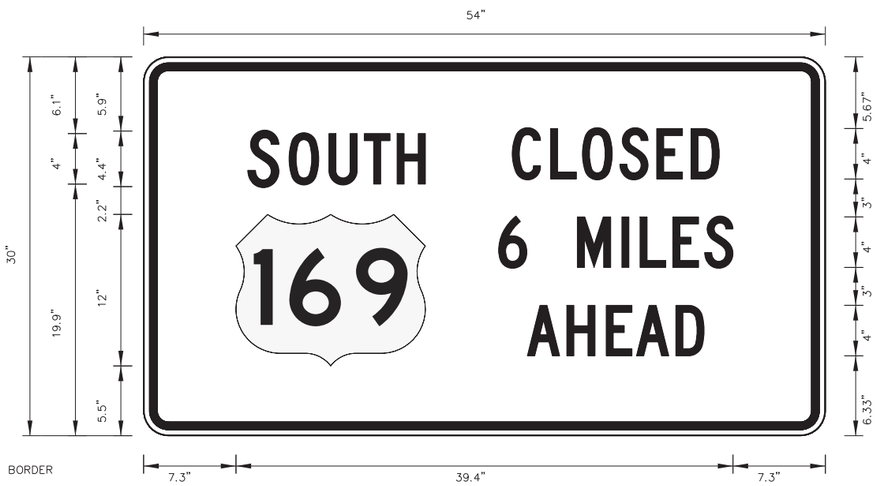

BORDER
R=1.5"
TH=0.63"
IN=0.47"

SIGN NUMBER	MISC SIGN #56A, SOUTH US 169
WIDTH x HGHT.	4'-6" x 2'-6"
BORDER WIDTH	0.63"
CORNER RADIUS	1.5"
MOUNTING	GROUND
BACKGROUND	TYPE: REFLECTIVE
	COLOR: ORANGE
LEGEND/BORDER	TYPE: REFLECTIVE
	COLOR: Black/Black

SYMBOL	ROT	X	Y	WID	HT
M1_4	0	7.3	5.5	15	12

DIMENSIONS ARE IN INCHES.TENTHS
LETTER SPACINGS ARE TO START OF NEXT LETTER

LETTER POSITIONS (X)										LENGTH	SERIES/SIZE
	S		O	U	T	H					C 2000
8.3	2.5	0.8	3.2	2.8	2.6	2.2	31.7			14.1	4.4
	C	L	O	S	E	D					C 2000
29.2	3	2.5	3	2.9	2.7	2.2	8.4			16.4	4
	6		M	I	L	E	S				C 2000
28.1	2.2	4	3.5	1.4	2.6	2.5	2.2	7.3		18.6	4
	A	H	E	A	D						C 2000
30.4	3.1	3.1	2.4	3.1	2.2	9.6				14	4

BORDER
R=1.5"
TH=0.63"
IN=0.47"

SIGN NUMBER	MISC SIGN #56B, NORTH US 169
WIDTH x HGHT.	4'-0" x 2'-6"
BORDER WIDTH	0.63"
CORNER RADIUS	1.5"
MOUNTING	GROUND
BACKGROUND	TYPE: REFLECTIVE
	COLOR: ORANGE
LEGEND/BORDER	TYPE: REFLECTIVE
	COLOR: Black/Black

SYMBOL	ROT	X	Y	WID	HT
M1_4	0	4.7	5.5	15	12

DIMENSIONS ARE IN INCHES.TENTHS
LETTER SPACINGS ARE TO START OF NEXT LETTER

LETTER POSITIONS (X)										LENGTH	SERIES/SIZE
	N		O	R	T	H					C 2000
5.3	2.5	0.8	3.2	2.6	2.6	2.2	28.9			13.9	4.4
	C	L	O	S	E	D					C 2000
26.9	3	2.5	3	2.9	2.7	2.2	4.7			16.4	4
	1		M	I	L	E					C 2000
27.9	0.8	4	3.5	1.4	2.6	2	5.7			14.4	4
	A	H	E	A	D						C 2000
28.1	3.1	3.1	2.4	3.1	2.2	5.9				14	4

SPECIAL SIGNS
TEMPORARY TRAFFIC CONTROL
SHEET 2 OF 4

STATE OF MISSOURI
LISA BELLE MOSLEY
NUMBER PE-2004005376
PROFESSIONAL ENGINEER

THIS SHEET HAS BEEN SIGNED, SEALED AND DATED ELECTRONICALLY.

DATE PREPARED	07/17/2020
ROUTE 169	STATE MO
DISTRICT NW	SHEET NO. 8
COUNTY	GENTRY
JOB NO.	J1P3106
CONTRACT ID.	
PROJECT NO.	
BRIDGE NO.	

DATE	DESCRIPTION

IF A SEAL IS PRESENT ON THIS SHEET IT HAS BEEN ELECTRONICALLY SEALED AND DATED.

MISSOURI HIGHWAYS AND TRANSPORTATION COMMISSION
105 WEST CAPITOL
JEFFERSON CITY, MO 65102
1-888-ASK-MODOT (1-888-275-6636)

HNTB
715 KIRK DRIVE
KANSAS CITY, MO 64105-1310
TELEPHONE (816) 472-1201
CERTIFICATE OF AUTHORITY
NO. 001270

REV.

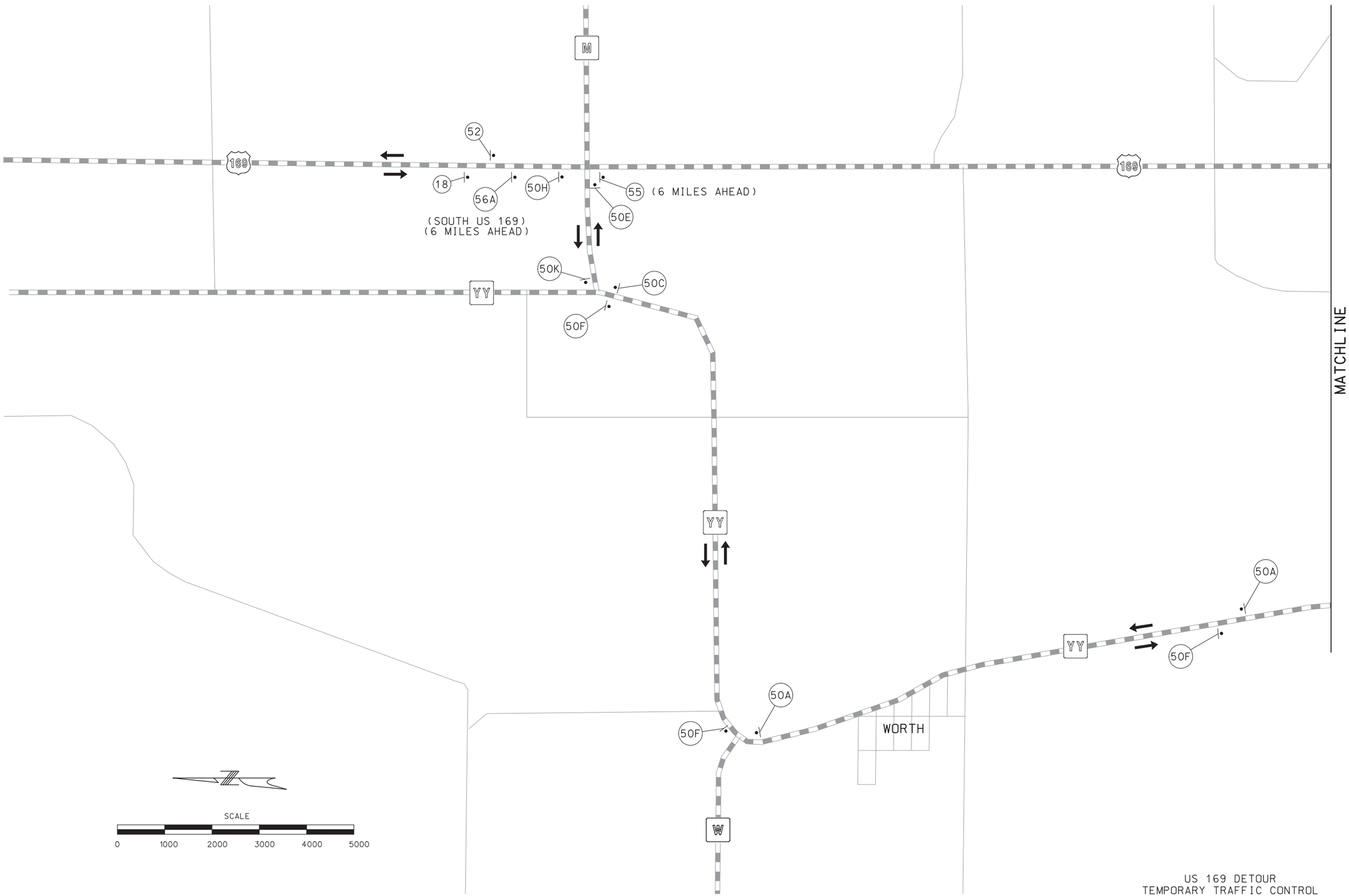

MATCHLINE

US 169 DETOUR
TEMPORARY TRAFFIC CONTROL
SHEET 3 OF 4

STATE OF MISSOURI
LISA BELLE MOSLEY
NUMBER PE-2004005376
PROFESSIONAL ENGINEER

THIS SHEET HAS BEEN SIGNED, SEALED AND DATED ELECTRONICALLY.

DATE PREPARED	
07/17/2020	
ROUTE	STATE
169	MO
DISTRICT	SHEET NO.
NW	9
COUNTY	
GENTRY	
JOB NO.	
J1P3106	
CONTRACT ID.	
PROJECT NO.	
BRIDGE NO.	

DATE	DESCRIPTION

IF A SEAL IS PRESENT ON THIS SHEET IT HAS BEEN ELECTRONICALLY SEALED AND DATED.

MISSOURI HIGHWAYS AND TRANSPORTATION COMMISSION
105 WEST CAPITOL
JEFFERSON CITY, MO 65102
1-888-ASK-MODOT (1-888-275-6636)

HNTB
715 KIRK DRIVE
KANSAS CITY, MO 64105-1310
TELEPHONE (816) 472-1201
CERTIFICATE OF AUTHORITY
NO. 001270

REV.

009_TC_03_J1P3106_I1000.dgn 9:02:52 AM 7/13/2020

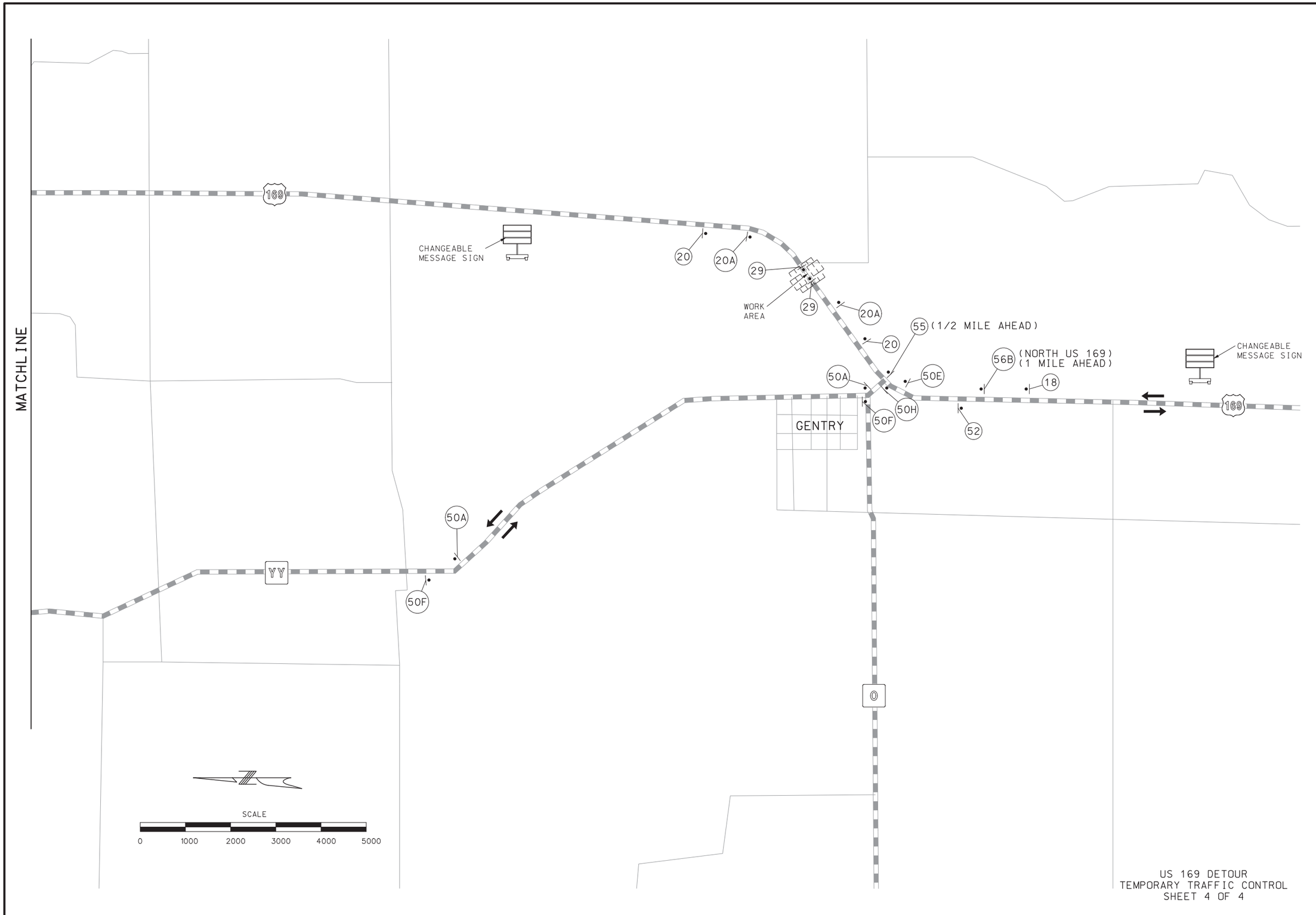

US 169 DETOUR
TEMPORARY TRAFFIC CONTROL
SHEET 4 OF 4

STATE OF MISSOURI
LISA BELLE MOSLEY
NUMBER PE-2004005376
PROFESSIONAL ENGINEER

THIS SHEET HAS BEEN SIGNED, SEALED AND DATED ELECTRONICALLY.

DATE PREPARED	
07/17/2020	
ROUTE 169	STATE MO
DISTRICT NW	SHEET NO. 10
COUNTY GENTRY	
JOB NO. J1P3106	
CONTRACT ID.	
PROJECT NO.	
BRIDGE NO.	

DATE	DESCRIPTION

IF A SEAL IS PRESENT ON THIS SHEET IT HAS BEEN ELECTRONICALLY SEALED AND DATED.

MISSOURI HIGHWAYS AND TRANSPORTATION COMMISSION
105 WEST CAPITOL
JEFFERSON CITY, MO 65102
1-888-ASK-MODOT (1-888-275-6636)

HNTB
715 KIRK DRIVE
KANSAS CITY, MO 64105-1310
TELEPHONE (816) 472-1201
CERTIFICATE OF AUTHORITY
NO. 001270

REV.

010_TC_04_J1P3106_I1000.dgn 9:02:52 AM 7/13/2020

SEC/SUR 20 TWP 64N RGE 31W

U.I.P., REDECK & RECONFIGURE EXISTING SUPERSTRUCTURE TO (57.2′– 90.0′– 115.0′– 90.0′– 72.2′) CONTINUOUS COMPOSITE PLATE GIRDER SPANS (SKEW: 35° L.A.)

GENERAL NOTES:

Design Specifications:
2002 AASHTO LFD (17th Ed.) Standard Specifications

Design Loading:
H20-44 (AASHO 1957)(Existing)
HS20-44 (New Construction)
Fatigue Stress-Case II
15#/Sq. Ft. Future Wearing Surface

Design Unit Stresses:
Structural Steel (ASTM A709 Grade 50) fy = 50,000 psi

Class B-2 Concrete (Slab Replacement) f′c = 4,000 psi

Class B-1 Concrete (Type B Barrier and Substructure Repair (Formed)) f′c = 4,000 psi

Reinforcing Steel (Grade 60) fy = 60,000 psi

Neoprene Pads:
Laminated Neoprene Bearing Pads shall be 60 durometer and shall be in accordance with Sec 716.

Fabricated Steel Connections:
Field connections shall be made with 3/4″ diameter high strength bolts and 13/16″ diameter holes, except as noted.

High strength bolts, nuts and washers will be sampled for quality assurance as specified in Sec. 106.

Joint Filler:
All joint filler shall be in accordance with Sec 1057 for preformed sponge rubber expansion and partition joint filler, except as noted.

Reinforcing Steel:
Minimum clearance to reinforcing steel shall be 1-1/2″, unless otherwise shown.
Bars bonded in existing concrete not removed shall be cleanly stripped and embedded into new concrete where possible. If length is available, existing bars shall extend into new concrete as least 40 diameters for plain bars and 30 diameters for deformed bars, unless otherwise shown.

Traffic Handling:
Structure to be closed during construction.

Structural Steel Protective Coatings:
Protective Coating: System G in accordance with Sec 1081.

Surface Preparation: Surface preparation of the existing fascia steel shall be in accordance with Sec 1081 for Recoating of Structural Steel (System G). The cost of surface preparation will be considered completely covered by the contract unit price per sq. foot for Surface Preparation for Recoating Structural Steel.

Prime Coat for New Steel: The cost of the prime coat will be considered completely covered by the contract unit price for the fabricated structural steel. Tint of the prime coat for System G shall be similar to the color of the field coat to be used.

Prime Coat for Existing Steel: The cost of the prime coat will be considered completely covered by the contract unit price per sq. foot for Field Application of Inorganic Zinc Primer. Tint of the prime coat for System G shall be similar to the color of the field coat to be used.

Field Coat:
The color of the field coats shall be Gray (Federal Standard #26373).

The cost of intermediate field coat will be considered completely covered by the contract unit price per sq. foot for Intermediate Field Coat (System G). The cost of the finish field coat will be considered completely covered by the contract unit price per sq. foot for Finish Field Coat (System G).

At the option of the contractor, the intermediate and finish field coats may be applied in the shop. The contractor shall exercise extreme care during all phases of loading, hauling, handling, erection, and pouring of the slab to minimize damage, and shall be fully responsible for all repairs and cleaning of the coating systems as required by the engineer.

Concrete Protective Coating:
Protective coating for concrete bents and piers (Epoxy) shall be applied as shown on the bridge plans and in accordance with Sec 711.

Miscellaneous:
Contractor shall verify all dimensions in field before ordering new material.

Outline of old work is indicated by light dashed lines. Heavy lines indicate new work.

Cost of any required excavation for bridge will be considered completely covered by the contract unit price for other items.

Abbreviations:
E.F. denotes Each Face.
N.F. denotes Near Face.
F.F. denotes Far Face.
U.N.O. denotes Unless Noted Otherwise.
T.B.R. denotes To Be Removed.
T.R. denotes To Remain.
U.I.P. denotes Use In Place

ESTIMATED QUANTITIES

Item		Total
Removal of Existing Bridge Deck	sq. foot	13,549
Partial Remove of Existing Structural Steel	lump sum	1
Bridge Approach Slab (Minor Road)	sq. yd.	134
Slab on Steel	sq. yd.	1,557
✳ Type B Barrier	linear foot	858
Substructure Repair (Formed)	sq. foot	240
Epoxy Pressure Injecting	linear foot	33
Protective Coating-Concrete Bents & Piers (Epoxy)	lump sum	1
Fabricated Structural Low Alloy Steel (Misc.)	lb.	11,640
Fabricated Structural Low Alloy Steel (Plate Girder) A709, Grade 50	lb.	89,310
Slab Drain	each	74
Surface Preparation for Recoating Structural Steel	sq. foot	4,000
Field Application of Inorganic Zinc Primer	sq. foot	4,000
Intermediate Field Coat (System G)	sq. foot	1,800
Finish Field Coat (System G)	sq. foot	1,800
Gray Epoxy-Mastic Primer	lump sum	1
Laminated Neoprene Bearing Pad Assembly	each	16

✳ Type B Barrier shall be cast-in-place option or slip-form option.

ESTIMATED QUANTITIES FOR SLAB ON STEEL

Item		Total
Class B-2 Concrete	cu. yard	340.5
Reinforcing Steel (Epoxy Coated)	pound	115,210

The table of Estimated Quantities for Slab on Steel represents the quantities used by the State in preparing the cost estimate for concrete slabs. The area of the concrete slab will be measured to the nearest square yard longitudinally from end of slab to end of slab and transversely from out to out of bridge slab (or with the horizontal dimensions as shown on the plans of slab). Payment for optional stay-in-place corrugated steel form, conventional forms, all concrete and epoxy coated reinforcing steel will be ocnsidered completely covered by the contract unit price for the slab on steel. Variations may be encountered in the estimated quantities but the variations cannot be used for an adjustment in the contract unit price.

Method of forming the slab shall be as shown on the plans and in accordance with Sec 703. All hardware for forming the slab to be left in place as a permanent part of the structure shall be coated in accordance with ASTM A123 or ASTM B633 with a thickness class SC 4 and a finish type I, II or III.

Slab shall be cast-in-place with conventional forms or stay-in-place corrugated steel forms. Precast prestressed panels will not be permitted.

For Optional stay-in-place form details, see Sheet No. 13.

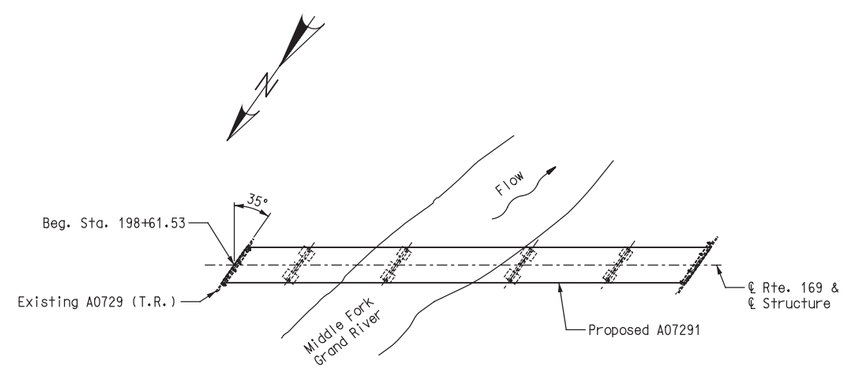

LOCATION SKETCH

REPAIRS TO BRIDGE OVER MIDDLE FORK OF GRAND RIVER

ROUTE 169 FROM ROUTE YY TO ROUTE M

ABOUT 0.5 MILES EAST OF ROUTE YY

STA. 198+61.53± (MATCH EXIST.)

STD. 617.10
STD. 706.35

Detailed MAY 2020
Checked JUN 2020

Note: This drawing is not to scale. Follow dimensions.

STATE OF MISSOURI
JEFFREY B. SMITH
NUMBER E-27175
REGISTERED PROFESSIONAL ENGINEER

THIS SHEET HAS BEEN SIGNED, SEALED, AND DATED ELECTRONICALLY.

DATE 07/17/2020
ROUTE 169 STATE MO
DISTRICT BR SHEET NO. 1
COUNTY GENTRY
JOB NO. J1P3106
CONTRACT ID.
PROJECT NO.
BRIDGE NO. A07291

DESCRIPTION | DATE

IF A SEAL IS PRESENT ON THIS SHEET IT HAS BEEN ELECTRONICALLY SEALED AND DATED.

MISSOURI HIGHWAYS AND TRANSPORTATION COMMISSION
105 WEST CAPITOL
JEFFERSON CITY, MO 65102
1-888-ASK-MODOT (1-888-275-6636)

HNTB
715 KIRK DRIVE
KANSAS CITY, MO 64105-1310
TELEPHONE (816) 472-1201
CERTIFICATE OF AUTHORITY NO. 001270

REV.

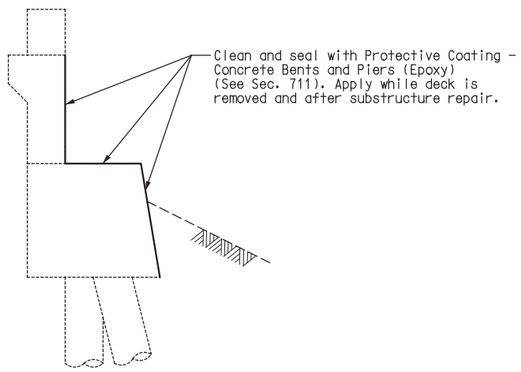

TYPICAL SECTION THRU
END BENTS NO. 1 & 6 SHOWING
PROTECTIVE COATING

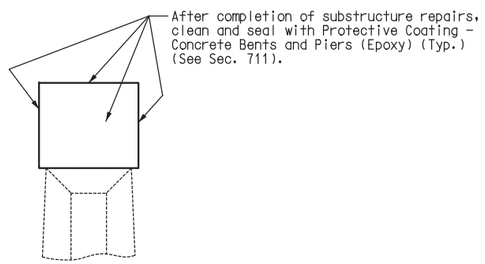

TYPICAL ELEVATION OF
INTERMEDIATE BENTS NO. 2 & 5
SHOWING PROTECTIVE COATING

(AFTER SUBSTRUCTURE REPAIRS)

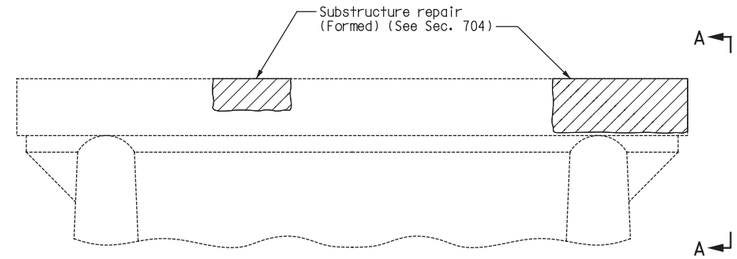

PART ELEVATION OF INT. BENT NO. 2
SHOWING SUBSTRUCTURE REPAIR

(Looking upstation)

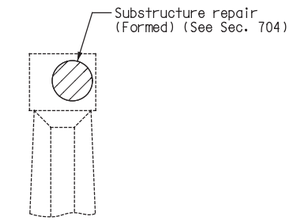

VIEW A–A

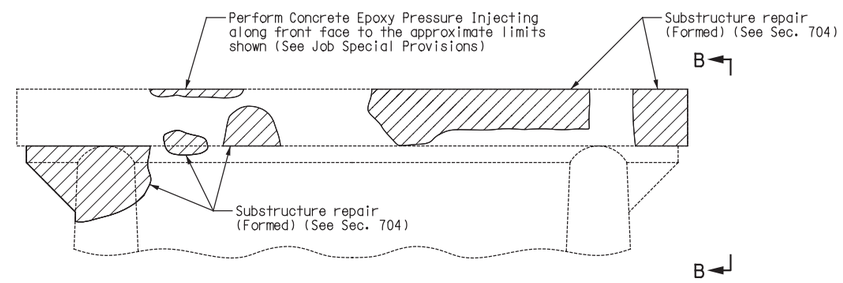

PART ELEVATION OF INT. BENT NO. 5
SHOWING SUBSTRUCTURE REPAIR

(Looking downstation)

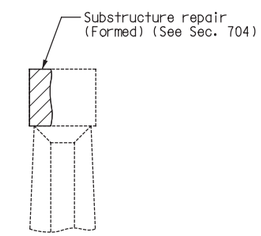

VIEW B–B

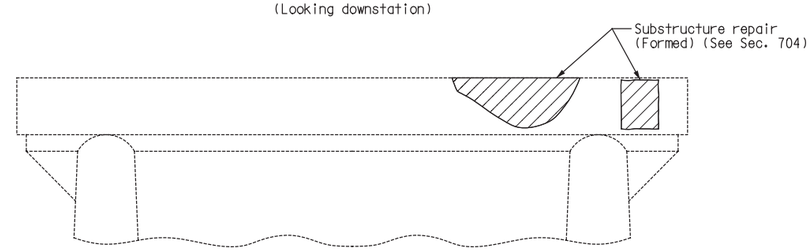

PART ELEVATION OF INT. BENT NO. 5
SHOWING SUBSTRUCTURE REPAIR

(Looking upstation)

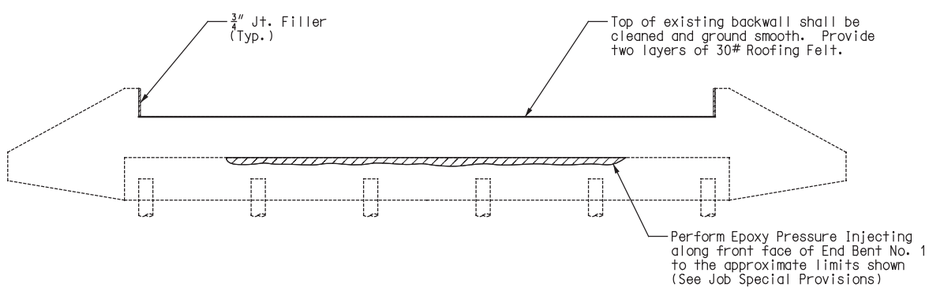

ELEVATION OF END BENT NO. 1
SHOWING SUBSTRUCTURE REPAIR

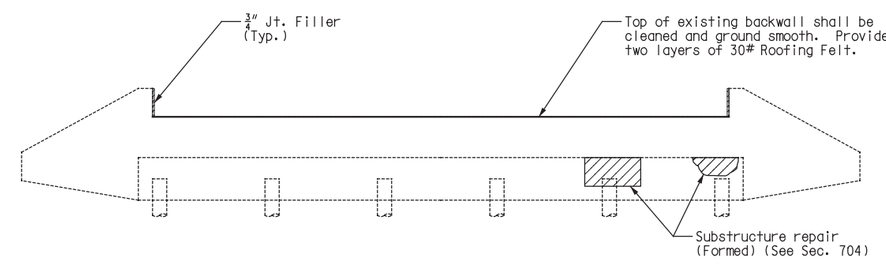

ELEVATION OF END BENT NO. 6
SHOWING SUBSTRUCTURE REPAIR

SUBSTRUCTURE REHAB DETAILS

Detailed MAY 2020
Checked MAY 2020

Note: This drawing is not to scale. Follow dimensions.

STATE OF MISSOURI
JEFFREY B. SMITH
NUMBER E-27175
REGISTERED PROFESSIONAL ENGINEER

THIS SHEET HAS BEEN SIGNED, SEALED, AND DATED ELECTRONICALLY.

DATE	
07/17/2020	
ROUTE 169	STATE MO
DISTRICT BR	SHEET NO. 2
COUNTY GENTRY	
JOB NO. J1P3106	
CONTRACT ID.	
PROJECT NO.	
BRIDGE NO. A07291	

DESCRIPTION	DATE

IF A SEAL IS PRESENT ON THIS SHEET IT HAS BEEN ELECTRONICALLY SEALED AND DATED.

MISSOURI HIGHWAYS AND TRANSPORTATION COMMISSION
105 WEST CAPITOL
JEFFERSON CITY, MO 65102
1-888-ASK-MODOT (1-888-275-6636)

HNTB
715 KIRK DRIVE
KANSAS CITY, MO 64105-1310
TELEPHONE (816) 472-1201
CERTIFICATE OF AUTHORITY
NO. 001270

REV.

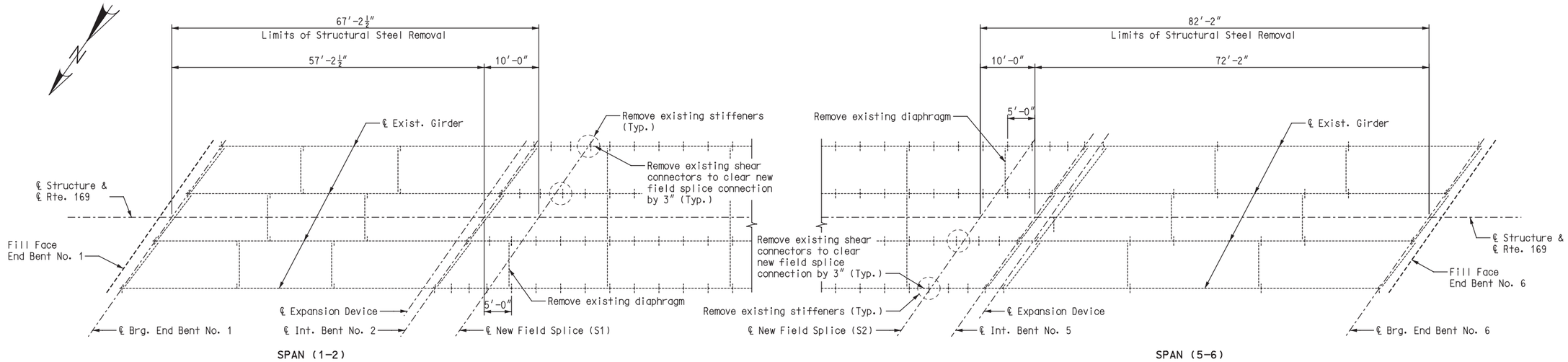

PART PLAN OF STRUCTURAL STEEL REMOVAL LIMITS

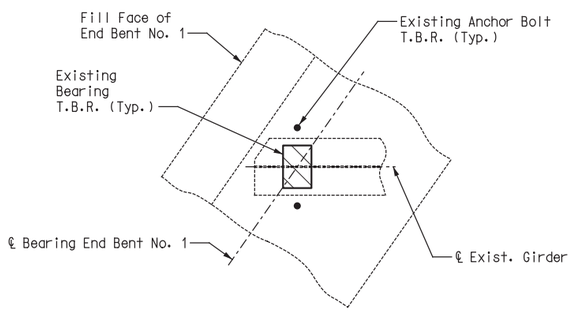

PART PLAN AT END BENT NO. 1

(End Bent No. 1 shown, End Bent No. 6 similar)

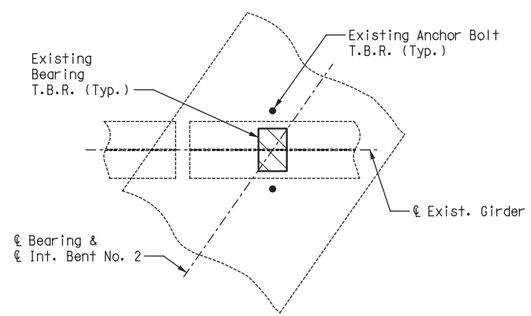

PART PLAN AT INT. BENT NO. 2

(Int. Bent No. 2 shown, Int. Bent No. 5 similar)

Note:

The contractor shall remove the existing bearings at the locations shown. The contractor shall also remove the existing anchor bolts to one inch below the concrete surface or to the extent required for installation of the new anchor bolts as required by the plans and as authorized by the engineer. The resultant hole shall be filled with an approved special mortar in accordance with Sec 704. This work will be considered completely covered by the contract unit price for Partial Remove of Existing Structural Steel.

STRUCTURAL STEEL REMOVAL DETAILS

Detailed MAY 2020
Checked MAY 2020

Note: This drawing is not to scale. Follow dimensions.

STATE OF MISSOURI
JEFFREY B. SMITH
NUMBER E-27175
REGISTERED PROFESSIONAL ENGINEER

THIS SHEET HAS BEEN SIGNED, SEALED, AND DATED ELECTRONICALLY.

DATE	
07/17/2020	
ROUTE 169	STATE MO
DISTRICT BR	SHEET NO. 3
COUNTY GENTRY	
JOB NO. J1P3106	
CONTRACT ID.	
PROJECT NO.	
BRIDGE NO. A07291	

DESCRIPTION	DATE

IF A SEAL IS PRESENT ON THIS SHEET IT HAS BEEN ELECTRONICALLY SEALED AND DATED.

MISSOURI HIGHWAYS AND TRANSPORTATION COMMISSION
105 WEST CAPITOL
JEFFERSON CITY, MO 65102
1-888-ASK-MODOT (1-888-275-6636)

HNTB
715 KIRK DRIVE
KANSAS CITY, MO 64105-1310
TELEPHONE (816) 472-1201
CERTIFICATE OF AUTHORITY
NO. 001270

REV.

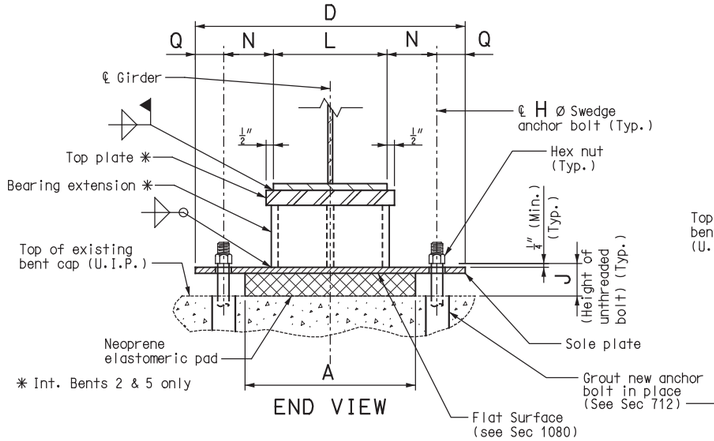

END VIEW

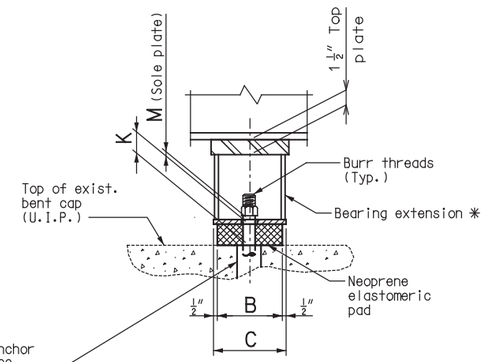

SIDE VIEW

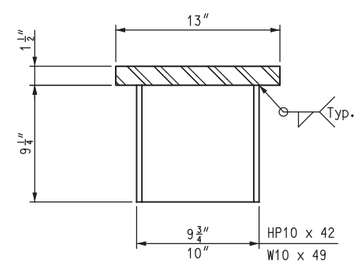

SIDE ELEVATION OF BEARING EXTENSION

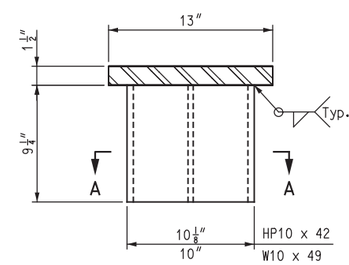

END ELEVATION OF BEARING EXTENSION

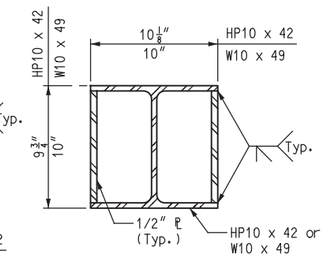

SECTION A-A

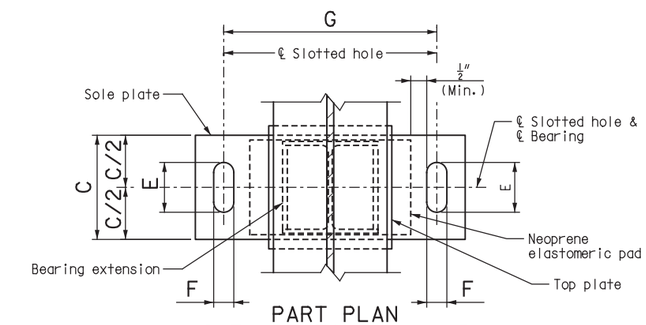

PART PLAN
INT. BENTS NO 2 & 5

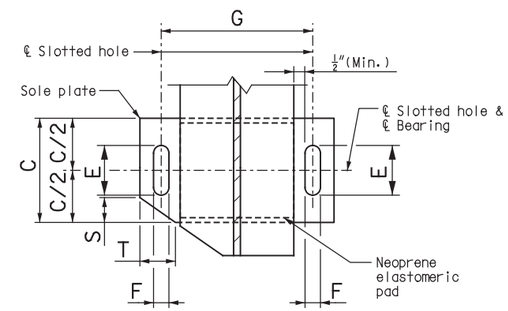

PART PLAN
END BENTS NO. 1 & 6

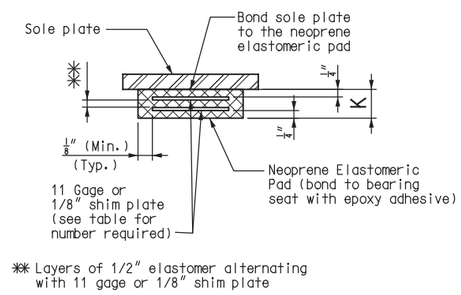

✳✳ Layers of 1/2" elastomer alternating with 11 gage or 1/8" shim plate

NEOPRENE ELASTOMERIC PAD

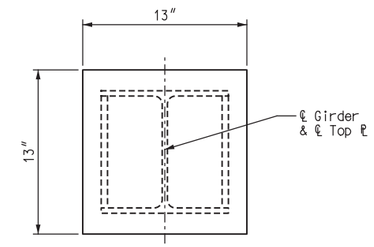

PLAN OF 1 1/2" TOP PLATE

EXPANSION BEARINGS																				
BENT NO.	A	B	C	D	E	F	G	H	J	K	L	M	N	P	Q	R	S	T	NUMBER OF SHIM PLATES ✳	NUMBER REQUIRED
1	12"	10"	11"	20 1/2"	5 1/4"	1 5/8"	16"	1 1/2"	5 5/8"	3 3/4"	12"	1 5/8"	2"	15"	2 1/4"	3/16"	2 5/8"	3 3/4"	6	4
2	18"	12"	13"	28 1/2"	5 1/2"	2 1/8"	22 1/2"	2"	4 7/8"	3 1/8"	12"	1 1/2"	5 1/4"	18"	3"	1/8"	--	--	5	4
5	18"	12"	13"	28 1/2"	5 1/2"	2 1/8"	22 1/2"	2"	4 7/8"	3 1/8"	12"	1 1/2"	5 1/4"	18"	3"	1/8"	--	--	5	4
6	12"	11"	12"	20 1/2"	5 1/4"	1 5/8"	16"	1 1/2"	5 5/8"	3 3/4"	12"	1 7/8"	2"	15"	2 1/4"	3/16"	2 1/2"	3 5/8"	6	4
																			TOTAL BEARINGS	16

✳ The required shim plate shall be placed between layers of elastomer and molded together to form an integral unit.

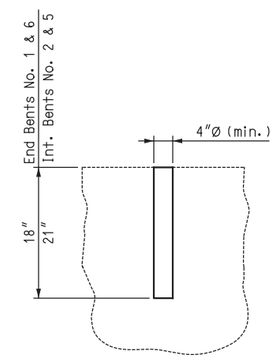

DETAIL OF ANCHOR BOLT WELL

Notes:

Anchor bolts shall be **H** Ø ASTM F1554 Grade 55 swedged bolts and shall extend **P** into the concrete with ASTM A563 Grade A Hex or Heavy Hex nuts. Actual manufacturer's certified mill test reports (chemical and mechanical) shall be provided. Swedging shall be 1" less than extension into the concrete.

Anchor bolt shall be at the ℄ of slotted hole at 60°F. Bearing position shall be adjusted **R** for each 10° fall or rise in temperature at installation.

All structural steel for the anchor bolts and heavy hexagon nuts shall be coated with a minimum of two coats of inorganic zinc primer (5 mils minimum).

Neoprene Elastomeric Pads shall be 60 Durometer.

Structural steel for sole plate and all bearing extension steel shall be ASTM A709 Grade 50 and shall be coated with a minimum of two coats of inorganic zinc primer (5 mils minimum).

Laminated Neoprene Bearing Pad Assembly shall be in accordance with Sec 716.

Cost of anchor bolts, drilling, grouting, and bearing extension, complete in place, will be considered completely covered by the contract unit price for Laminated Neoprene Bearing Pad Assembly.

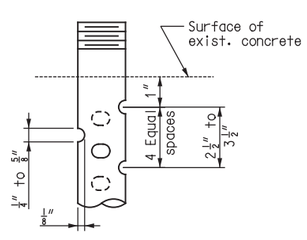

DETAIL OF 3/4"Ø THRU 2 1/2"Ø ANCHOR BOLTS

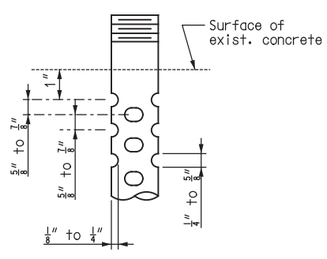

OPTIONAL DETAIL OF 1 3/8"Ø THRU 2 1/2"Ø ANCHOR BOLTS

SWEDGE ANCHOR BOLT DETAILS

DETAILS OF LAMINATED NEOPRENE BEARING PAD ASSEMBLY

Detailed MAY 2020
Checked MAY 2020

Note: This drawing is not to scale. Follow dimensions.

Sheet No. 4 of 18

STATE OF MISSOURI
JEFFREY B. SMITH
NUMBER E-27175
REGISTERED PROFESSIONAL ENGINEER

THIS SHEET HAS BEEN SIGNED, SEALED, AND DATED ELECTRONICALLY.

IF A SEAL IS PRESENT ON THIS SHEET IT HAS BEEN ELECTRONICALLY SEALED AND DATED.

DATE	STATE
07/17/2020	
ROUTE 169	STATE MO
DISTRICT BR	SHEET NO. 4

COUNTY: GENTRY
JOB NO. J1P3106
CONTRACT ID.
PROJECT NO.
BRIDGE NO. A07291

DATE	DESCRIPTION

MISSOURI HIGHWAYS AND TRANSPORTATION COMMISSION
105 WEST CAPITOL
JEFFERSON CITY, MO 65102
1-888-ASK-MODOT (1-888-275-6636)

HNTB
715 KIRK DRIVE
KANSAS CITY, MO 64105-1310
TELEPHONE (816) 472-1201
CERTIFICATE OF AUTHORITY NO. 001270

REV.

\\kcow00\jobs4\76739\PlanProduction\Bridges\1-A0729-GrandRiver\Drawings\B_A07291_004_J1P3106.dgn 08-JUL-2020 06:25

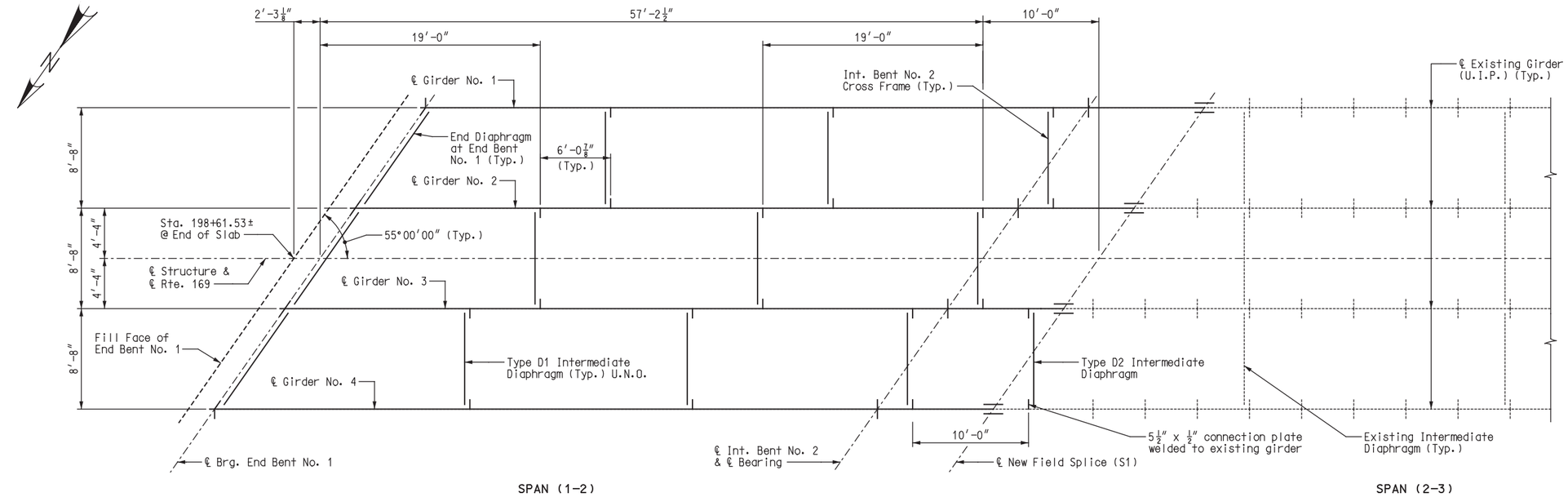

PART PLAN OF STRUCTURAL STEEL

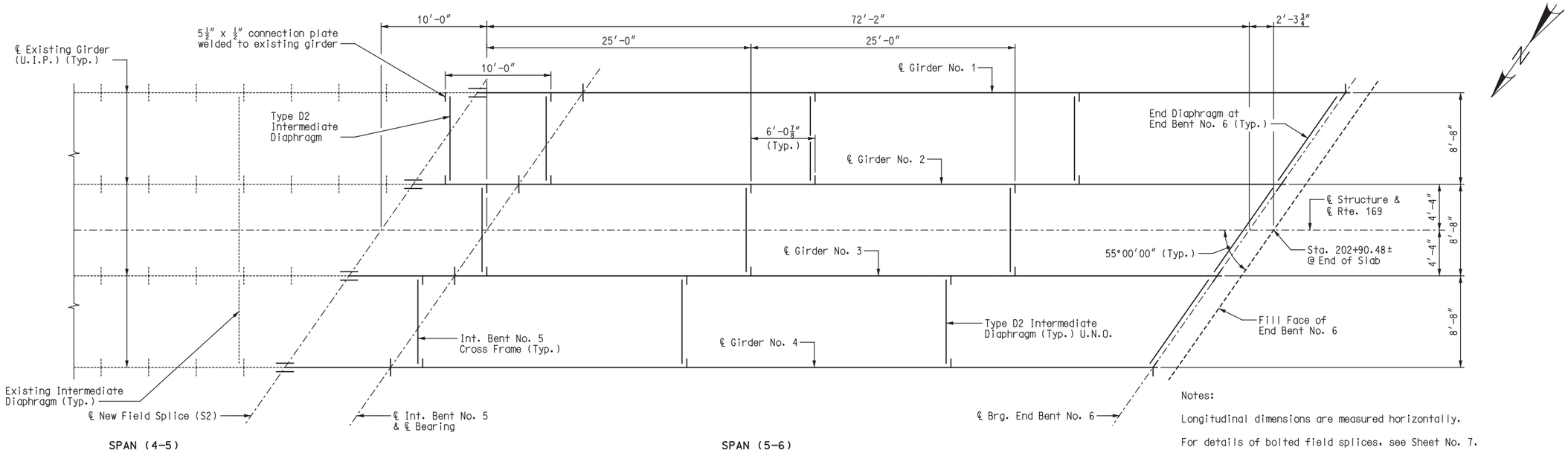

PART PLAN OF STRUCTURAL STEEL

Notes:

Longitudinal dimensions are measured horizontally.

For details of bolted field splices, see Sheet No. 7.

For details of bearing stiffeners and intermediate diaphragm connection plates, see Sheet No. 7.

For details of end diaphragms, see Sheet No. 8.

Plate girders shall be fabricated in accordance with the camber diagram shown on Sheet No. 11.

For details of intermediate bent cross frames and intermediate diaphragms, see Sheet No. 9.

Fabricated structural steel shall be ASTM A709, Grade 50 except as noted.

PLAN OF STRUCTURAL STEEL

STATE OF MISSOURI
JEFFREY B. SMITH
NUMBER E-27175
REGISTERED PROFESSIONAL ENGINEER

THIS SHEET HAS BEEN SIGNED, SEALED, AND DATED ELECTRONICALLY.

DATE	
07/17/2020	
ROUTE 169	STATE MO
DISTRICT BR	SHEET NO. 5
COUNTY GENTRY	
JOB NO. J1P3106	
CONTRACT ID.	
PROJECT NO.	
BRIDGE NO. A07291	

IF A SEAL IS PRESENT ON THIS SHEET IT HAS BEEN ELECTRONICALLY SEALED AND DATED.

DESCRIPTION	DATE

MISSOURI HIGHWAYS AND TRANSPORTATION COMMISSION
105 WEST CAPITOL
JEFFERSON CITY, MO 65102
1-888-ASK-MODOT (1-888-275-6636)

HNTB
715 KIRK DRIVE
KANSAS CITY, MO 64105-1310
TELEPHONE (816) 472-1201
CERTIFICATE OF AUTHORITY
NO. 001270

REV.

Detailed MAY 2020
Checked MAY 2020

Note: This drawing is not to scale. Follow dimensions.

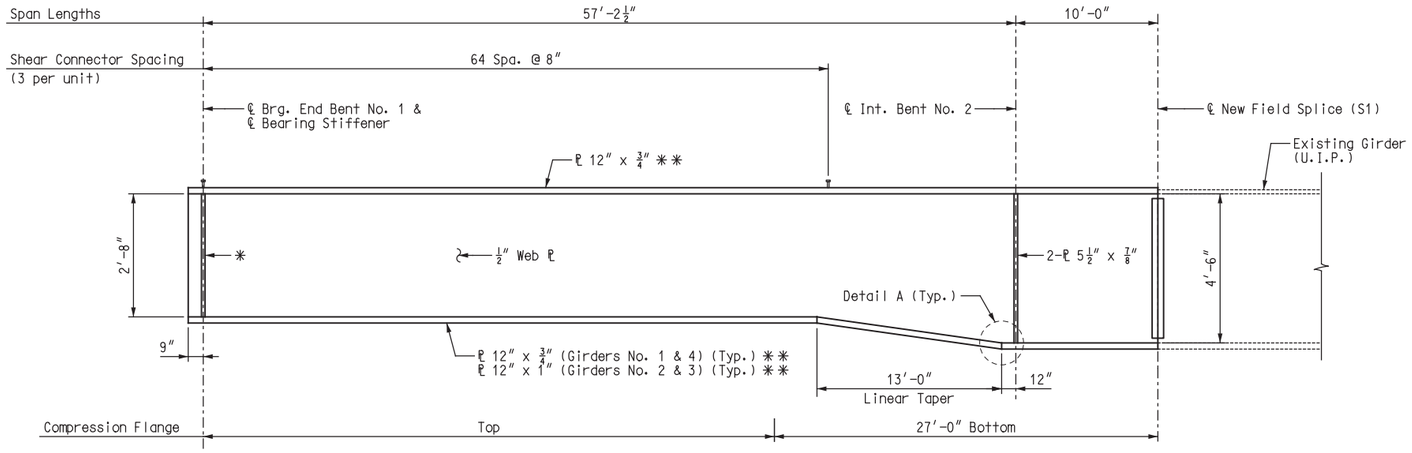

PART ELEVATION

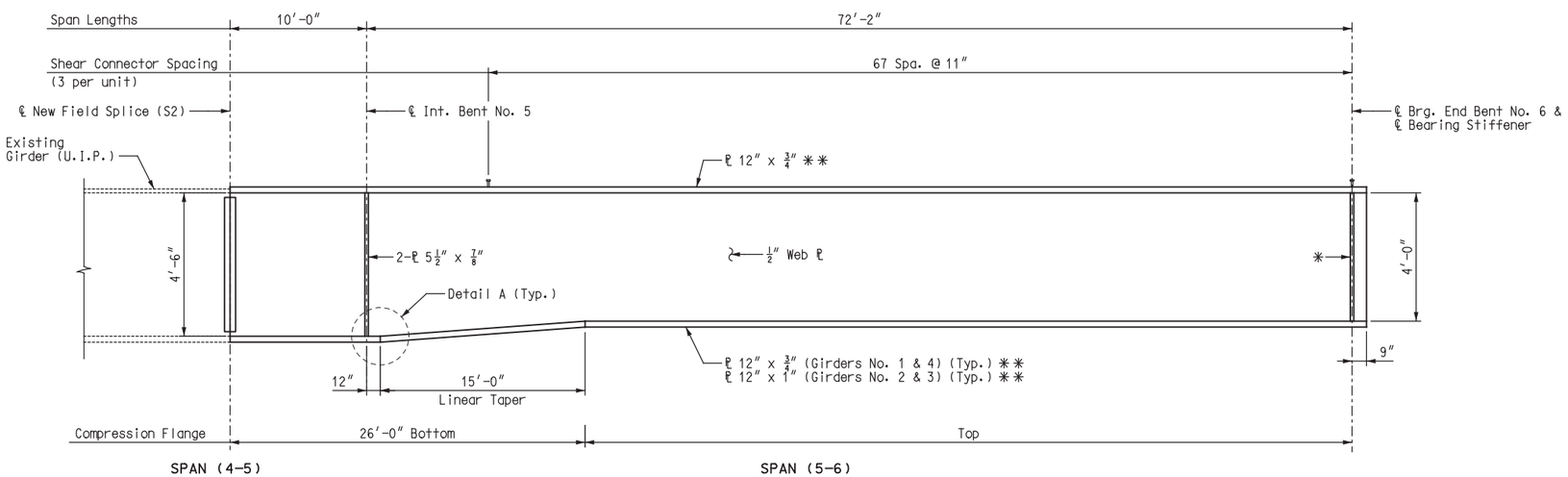

PART ELEVATION

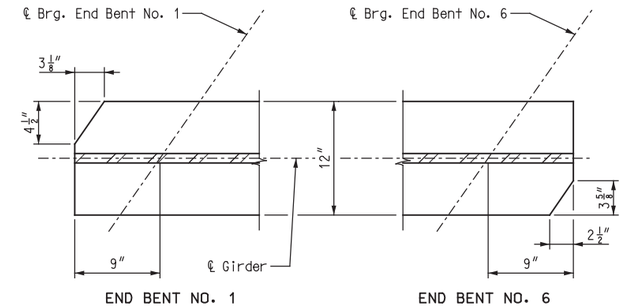

FLANGE CLIP DETAILS

(Girders No. 1 thru 4)

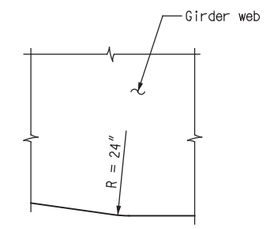

DETAIL A

✱ 1-℄ 7/8″ x 5 1/2″ (exterior face of exterior gdr.)
1-℄ 7/8″ x 7″ (interior face of exterior gdr.)
2-℄ 7/8″ x 7″ (interior gdrs.)

Notes:

✱✱ Indicates flange plate subject to notch toughness requirements. All web plates shall be subject to notch toughness requirements.

For details of bolted field splices, see Sheet No. 7.

For diaphragm details, see Sheets No. 8 & 9.

For bearing stiffeners and connection plate details, see Sheet No. 7.

For location of slab drain attachment holes, see Sheet No. 10.

Fabricated structural steel shall be ASTM A709, Grade 50, except as noted.

Longitudinal dimensions are horizontal from ℄ bearing to ℄ bearing.

For plan of structural steel, see Sheet No. 5.

Plate girders shall be fabricated in accordance with the camber diagram shown on Sheet No. 11.

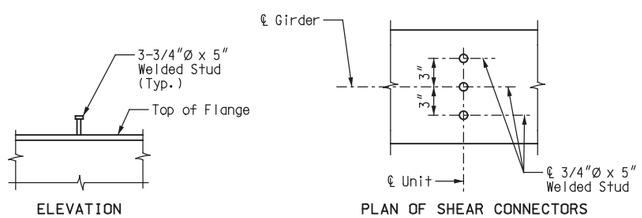

DETAILS OF SHEAR CONNECTOR UNITS

Notes:

Weight of 1,197 pounds of shear connectors is included in the weight of Fabricated Structural Low Alloy Steel (Plate Girder) A709, Grade 50.

Shear connectors shall be in accordance with Sec 712, 1037 & 1080.

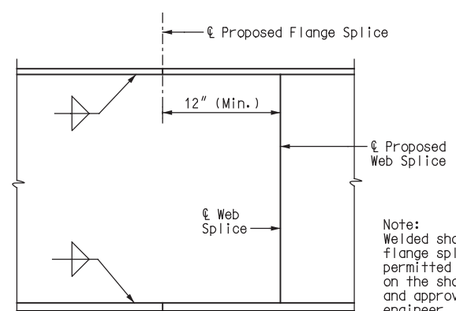

WELDED SHOP WEB SPLICE

Note:
Welded shop web and flange splices may be permitted when detailed on the shop drawings and approved by the engineer. No additional payment will be made for optional welded shop web and flange splices.

ELEVATION OF GIRDER

Detailed MAY 2020
Checked MAY 2020

Note: This drawing is not to scale. Follow dimensions.

STATE OF MISSOURI
JEFFREY B. SMITH
NUMBER E-27175
REGISTERED PROFESSIONAL ENGINEER

THIS SHEET HAS BEEN SIGNED, SEALED, AND DATED ELECTRONICALLY.

DATE	
07/17/2020	
ROUTE 169	STATE MO
DISTRICT BR	SHEET NO. 6
COUNTY GENTRY	
JOB NO. J1P3106	
CONTRACT ID.	
PROJECT NO.	
BRIDGE NO. A07291	

DATE	DESCRIPTION

IF A SEAL IS PRESENT ON THIS SHEET IT HAS BEEN ELECTRONICALLY SEALED AND DATED.

MISSOURI HIGHWAYS AND TRANSPORTATION COMMISSION
105 WEST CAPITOL
JEFFERSON CITY, MO 65102
1-888-ASK-MODOT (1-888-275-6636)

HNTB
715 KIRK DRIVE
KANSAS CITY, MO 64105-1310
TELEPHONE (816) 472-1201
CERTIFICATE OF AUTHORITY
NO. 001270

REV.

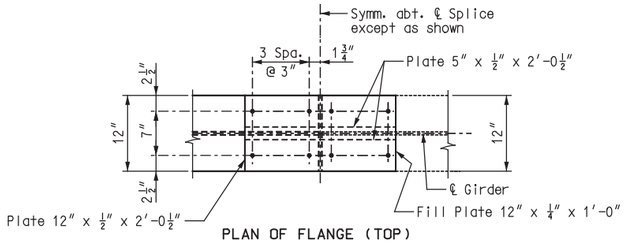

PLAN OF FLANGE (TOP)

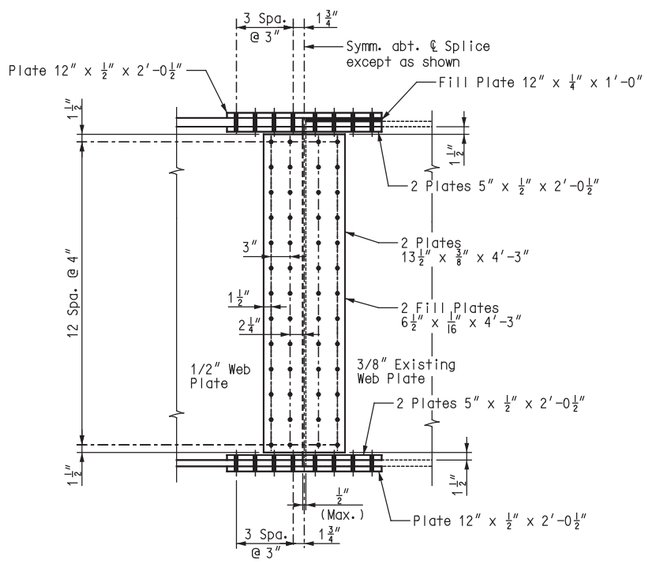

ELEVATION

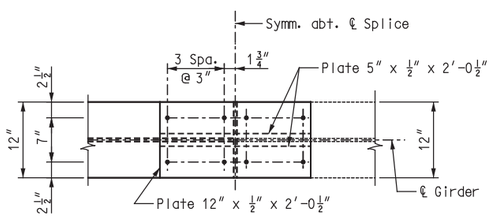

PLAN OF FLANGE (BOTTOM)

DETAIL OF BOLTED FIELD SPLICE

Field splice (S1) shown, field splice (S2) opposite hand.

Notes:

Use 7/8″Ø high strength bolts with 15/16″Ø holes.

Contact surfaces shall be in accordance with Sec 1081 for surface preparation.

Fabricated structural steel for splice plates shall be ASTM A709 Grade 50.

For field splice locations, see Sheet No. 5.

All splice plates shall be subject to notch toughness requirements.

No flame drilling for field drilling will be permitted.

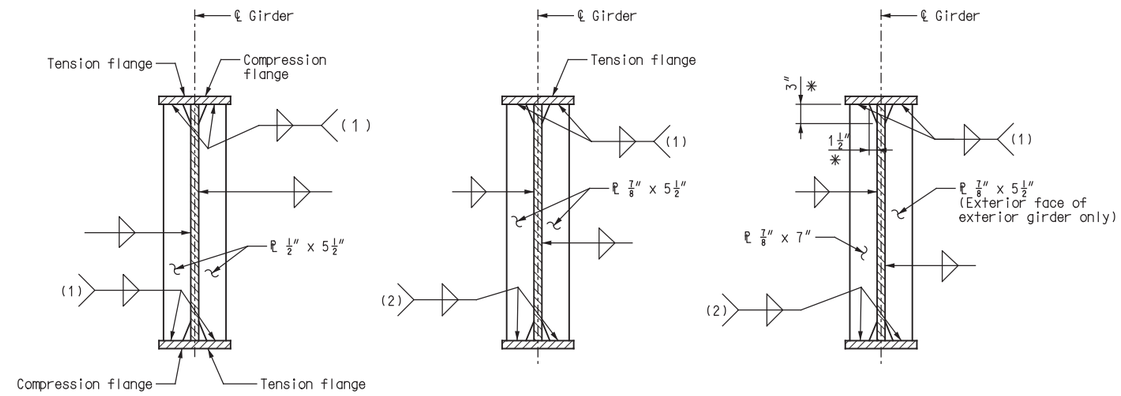

INT. DIAPH. CONN. PLATE

INT. BRG. STIFF.

END BRG. STIFF.

(1) Tight fit

(2) Grind or mill to bear.

✱ Typical for all int. diaph. conn. pl. and brg. stiff.

WELDING DETAILS

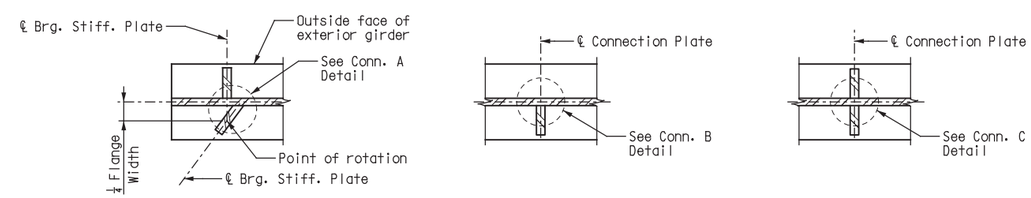

END BRG. STIFF.

INT. DIAPH. & CROSS FRAME CONN. PLATE

INT. BRG. STIFF.

TYPICAL LOCATION DETAILS

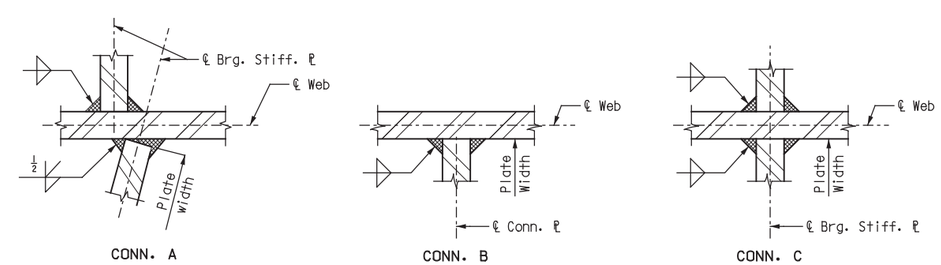

CONN. A

CONN. B

CONN. C

WELDING DETAILS

Note:

Fabricated structural steel for stiffeners shall be ASTM A709 Grade 50.

MISCELLANEOUS STEEL DETAILS

Detailed MAY 2020
Checked MAY 2020

Note: This drawing is not to scale. Follow dimensions.

STATE OF MISSOURI
JEFFREY B. SMITH
NUMBER E-27175
REGISTERED PROFESSIONAL ENGINEER

THIS SHEET HAS BEEN SIGNED, SEALED, AND DATED ELECTRONICALLY.

DATE	
07/17/2020	
ROUTE 169	STATE MO
DISTRICT BR	SHEET NO. 7
COUNTY GENTRY	
JOB NO. J1P3106	
CONTRACT ID.	
PROJECT NO.	
BRIDGE NO. A07291	

DATE	DESCRIPTION

IF A SEAL IS PRESENT ON THIS SHEET IT HAS BEEN ELECTRONICALLY SEALED AND DATED.

MISSOURI HIGHWAYS AND TRANSPORTATION COMMISSION
105 WEST CAPITOL
JEFFERSON CITY, MO 65102
1-888-ASK-MODOT (1-888-275-6636)

HNTB
715 KIRK DRIVE
KANSAS CITY, MO 64105-1310
TELEPHONE (816) 472-1201
CERTIFICATE OF AUTHORITY NO. 001270

REV.

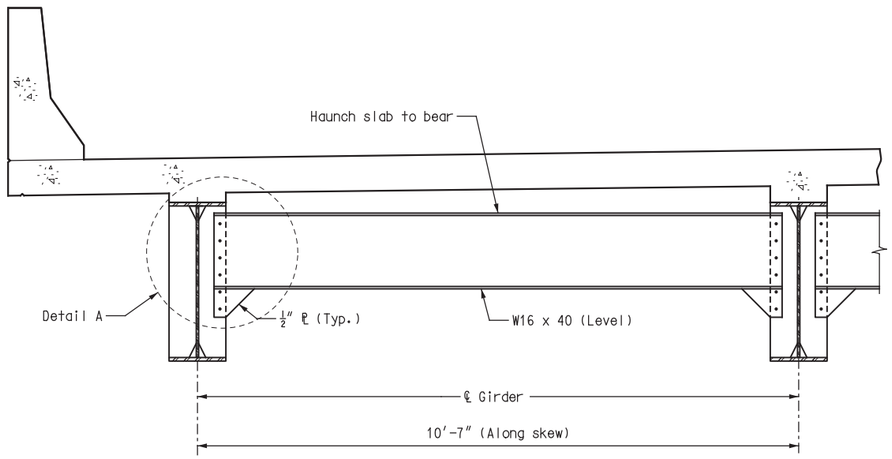

TYPICAL PART SECTION SHOWING
END DIAPHRAGM AT END BENT NO. 1

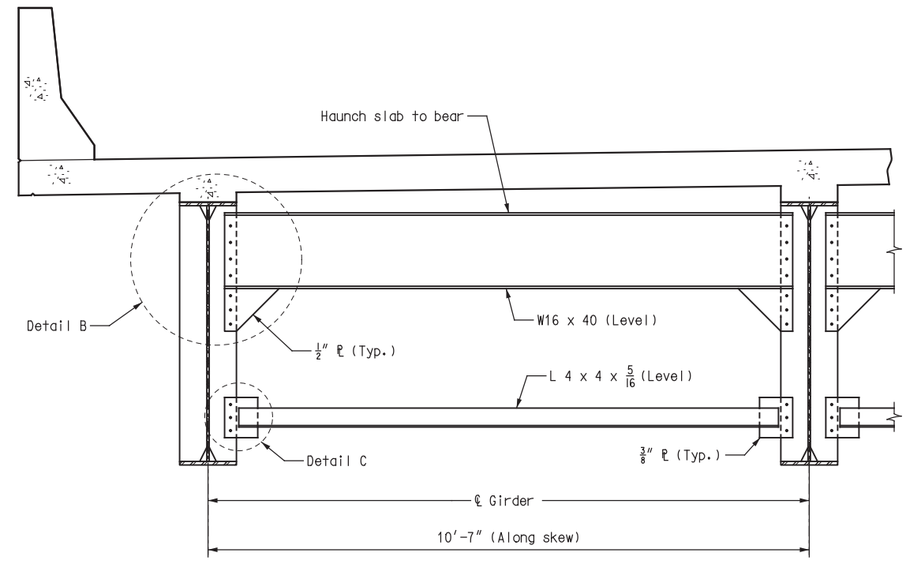

TYPICAL PART SECTION SHOWING
END DIAPHRAGM AT END BENT NO. 6

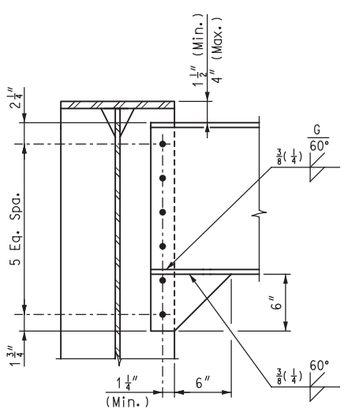

DETAIL A

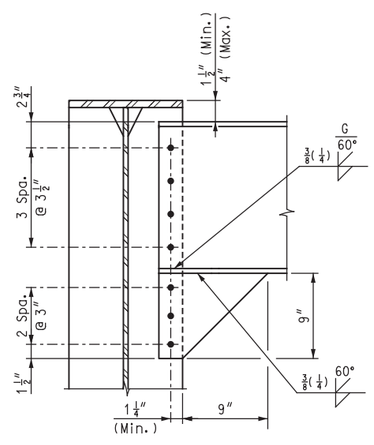

DETAIL B

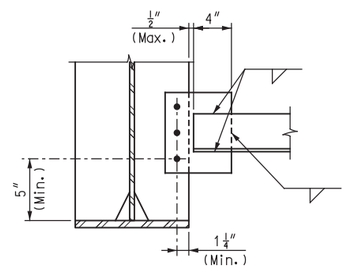

DETAIL C

Notes:

Fabricated structural steel shall be ASTM A709 Grade 50.

For Plan of Structural Steel, see Sheet No. 5.

For Elevation of Girder, see Sheet No. 6.

For Miscellaneous Steel Details, see Sheet No. 7.

END DIAPHRAGM DETAILS

Detailed MAY 2020
Checked MAY 2020

Note: This drawing is not to scale. Follow dimensions.

STATE OF MISSOURI
JEFFREY B. SMITH
NUMBER E-27175
REGISTERED PROFESSIONAL ENGINEER

THIS SHEET HAS BEEN SIGNED, SEALED, AND DATED ELECTRONICALLY.

DATE 07/17/2020	
ROUTE 169	STATE MO
DISTRICT BR	SHEET NO. 8
COUNTY GENTRY	
JOB NO. J1P3106	
CONTRACT ID.	
PROJECT NO.	
BRIDGE NO. A07291	

DATE	DESCRIPTION

IF A SEAL IS PRESENT ON THIS SHEET IT HAS BEEN ELECTRONICALLY SEALED AND DATED.

MISSOURI HIGHWAYS AND TRANSPORTATION COMMISSION
105 WEST CAPITOL
JEFFERSON CITY, MO 65102
1-888-ASK-MODOT (1-888-275-6636)

HNTB
715 KIRK DRIVE
KANSAS CITY, MO 64105-1310
TELEPHONE (816) 472-1201
CERTIFICATE OF AUTHORITY
NO. 001270

REV.

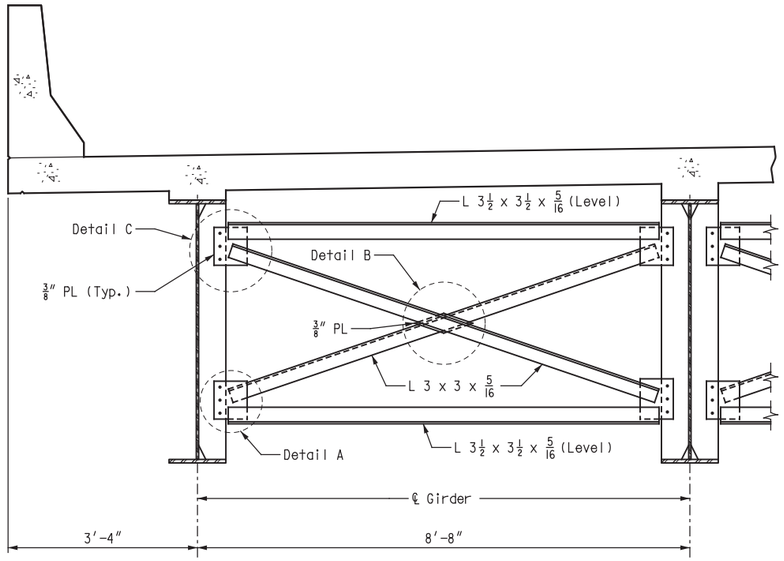

TYPICAL PART SECTION SHOWING
TYPE D2 INTERMEDIATE DIAPHRAGM
& INTERMEDIATE BENT CROSS FRAMES

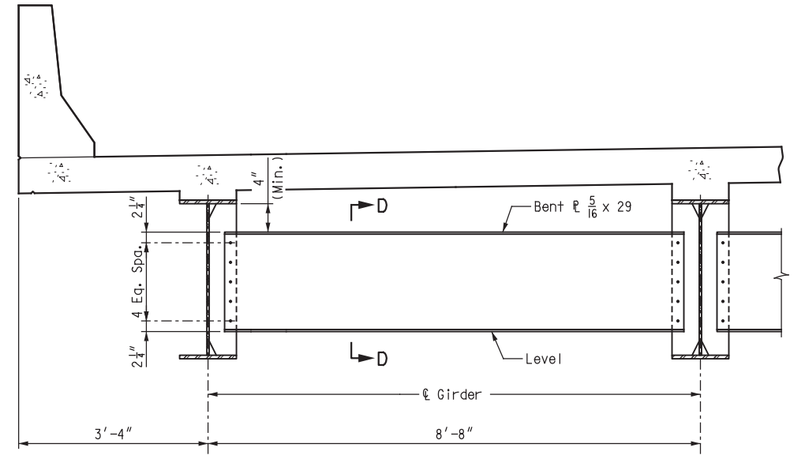

TYPICAL PART SECTION SHOWING
TYPE D1 INTERMEDIATE DIAPHRAGM

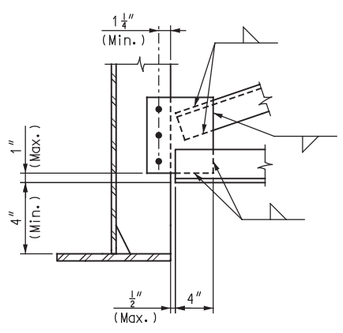

DETAIL A

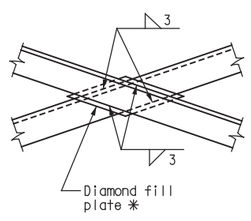

DETAIL B

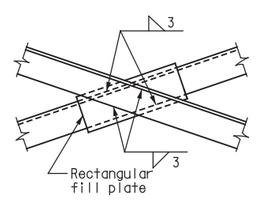

OPTIONAL DETAIL B

✱ At the contractor's option, rectangular fill plates may be used in lieu of diamond fill plates as shown in Optional Detail B.

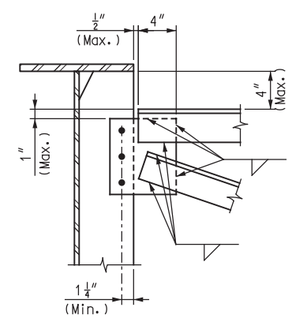

DETAIL C

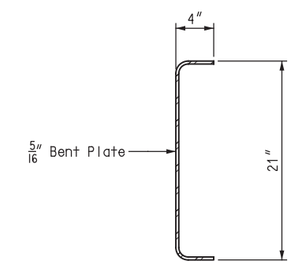

SECTION D-D

Notes:

Fabricated structural steel shall be ASTM A709 Grade 50.

For Plan of Structural Steel, see Sheet No. 5.

For Elevation of Girder, see Sheet No. 6.

For Miscellaneous Steel Details, see Sheet No. 7.

INTERMEDIATE DIAPHRAGM AND INTERMEDIATE BENT CROSS FRAME DETAILS

STATE OF MISSOURI
JEFFREY B. SMITH
NUMBER E-27175
REGISTERED PROFESSIONAL ENGINEER

THIS SHEET HAS BEEN SIGNED, SEALED, AND DATED ELECTRONICALLY.

DATE	
07/17/2020	
ROUTE 169	STATE MO
DISTRICT BR	SHEET NO. 9
COUNTY GENTRY	
JOB NO. J1P3106	
CONTRACT ID.	
PROJECT NO.	
BRIDGE NO. A07291	

DATE	DESCRIPTION

IF A SEAL IS PRESENT ON THIS SHEET IT HAS BEEN ELECTRONICALLY SEALED AND DATED.

MISSOURI HIGHWAYS AND TRANSPORTATION COMMISSION
105 WEST CAPITOL
JEFFERSON CITY, MO 65102
1-888-ASK-MODOT (1-888-275-6636)

HNTB
715 KIRK DRIVE
KANSAS CITY, MO 64105-1310
TELEPHONE (816) 472-1201
CERTIFICATE OF AUTHORITY
NO. 001270

REV.

Detailed MAY 2020
Checked MAY 2020

Note: This drawing is not to scale. Follow dimensions.

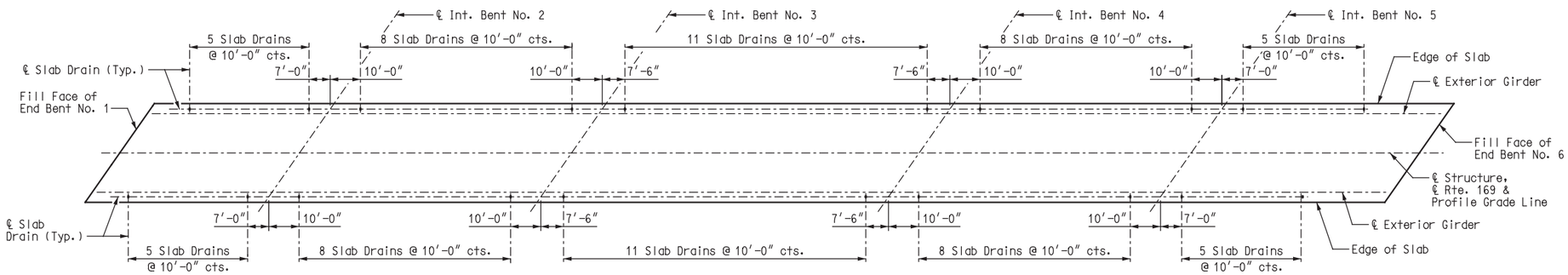

PLAN OF SLAB SHOWING SLAB DRAIN LOCATIONS

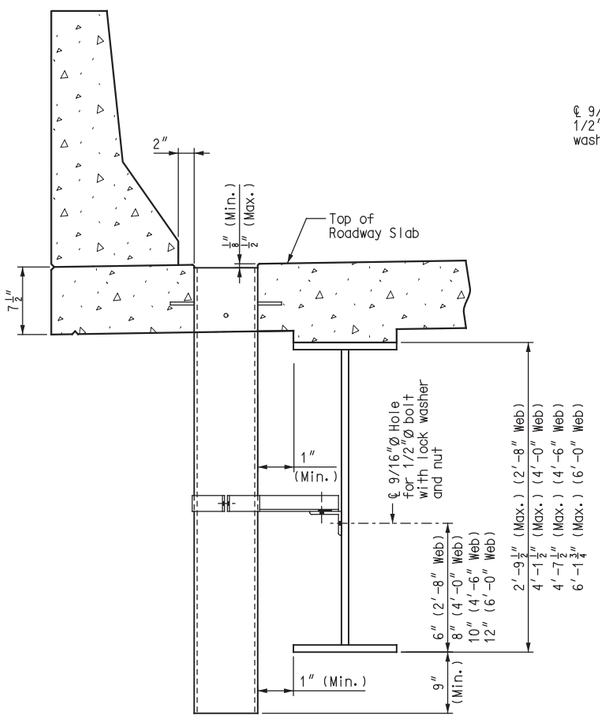

PART SECTION NEAR DRAIN

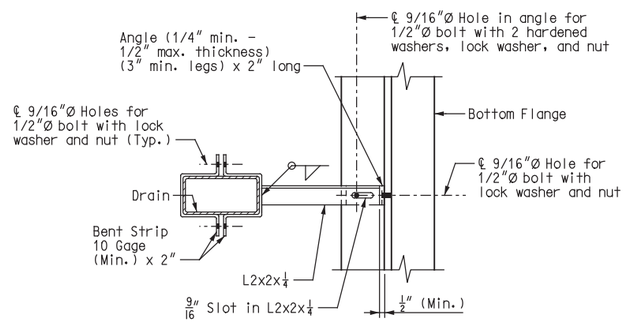

PART SECTION SHOWING BRACKET ASSEMBLY

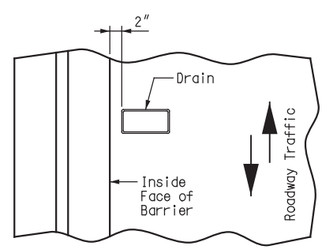

PART PLAN OF SLAB AT DRAIN

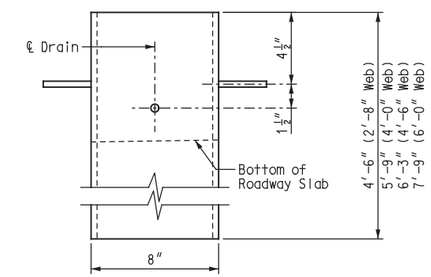

ELEVATION OF DRAIN

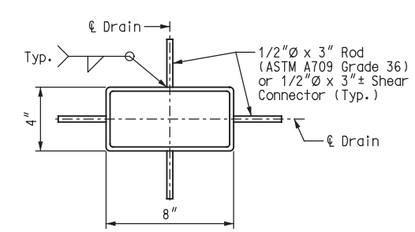

PLAN OF STEEL DRAIN OPTION

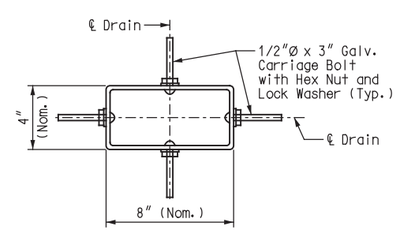

PLAN OF FRP DRAIN OPTION

General Notes:

Contractor shall have the option to construct either steel or FRP slab drains. All drains shall be of same type.

Slab drain bracket assembly shall be ASTM A709 Grade 36 steel.

Locate drains in slab by dimensions shown in Part Section Near Drain.

Reinforcing steel shall be shifted to clear drains.

The bracket assembly shall be galvanized in accordance with ASTM A123.

All bolts, hardened washers, lock washers and nuts shall be galvanized in accordance with ASTM A153.

Shop drawings will not be required for the slab drains and the bracket assembly.

The bolt hole for the bracket assembly attachment shall be located on the proposed plate girder shop drawings.

With the approval of the engineer, the contractor shall adjust drain locations to miss existing field splices and stiffeners.

Field drilling for attachment to existing girders will be considered fully paid by the contract price for slab drains.

Notes for Steel Drain:

Slab drains may be fabricated of either 1/4″ welded sheets of ASTM A709 Grade 36 steel or from 1/4″ structural steel tubing ASTM A500 or A501.

Outside dimensions of drains are 8″ x 4″.

The drains shall be galvanized in accordance with ASTM A123.

Notes for FRP Drain:

Drains shall be machine filament-wound thermosetting resin tubing meeting the requirements of ASTM D2996 with the following exceptions:

Shape of drains shall be rectangular with outside nominal dimensions of 8″ x 4″.

Minimum reinforced wall thickness shall be 1/4 inch.

The resin used shall be ultraviolet (UV) resistant and/or have UV inhibitors mixed throughout. Drains may have an exterior coating for additional UV resistance.

The color of the slab drain shall be gray (Federal Standard 26373). The color shall be uniform throughout the resin and any coating used.

The combination of materials used in the manufacture of the drains shall be tested for UV resistance in accordance with ASTM D4329 Cycle A. The representative material shall withstand at least 500 hours of testing with only minor discoloration and without any physical deterioration. The contractor shall furnish the results of the required ultraviolet testing prior to acceptance of the slab drains.

At the contractor's option, drains may be field cut. The method of cutting FRP slab drain shall be as recommended by the manufacturer to ensure a smooth, chip free cut.

SLAB DRAIN DETAILS

STATE OF MISSOURI
JEFFREY B. SMITH
NUMBER E-27175
REGISTERED PROFESSIONAL ENGINEER

THIS SHEET HAS BEEN SIGNED, SEALED, AND DATED ELECTRONICALLY.

DATE	
07/17/2020	
ROUTE 169	STATE MO
DISTRICT BR	SHEET NO. 10
COUNTY GENTRY	
JOB NO. J1P3106	
CONTRACT ID.	
PROJECT NO.	
BRIDGE NO. A07291	

DATE	DESCRIPTION

IF A SEAL IS PRESENT ON THIS SHEET IT HAS BEEN ELECTRONICALLY SEALED AND DATED.

MISSOURI HIGHWAYS AND TRANSPORTATION COMMISSION
105 WEST CAPITOL
JEFFERSON CITY, MO 65102
1-888-ASK-MODOT (1-888-275-6636)

HNTB
715 KIRK DRIVE
KANSAS CITY, MO 64105-1310
TELEPHONE (816) 472-1201
CERTIFICATE OF AUTHORITY
NO. 001270

REV.

Detailed APR 2020
Checked MAY 2020

Note: This drawing is not to scale. Follow dimensions.

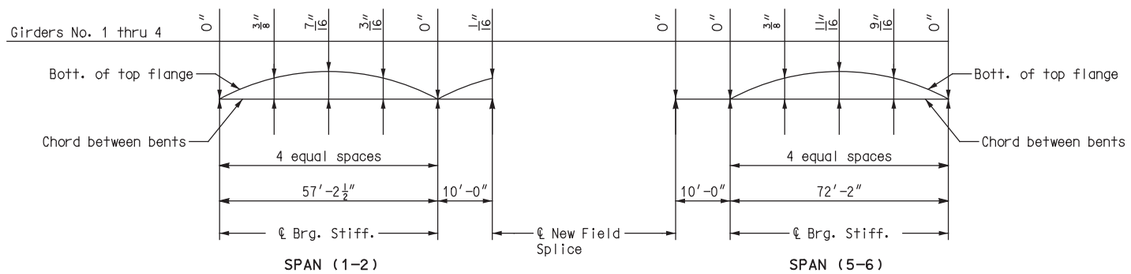

PLATE GIRDER CAMBER DIAGRAM

Note: Camber includes allowance for dead load deflection due to concrete slab, barriers and structural steel.

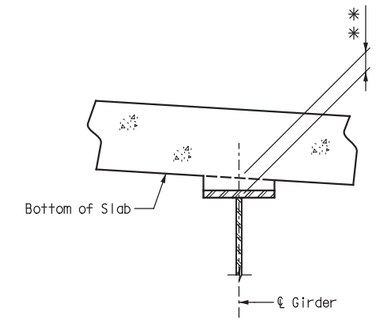

THEORETICAL SLAB HAUNCH

✳✳ Dimension (bottom of slab to top of web) may vary if girder camber after erection differs from plan camber. No payment will be made for any adjustment in forming or additional concrete required for variation in haunching.

Exterior Girders 1 & 4 = 2 1/8″
Interior Girders 2 & 3 = 3 1/2″

Note: Theoretical slab haunch values shown are for new plate girders only. See job special provisions for guidance on deflection and haunching of existing plate girders.

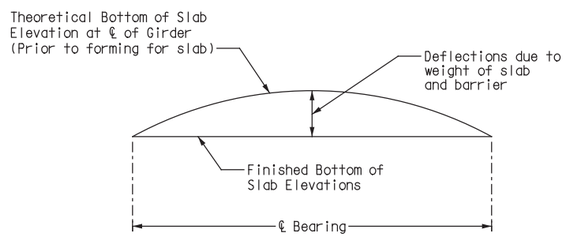

TYPICAL SLAB ELEVATIONS DIAGRAM

THEORETICAL BOTTOM OF SLAB ELEVATIONS AT ℄ OF GIRDER (PRIOR TO FORMING FOR SLAB) ✳

	Span (1-2) (57′-2 1/2″ ℄ Brg. - ℄ Brg.)				
	℄ Brg.	.25	.50	.75	℄ Brg.
Girder No. 1	888.15	888.17	888.18	888.16	888.15
Girder No. 2	888.28	888.30	888.31	888.29	888.28
Girder No. 3	888.28	888.30	888.31	888.29	888.28
Girder No. 4	888.15	888.17	888.18	888.16	888.15

	Span (2-3) (90′-0″ ℄ Brg. - ℄ Brg.)										
	℄ Brg.	.10	.20	.30	.40	.50	.60	.70	.80	.90	℄ Brg.
Girder No. 1	888.15	888.15	888.15	888.16	888.16	888.16	888.15	888.14	888.14	888.14	888.15
Girder No. 2	888.28	888.28	888.28	888.29	888.29	888.29	888.28	888.27	888.27	888.27	888.28
Girder No. 3	888.28	888.28	888.28	888.29	888.29	888.29	888.28	888.27	888.27	888.27	888.28
Girder No. 4	888.15	888.15	888.15	888.16	888.16	888.16	888.15	888.14	888.14	888.14	888.15

	Span (3-4) (115′-0″ ℄ Brg. - ℄ Brg.)										
	℄ Brg.	.10	.20	.30	.40	.50	.60	.70	.80	.90	℄ Brg.
Girder No. 1	888.15	888.17	888.19	888.23	888.25	888.26	888.25	888.23	888.20	888.17	888.15
Girder No. 2	888.28	888.30	888.32	888.35	888.38	888.39	888.38	888.36	888.33	888.30	888.28
Girder No. 3	888.28	888.30	888.32	888.35	888.38	888.39	888.38	888.36	888.33	888.30	888.28
Girder No. 4	888.15	888.17	888.19	888.23	888.25	888.26	888.25	888.23	888.20	888.17	888.15

	Span (4-5) (90′-0″ ℄ Brg. - ℄ Brg.)										
	℄ Brg.	.10	.20	.30	.40	.50	.60	.70	.80	.90	℄ Brg.
Girder No. 1	888.15	888.14	888.14	888.14	888.15	888.15	888.15	888.15	888.15	888.14	888.15
Girder No. 2	888.28	888.27	888.27	888.27	888.28	888.28	888.28	888.28	888.28	888.27	888.28
Girder No. 3	888.28	888.27	888.27	888.27	888.28	888.28	888.28	888.28	888.28	888.27	888.28
Girder No. 4	888.15	888.14	888.14	888.14	888.15	888.15	888.15	888.15	888.15	888.14	888.15

	Span (5-6) (72′-2″ ℄ Brg. - ℄ Brg.)				
	℄ Brg.	.25	.50	.75	℄ Brg.
Girder No. 1	888.15	888.17	888.19	888.18	888.15
Girder No. 2	888.28	888.30	888.32	888.31	888.28
Girder No. 3	888.28	888.30	888.32	888.31	888.28
Girder No. 4	888.15	888.17	888.19	888.18	888.15

✳ Elevations are based on a constant slab thickness of 7 1/2″ and include allowance for theoretical dead load deflections due to weight of slab and barrier.

THEORETICAL BOTTOM OF SLAB ELEVATIONS AND GIRDER CAMBER DIAGRAM

Detailed MAY 2020
Checked MAY 2020

Note: This drawing is not to scale. Follow dimensions.

STATE OF MISSOURI
JEFFREY B. SMITH
NUMBER E-27175
REGISTERED PROFESSIONAL ENGINEER

THIS SHEET HAS BEEN SIGNED, SEALED, AND DATED ELECTRONICALLY.

DATE	
07/17/2020	
ROUTE 169	STATE MO
DISTRICT BR	SHEET NO. 11
COUNTY GENTRY	
JOB NO. J1P3106	
CONTRACT ID.	
PROJECT NO.	
BRIDGE NO. A07291	

DESCRIPTION	DATE

IF A SEAL IS PRESENT ON THIS SHEET IT HAS BEEN ELECTRONICALLY SEALED AND DATED.

MISSOURI HIGHWAYS AND TRANSPORTATION COMMISSION
105 WEST CAPITOL
JEFFERSON CITY, MO 65102
1-888-ASK-MODOT (1-888-275-6636)

HNTB
715 KIRK DRIVE
KANSAS CITY, MO 64105-1310
TELEPHONE (816) 472-1201
CERTIFICATE OF AUTHORITY
NO. 001270

REV.

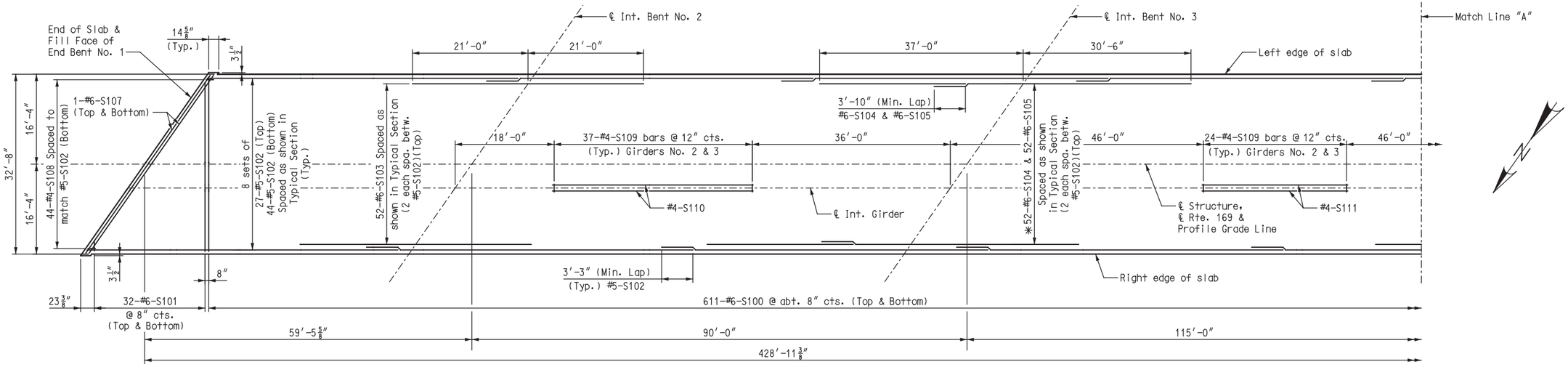

✱ Lap S104 & S105 to achieve staggered bar splices

PLAN OF SLAB SHOWING REINFORCEMENT

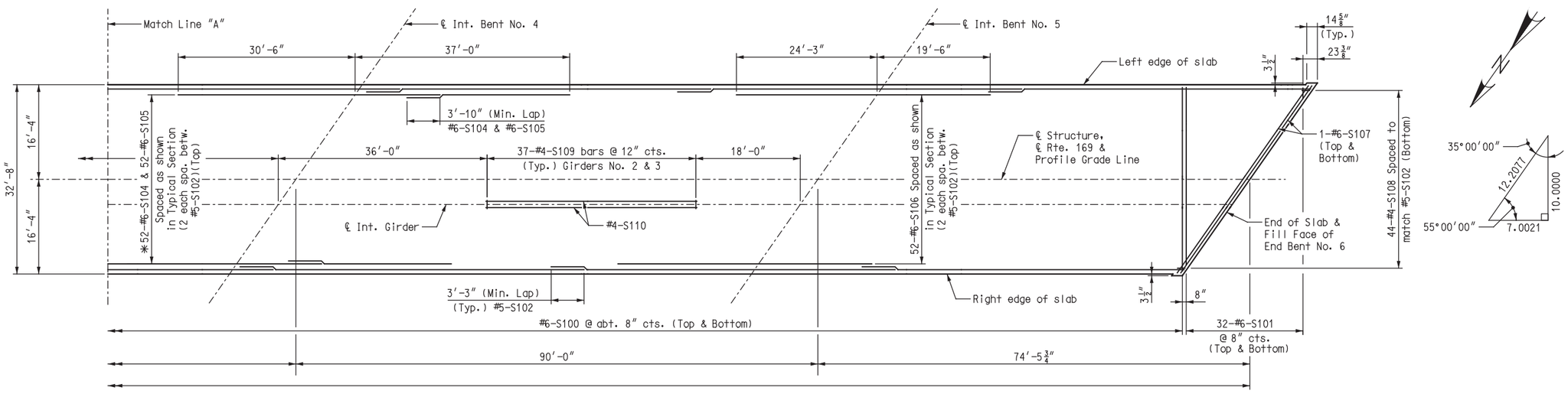

PLAN OF SLAB SHOWING REINFORCEMENT

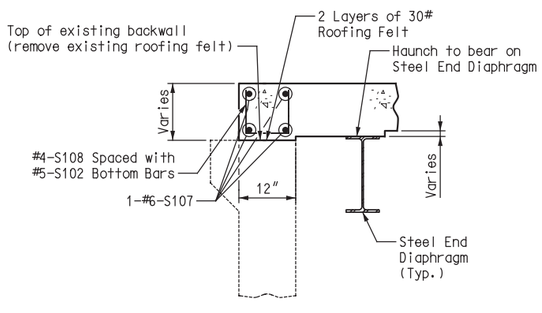

PART SECTION THRU SLAB AT END BENTS

Notes:

For Typical Section Thru Slab and Slab Pouring Sequence, see Sheet No. 13.

For details and reinforcement of Type B Barrier not shown, see Sheets No. 14 and 15.

For details and locations of slab drains, see Sheet No. 10.

Longitudinal slab dimensions are measured horizontally.

For Theoretical Bottom of Slab Elevations, see Sheet No. 11.

Transverse reinforcement shall be placed perpendicular to ℄ Rte. 169.

In order to maintain minimum slab thickness, it may be necessary to raise the grade uniformly throughout the structure. No payment will be made for additional labor or materials required for variation in thickness or necessary grade adjustment.

PLAN OF SLAB SHOWING REINFORCEMENT

STATE OF MISSOURI
JEFFREY B. SMITH
NUMBER E-27175
REGISTERED PROFESSIONAL ENGINEER

THIS SHEET HAS BEEN SIGNED, SEALED, AND DATED ELECTRONICALLY.

DATE	
07/17/2020	
ROUTE 169	STATE MO
DISTRICT BR	SHEET NO. 12
COUNTY GENTRY	
JOB NO. J1P3106	
CONTRACT ID.	
PROJECT NO.	
BRIDGE NO. A07291	

DATE	DESCRIPTION

IF A SEAL IS PRESENT ON THIS SHEET IT HAS BEEN ELECTRONICALLY SEALED AND DATED.

MISSOURI HIGHWAYS AND TRANSPORTATION COMMISSION
105 WEST CAPITOL
JEFFERSON CITY, MO 65102
1-888-ASK-MODOT (1-888-275-6636)

HNTB
715 KIRK DRIVE
KANSAS CITY, MO 64105-1310
TELEPHONE (816) 472-1201
CERTIFICATE OF AUTHORITY NO. 001270

Detailed MAY 2020
Checked MAY 2020

Note: This drawing is not to scale. Follow dimensions.

REV.

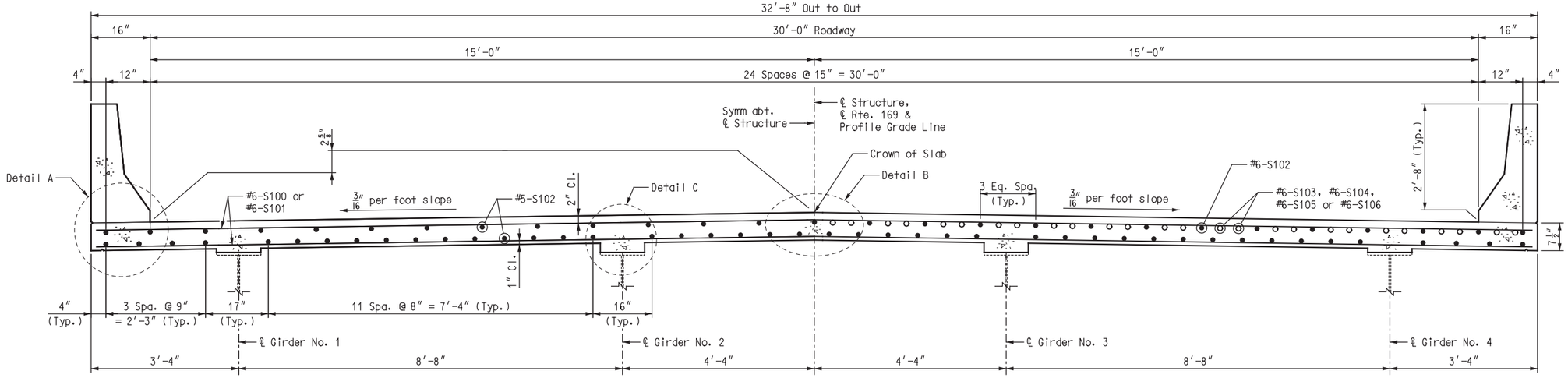

TYPICAL SECTION THRU SLAB

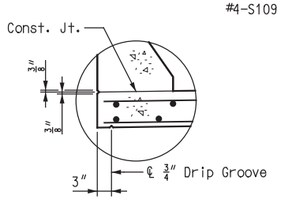

DETAIL A

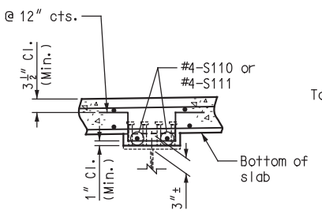

DETAIL C

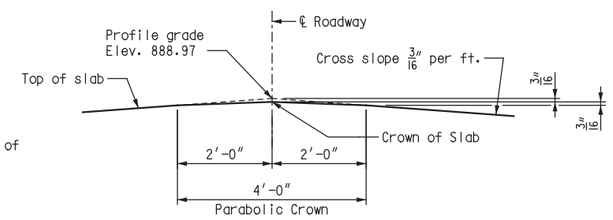

DETAIL B

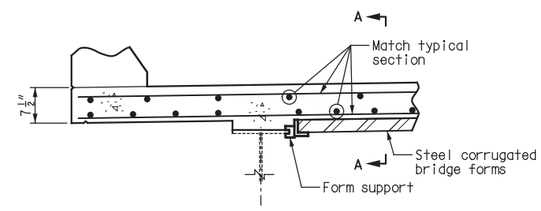

OPTIONAL STAY IN PLACE FORMS

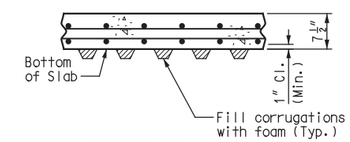

SECTION A-A

Notes:
Corrugated steel forms, supports, closure elements and accessories shall be in accordance with grade requirement and coating designation G165 of ASTM A653. Complete shop drawings of the permanent steel deck forms shall be required in accordance with Sec 1080.

Corrugations of stay-in-place forms shall be filled with an expanded polystyrene material. The polystyrene material shall be placed in the forms with an adhesive in accordance with the manufacturer's recommendations.

Form sheets shall not rest directly on the top of girder flanges. Sheets shall be securely fastened to form supports with a minimum bearing length of one inch on each end. Form supports shall be placed in direct contract with the flange. Welding on or drilling holes in the girder flanges will not be permitted. All steel fabrication and construction shall be in accordance with Sec 1080 and 712. Certified field welders will not be required for welding of the form supports.

The design of stay-in-place corrugated steel forms is per manufacturer which shall be in accordance with Sec 703 for false work and forms. Maximum actual weight of corrugated steel forms allowed shall be 4 psf assumed for girder loading.

The contractor shall provide a method of preventing the direct contact of the stay-in-place forms and connection components with uncoated weathering steel members that is approved by the engineer.

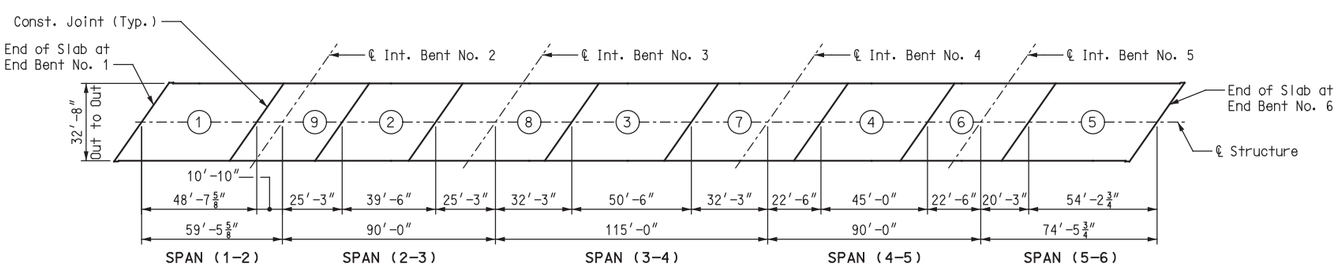

	Sequence of Pours									Min. rate of pour cu. yds./hr.	
	Direction									With retarder	No retarder
Basic sequence	1	2	3	4	5	6	7	8	9	25	25
	Either Direction										
Alternate pours to the basic skip sequence are subject to the approval of the engineer in accordance with Sec 703.											
Alternate "A" pours	1	9 + 2	8 + 3	7 + 4	6 + 5					27	44
	End to 9	1 to 8	2 to 7	3 to 6	4 to End						
Alternate "B" pours	1 + 9 + 2	8 + 3	7 + 4 + 6 + 5							27	44
	End to 8	2 to 7	3 to End								
Alternate "C" pours	1 + 9 + 2 + 8 + 3	7 + 4 + 6 + 5								27	44
	End to 7	3 to End									
Alternate "D" pours	1 + 9 + 2 + 8 + 3 + 7 + 4 + 6 + 5									27	44
	End to End										

The contractor shall pour and satisfactorily finish the slab pours at the rate given.
Retarder, if used, shall be approved type and retard the set of concrete to 2.5 hours.

SLAB POURING SEQUENCE

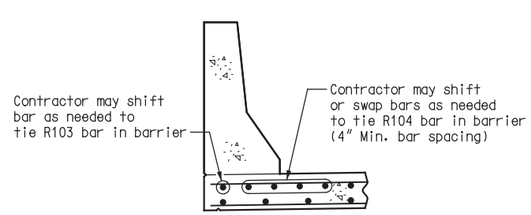

OPTIONAL SHIFTING TOP BARS AT BARRIER

Notes:

For details and reinforcement of Type B Barrier not shown, see Sheets No. 14 and 15.

For Plan of Slab showing reinforcement, see Sheet No. 12.

For Theoretical Bottom of Slab Elevations, Theoretical Slab Haunching Diagram and Girder Camber Diagram, see Sheet No. 11.

For details and location of slab drains, see Sheet No. 10.

SLAB CROSS SECTION AND POURING SEQUENCE

Detailed MAY 2020
Checked MAY 2020

Note: This drawing is not to scale. Follow dimensions.

STATE OF MISSOURI
JEFFREY B. SMITH
NUMBER E-27175
REGISTERED PROFESSIONAL ENGINEER

THIS SHEET HAS BEEN SIGNED, SEALED, AND DATED ELECTRONICALLY.

DATE	
07/17/2020	
ROUTE 169	STATE MO
DISTRICT BR	SHEET NO. 13
COUNTY GENTRY	
JOB NO. J1P3106	
CONTRACT ID.	
PROJECT NO.	
BRIDGE NO. A07291	

DESCRIPTION

DATE

IF A SEAL IS PRESENT ON THIS SHEET IT HAS BEEN ELECTRONICALLY SEALED AND DATED.

MISSOURI HIGHWAYS AND TRANSPORTATION COMMISSION
105 WEST CAPITOL
JEFFERSON CITY, MO 65102
1-888-ASK-MODOT (1-888-275-6636)

HNTB
715 KIRK DRIVE
KANSAS CITY, MO 64105-1310
TELEPHONE (816) 472-1201
CERTIFICATE OF AUTHORITY
NO. 001270

REV.

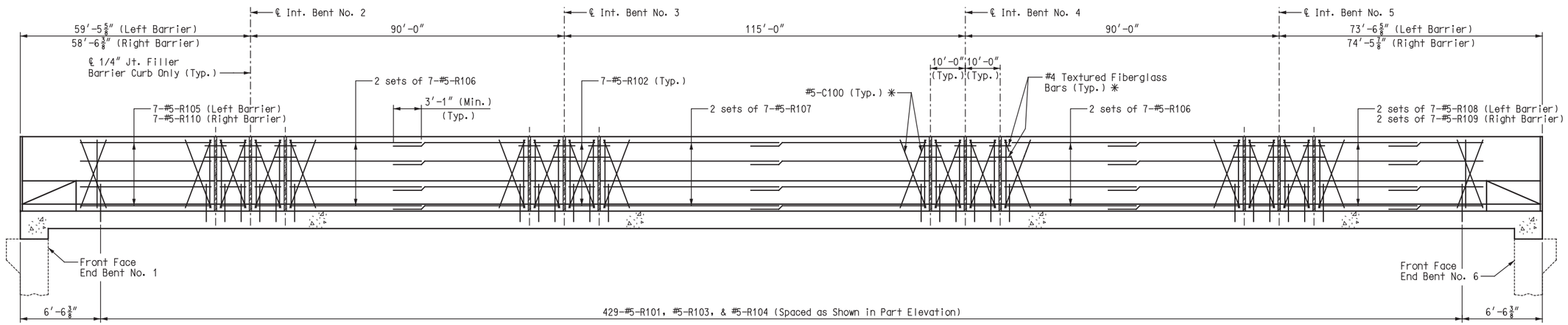

ELEVATION OF BARRIER

(Left barrier shown, right barrier similar except as noted)

Longitudinal dimensions are horizontal measured along outside face of barrier.

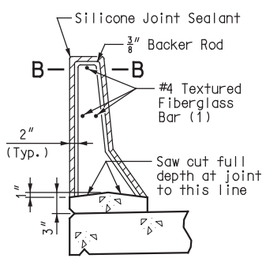

SECTION THRU SAW CUT JOINT

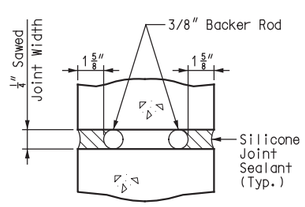

SECTION B-B

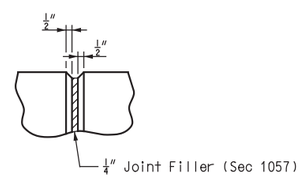

PART ELEVATION AT FORMED JOINT

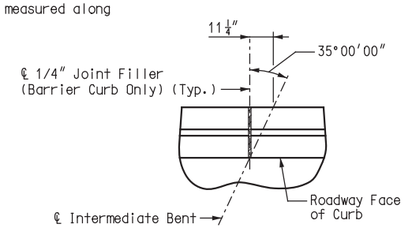

PART PLAN SHOWING JOINT LOCATION

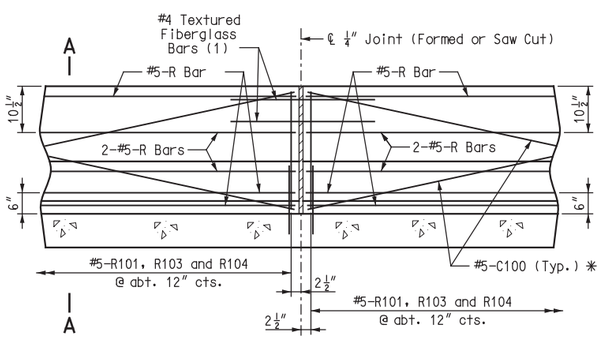

PART ELEVATION OF BARRIER

(1) Four feet long, centered on joint, slip-formed option only

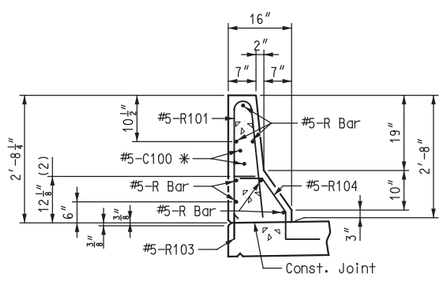

SECTION A-A

Use a minimum lap of 3′-1″ for #5 horizontal barrier bars.

The cross-sectional area above the slab is 2.27 square feet.

(2) To top of bar

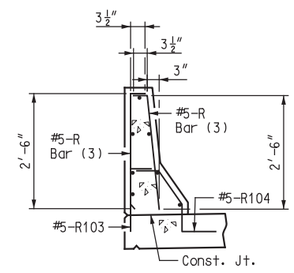

R-BAR PERMISSIBLE ALTERNATE SHAPE

(3) The R101 bar may be separated into two bars as shown, at the contractor's option, only when slip forming is not used. (All dimensions are out to out.)

GENERAL NOTES:

✳ Slip-formed option only.

Conventional forming or slip forming may be used. Saw cut joints may be used with conventional forming.

Top of barrier shall be built parallel to grade with barrier joints normal to grade.

All exposed edges of barrier shall have either a 1/2-inch radius or a 3/8-inch bevel, unless otherwise noted.

Payment for all concrete and reinforcement, complete in place, will be considered completely covered by the contract unit price for Type B Barrier per linear foot.

Concrete in the barrier shall be Class B-1.

Measurement of barrier is to the nearest linear foot for each structure, measured along the outside top of slab from end of slab to end of slab.

Concrete traffic barrier delineators shall be placed on top of the barrier as shown on Missouri Standard Plan 617.10 and in accordance with Sec 617. Delineators on bridges with two-lane, two-way traffic shall have retroreflective sheeting on both sides. Concrete traffic barrier delineators will be considered completely covered by the contract unit price for Type B Barrier.

Joint sealant and backer rods shall be in accordance with Sec 717 for silicone joint sealant for saw cut and formed joints.

For slip-formed option, both sides of barrier shall have a vertically broomed finish and the top shall have a transversely broomed finish.

TYPE B BARRIER

Detailed MAY 2020
Checked MAY 2020

Note: This drawing is not to scale. Follow dimensions.

STATE OF MISSOURI
JEFFREY B. SMITH
NUMBER E-27175
REGISTERED PROFESSIONAL ENGINEER

THIS SHEET HAS BEEN SIGNED, SEALED, AND DATED ELECTRONICALLY.

DATE	
07/17/2020	
ROUTE 169	STATE MO
DISTRICT BR	SHEET NO. 14
COUNTY GENTRY	
JOB NO. J1P3106	
CONTRACT ID.	
PROJECT NO.	
BRIDGE NO. A07291	

DESCRIPTION	DATE

IF A SEAL IS PRESENT ON THIS SHEET IT HAS BEEN ELECTRONICALLY SEALED AND DATED.

MISSOURI HIGHWAYS AND TRANSPORTATION COMMISSION
105 WEST CAPITOL
JEFFERSON CITY, MO 65102
1-888-ASK-MODOT (1-888-275-6636)

HNTB
715 KIRK DRIVE
KANSAS CITY, MO 64105-1310
TELEPHONE (816) 472-1201
CERTIFICATE OF AUTHORITY NO. 001270

REV.

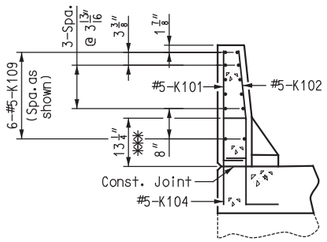

SECTION A-A

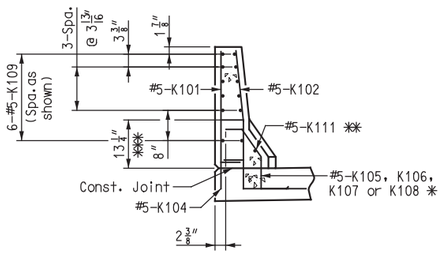

SECTION B-B

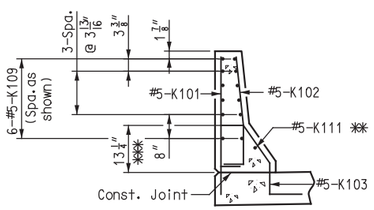

SECTION C-C

(#5-R105 or #5-R110 Bars not shown for clarity)

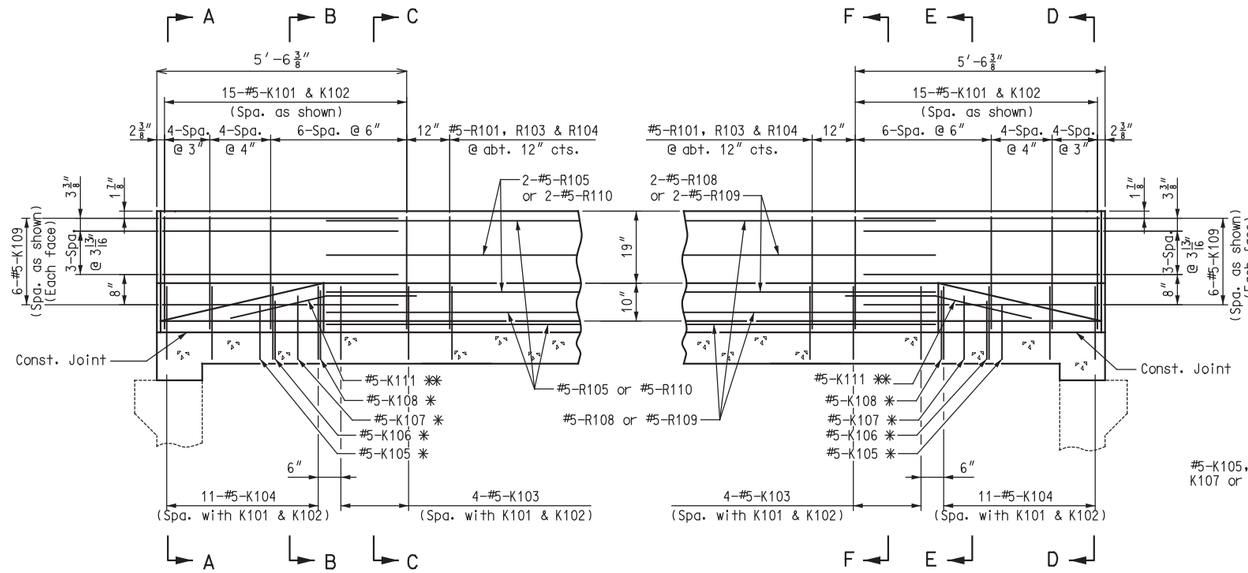

ELEVATION

ELEVATION

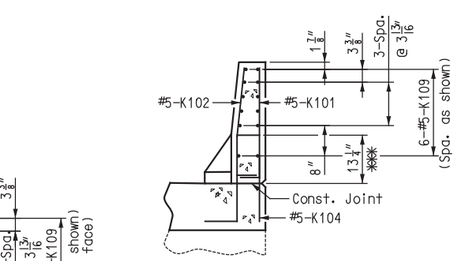

SECTION D-D

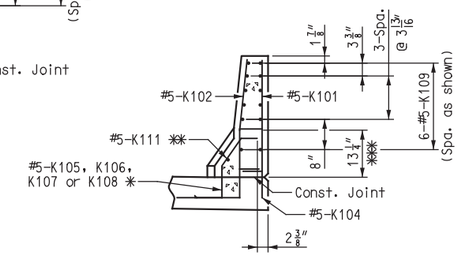

SECTION E-E

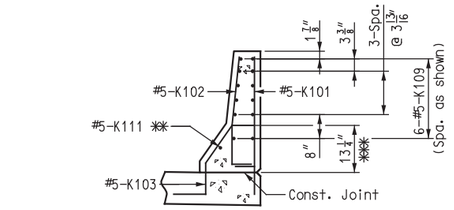

SECTION F-F

(#5-R108 or #5-R109 Bars not shown for clarity)

✱ Spaced with #5-K104 bars with bottom leg at same elevation as the bottom leg of K104 bars.

✱✱ Fit bar to follow transition face of barrier.

✱✱✱ To top of bar

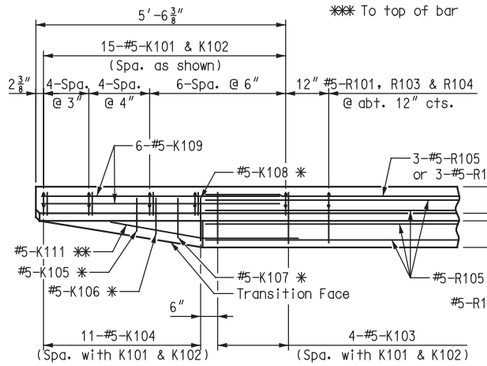

PLAN

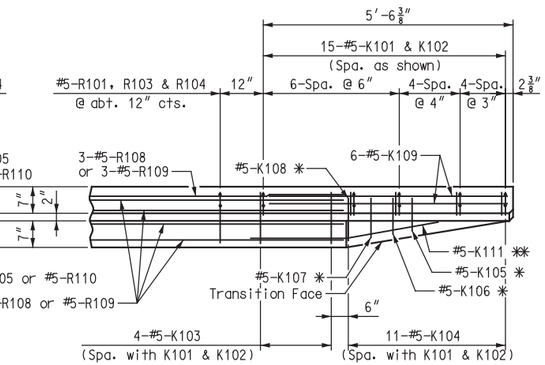

PLAN

(Left barrier shown, right barrier similar)

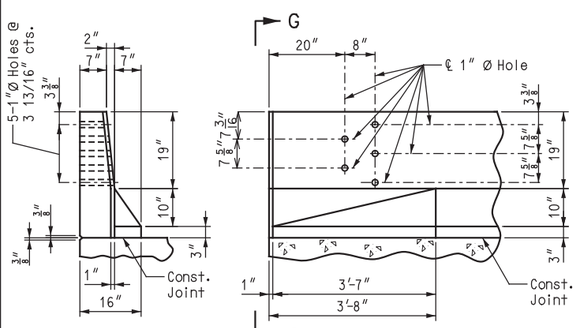

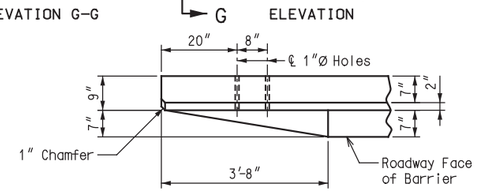

DETAILS OF GUARD RAIL ATTACHMENT

Notes:

Use a minimum lap of 3'-1" between K109 and R bars.

Concrete traffic barrier delineators shall be placed on top of the barrier as shown on Missouri Standard Plan 617.10 and in accordance with Sec 617. Delineators on bridges with two-lane, two-way traffic shall have retroreflective sheeting on both sides. Concrete traffic barrier delineators will be considered completely covered by the contract unit price for Type B Barrier.

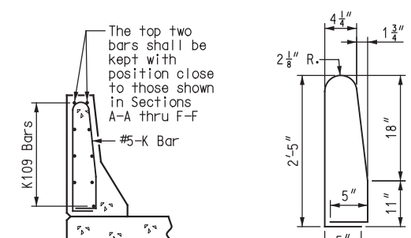

K101-K102 BAR PERMISSIBLE ALTERNATE SHAPE

(K103 or K104 thru K108 bars not shown for clarity)

The K101-K102 bar combination may be furnished as one bar as shown, at the contractor's option.

TYPE B BARRIER AT END BENTS

Detailed MAY 2020
Checked MAY 2020

Note: This drawing is not to scale. Follow dimensions.

STATE OF MISSOURI
JEFFREY B. SMITH
NUMBER E-27175
REGISTERED PROFESSIONAL ENGINEER

THIS SHEET HAS BEEN SIGNED, SEALED, AND DATED ELECTRONICALLY.

DATE	
07/17/2020	
ROUTE 169	STATE MO
DISTRICT BR	SHEET NO. 15
COUNTY GENTRY	
JOB NO. J1P3106	
CONTRACT ID.	
PROJECT NO.	
BRIDGE NO. A07291	

DESCRIPTION

DATE

IF A SEAL IS PRESENT ON THIS SHEET IT HAS BEEN ELECTRONICALLY SEALED AND DATED.

MISSOURI HIGHWAYS AND TRANSPORTATION COMMISSION
105 WEST CAPITOL
JEFFERSON CITY, MO 65102
1-888-ASK-MODOT (1-888-275-6636)

HNTB
715 KIRK DRIVE
KANSAS CITY, MO 64105-1310
TELEPHONE (816) 472-1201
CERTIFICATE OF AUTHORITY
NO. 001270

REV.

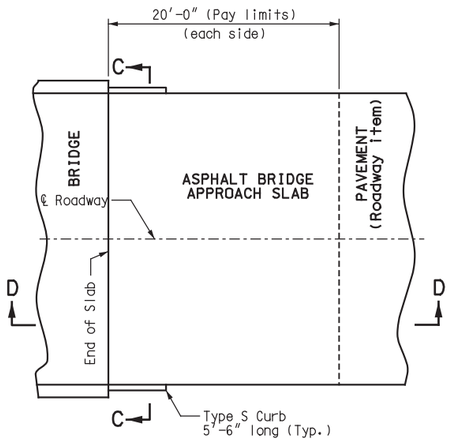

PART PLAN
(Squared structure shown,
skewed structure similar)

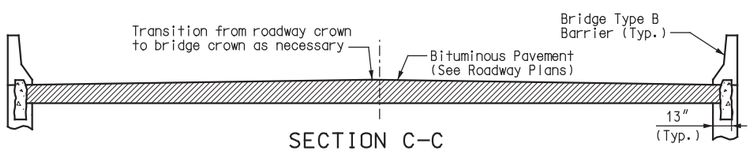

SECTION C-C

With the approval of the engineer, the contractor may crown the bottom of the approach slab to match the crown of the roadway surface.

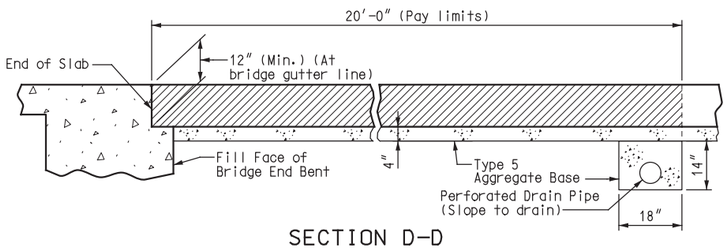

SECTION D-D

ASPHALT SLAB

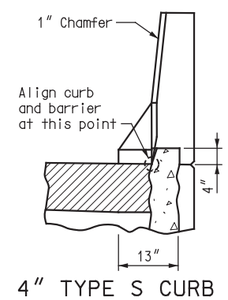

4" TYPE S CURB

See Missouri Standard Plans Drawing 609.00 for details of Type S Curb.

GENERAL NOTES:

Contractor shall use asphalt slab to construct bridge approach slab.

The contractor shall pour and satisfactorily finish the bridge slab before placing the bridge approach slab.

Drain pipe may be either 6" diameter corrugated metallic-coated pipe underdrain, 4" diameter corrugated polyvinyl chloride (PVC) drain pipe, or 4" diameter corrugated polyethylene (PE) drain pipe.

Payment for furnishing all materials, curb, labor and excavation necessary to construct the asphalt bridge approach slab, including tack, curb, underdrain and Type 5 aggregate base within the pay limits shown, complete in place, will be considered completely covered by the contract unit price for Bridge Approach Slab (Minor Road) per square yard.

Application of tack is required between lifts per Sec 403.

STATE OF MISSOURI
JEFFREY B. SMITH
NUMBER E-27175
REGISTERED PROFESSIONAL ENGINEER

THIS SHEET HAS BEEN SIGNED, SEALED, AND DATED ELECTRONICALLY.

DATE	
07/17/2020	
ROUTE 169	STATE MO
DISTRICT BR	SHEET NO. 16
COUNTY GENTRY	
JOB NO. J1P3106	
CONTRACT ID.	
PROJECT NO.	
BRIDGE NO. A07291	

DESCRIPTION	DATE

IF A SEAL IS PRESENT ON THIS SHEET IT HAS BEEN ELECTRONICALLY SEALED AND DATED.

MISSOURI HIGHWAYS AND TRANSPORTATION COMMISSION
105 WEST CAPITOL
JEFFERSON CITY, MO 65102
1-888-ASK-MODOT (1-888-275-6636)

HNTB
715 KIRK DRIVE
KANSAS CITY, MO 64105-1310
TELEPHONE (816) 472-1201
CERTIFICATE OF AUTHORITY
NO. 001270

REV.

Detailed APR 2020
Checked MAY 2020

Note: This drawing is not to scale. Follow dimensions.

DETAILS OF BRIDGE APPROACH SLAB (MINOR ROAD)

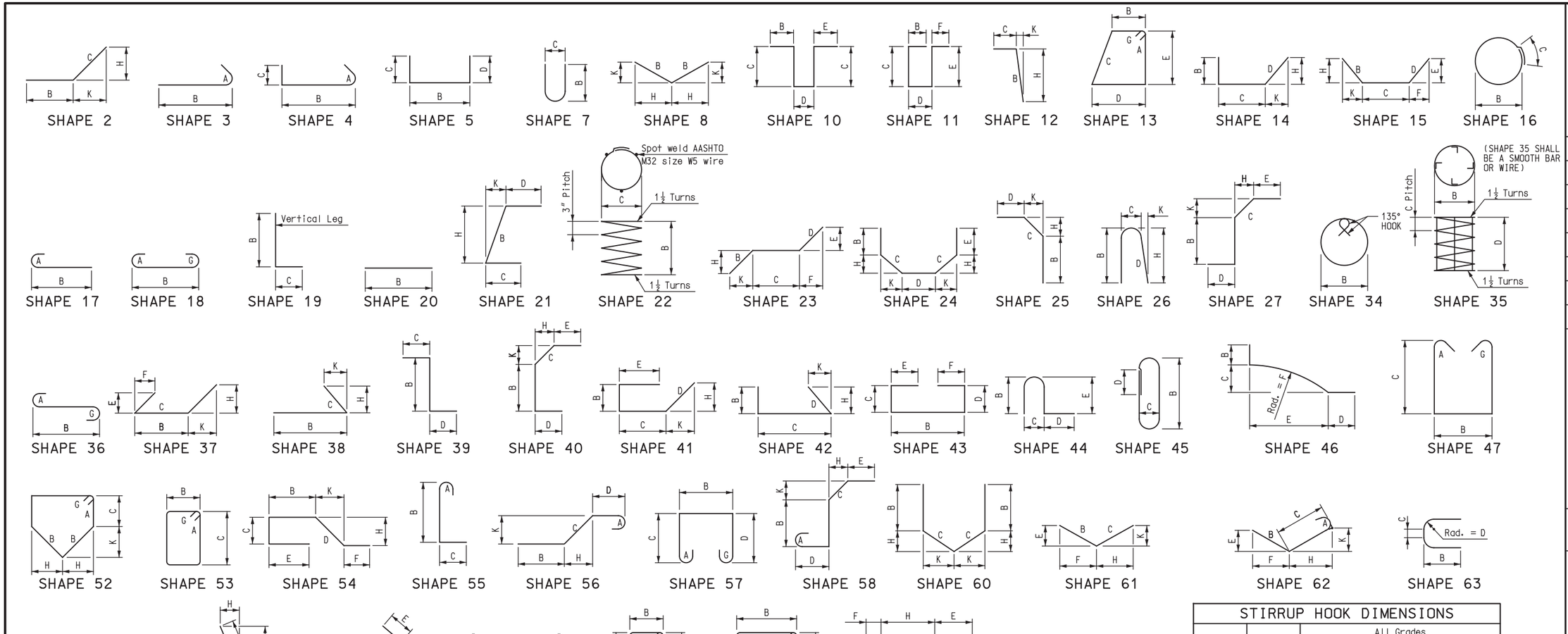

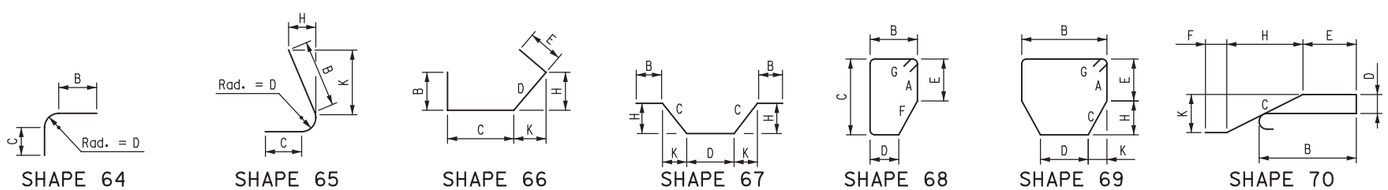

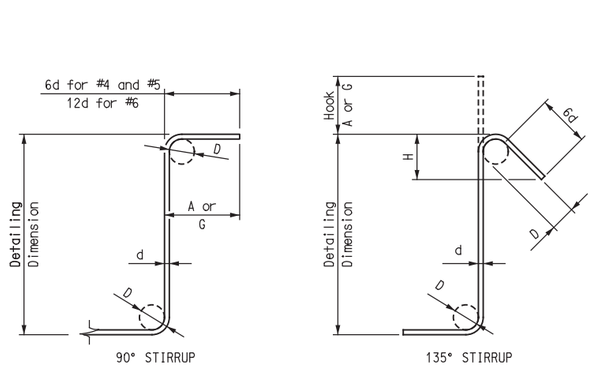

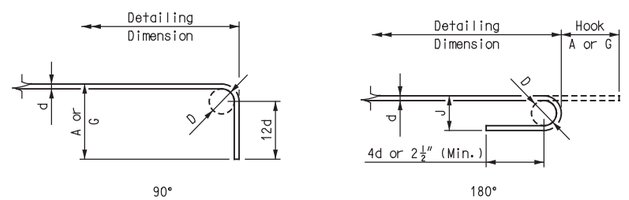

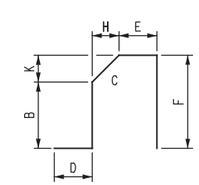

Notes:

All standard hooks and bends other than 180 degree are to be bent with same procedure as for 90 degree standard hooks.

Hooks and bends shall be in accordance with the procedures as shown on this sheet.

Nominal lengths are based on out-to-out dimensions shown in bending diagrams and are listed for fabricators use. (Nearest inch)

Pay weights are based on actual lengths.

Unless otherwise noted, diameter "D" is the same for all bends and hooks on a bar.

E = Epoxy coated reinforcement.

S = Stirrup.

X = Bar is included in substructure quantities.

V = Bar dimensions vary in equal increments between dimensions shown on this line and the following line.

No. ea. = Number of bars of each length.

Actual lengths are measured along centerline bar to the nearest inch.

Four angle or channel spacers are required for each column spiral. Spacers are to be placed on inside of spirals. Length and weight of column spirals do not include splices or spacers.

Reinforcing steel (Grade 60) fy = 60,000 psi.

STIRRUP HOOK DIMENSIONS

Bar Size	D (in)	All Grades		
		90° Hooks	135° Hooks	
		Hook A or G (in)	Hook A or G (in)	Approx. H (in)
#4	2"	4½"	4½"	3"
#5	2½"	6"	5½"	3¾"
#6	4½"	12"	8"	4½"

END HOOK DIMENSIONS

Bar Size	D (in)	All Grades		
		180° Hooks		90° Hooks
		Hook A or G (in)	J (in)	Hook A or G (in)
#3	2¼"	5"	3"	6"
#4	3"	6"	4"	8"
#5	3¾"	7"	5"	10"
#6	4½"	8"	6"	12"
#7	5¼"	10"	7"	14"
#8	6"	11"	8"	16"
#9	9½"	15"	11¾"	19"
#10	10¾"	17"	13¼"	22"
#11	12"	19"	14¾"	2'-0"
#14	18¼"	2'-3"	21¾"	2'-7"
#18	2'-0"	3'-0"	2'-4½"	3'-5"

BAR BENDING DIAGRAMS

Detailed MAY 2020
Checked MAY 2020

Note: This drawing is not to scale. Follow dimensions.

STATE OF MISSOURI
JEFFREY B. SMITH
NUMBER E-27175
REGISTERED PROFESSIONAL ENGINEER

THIS SHEET HAS BEEN SIGNED, SEALED, AND DATED ELECTRONICALLY.

DATE	
07/17/2020	
ROUTE 169	STATE MO
DISTRICT BR	SHEET NO. 17
COUNTY GENTRY	
JOB NO. J1P3106	
CONTRACT ID.	
PROJECT NO.	
BRIDGE NO. A07291	

DATE	DESCRIPTION

IF A SEAL IS PRESENT ON THIS SHEET IT HAS BEEN ELECTRONICALLY SEALED AND DATED.

MISSOURI HIGHWAYS AND TRANSPORTATION COMMISSION
105 WEST CAPITOL
JEFFERSON CITY, MO 65102
1-888-ASK-MODOT (1-888-275-6636)

HNTB
715 KIRK DRIVE
KANSAS CITY, MO 64105-1310
TELEPHONE (816) 472-1201
CERTIFICATE OF AUTHORITY
NO. 001270

REV.

BILL OF REINFORCING STEEL

NO. REQ'D.	MARK NO. SIZE	MARK NO. MARK	LOCATION	EPOXY (E)	SHAPE NO.	STIRRUP (S)	SUBSTR. (X)	VARIES (V)	NO. EACH	DIMENSIONS B FT. IN.	C FT. IN.	D FT. IN.	E FT. IN.	F FT. IN.	H FT. IN.	K FT. IN.	NOMINAL LENGTH FT. IN.	ACTUAL LENGTH FT. IN.	WEIGHT LBS.
			SUPERSTRUCTURE																
			SLAB																
1222	6S100		Slab	E	20					32′-5″							32′-5″	32′-5″	59,499
128	6S101		Slab	E	20			V	4	2′-1″							2′-1″	2′-1″	3,244
			Increment = 11½″							31′-8″							31′-8″	31′-8″	
568	5S102		Slab	E	20					56′-6″							56′-6″	56′-6″	33,472
52	6S103		Slab	E	20					42′-0″							42′-0″	42′-0″	3,280
104	6S104		Slab	E	20					27′-0″							27′-0″	27′-0″	4,218
104	6S105		Slab	E	20					44′-4″							44′-4″	44′-4″	6,925
52	6S106		Slab	E	20					43′-9″							43′-9″	43′-9″	3,417
8	6S107		Slab	E	20					40′-0″							40′-0″	40′-0″	481
88	4S108		Slab	E	5	S				11″	6″	6″					23″	21″	103
196	4S109		Slab	E	10	S				6″	6″	9″	6″				2′-9″	2′-4″	306
8	4S110		Slab	E	20					37′-0″							37′-0″	37′-0″	198
4	4S111		Slab	E	20					24′-0″							24′-0″	24′-0″	64
			TYPE B BARRIER																
72	5C100		Slip Form	E	20					10′-0″							10′-0″	10′-0″	751
60	5K101		Barrier	E	19	S				2′-5″	5⅛″						2′-11″	2′-9″	172
60	5K102		Barrier	E	14	S				5⅛″	11⅛″	18″			2″	17⅞″	2′-11″	2′-9″	172
16	5K103		Barrier	E	73	S				7″	11¼″	12″	6″	17″	6⅜″	9¼″	4′-6″	4′-1″	68
44	5K104		Barrier	E	10	S				12″	17″	6″					4′-4″	4′-0″	184
4	5K105		Barrier	E	27	S				10½″	6¾″	12″	4⅜″		4″	5½″	2′-10″	2′-7″	11
4	5K106		Barrier	E	27	S				9½″	7⅞″	12″	4⅜″		4½″	6½″	2′-10″	2′-7″	11
4	5K107		Barrier	E	27	S				8⅛″	9⅜″	12″	4⅜″		5½″	7⅞″	2′-11″	2′-7″	11
4	5K108		Barrier	E	27	S				6¾″	11¼″	12″	4⅜″		6½″	9¼″	2′-11″	2′-8″	11
48	5K109		Barrier	E	20					6′-7″							6′-7″	6′-7″	330
4	5K111		Barrier	E	8	S				2′-2⅛″					2′-2″	2⅜″	4′-5″	4′-5″	18
858	5R101		Barrier	E	26	S				2′-6″	4″	2′-6⅛″			2′-6″	3″	5′-2″	5′-2″	4,624
112	5R102		Barrier	E	20					9′-8″							9′-8″	9′-8″	1,129
858	5R103		Barrier	E	19	S				17″	6″						23″	22″	1,641
858	5R104		Barrier	E	27	S				7″	11¼″	12″	6″		6⅜″	9¼″	3′-1″	2′-9″	2,461
7	5R105		Barrier	E	20					45′-6″							45′-6″	45′-6″	332
56	5R106		Barrier	E	20					36′-5″							36′-5″	36′-5″	2,127
28	5R107		Barrier	E	20					48′-11″							48′-11″	48′-11″	1,429
14	5R108		Barrier	E	20					31′-4″							31′-4″	31′-4″	458
14	5R109		Barrier	E	20					31′-10″							31′-10″	31′-10″	465
7	5R110		Barrier	E	20					44′-6″							44′-6″	44′-6″	325

BILL OF REINFORCING STEEL

NO. REQ'D.	MARK NO. SIZE	MARK NO. MARK	LOCATION	EPOXY (E)	SHAPE NO.	STIRRUP (S)	SUBSTR. (X)	VARIES (V)	NO. EACH	DIMENSIONS B FT. IN.	C FT. IN.	D FT. IN.	E FT. IN.	F FT. IN.	H FT. IN.	K FT. IN.	NOMINAL LENGTH FT. IN.	ACTUAL LENGTH FT. IN.	WEIGHT LBS.
			TOTALS																
	4			E															671
	5			E															50,129
	6			E															80,823
			SLAB ON STEEL																
	4			E															671
	5			E															33,472
	6			E															81,064
			TYPE B BARRIER																
	5			E															15,979
			TOTAL	E															15,979
			SLIP FORM OPTION																
	5			E															751
			TOTAL	E															751

Note: For bar bending diagram, see Sheet No. 17.

BILL OF REINFORCING STEEL

Detailed MAY 2020
Checked MAY 2020

Note: This drawing is not to scale. Follow dimensions.

STATE OF MISSOURI
JEFFREY B. SMITH
NUMBER E-27175
REGISTERED PROFESSIONAL ENGINEER

THIS SHEET HAS BEEN SIGNED, SEALED, AND DATED ELECTRONICALLY.

DATE 07/17/2020
ROUTE 169 | STATE MO
DISTRICT BR | SHEET NO. 18
COUNTY GENTRY
JOB NO. J1P3106
CONTRACT ID.
PROJECT NO.
BRIDGE NO. A07291

DESCRIPTION | DATE

IF A SEAL IS PRESENT ON THIS SHEET IT HAS BEEN ELECTRONICALLY SEALED AND DATED.

MISSOURI HIGHWAYS AND TRANSPORTATION COMMISSION
105 WEST CAPITOL
JEFFERSON CITY, MO 65102
1-888-ASK-MODOT (1-888-275-6636)

HNTB
715 KIRK DRIVE
KANSAS CITY, MO 64105-1310
TELEPHONE (816) 472-1201
CERTIFICATE OF AUTHORITY
NO. 001270

REV.

DESIGN DESIGNATION

A.A.D.T. - 2020 = 82
A.A.D.T. - 2040 = 107
T = 12%
V = 35 M.P.H.
D = 50%

FUNCTIONAL CLASSIFICATION - MAJOR COLLECTOR

NO RIGHT-OF-WAY ACQUISITION

MISSOURI HIGHWAYS AND TRANSPORTATION COMMISSION
PLANS FOR PROPOSED
STATE HIGHWAY

HARRISON COUNTY

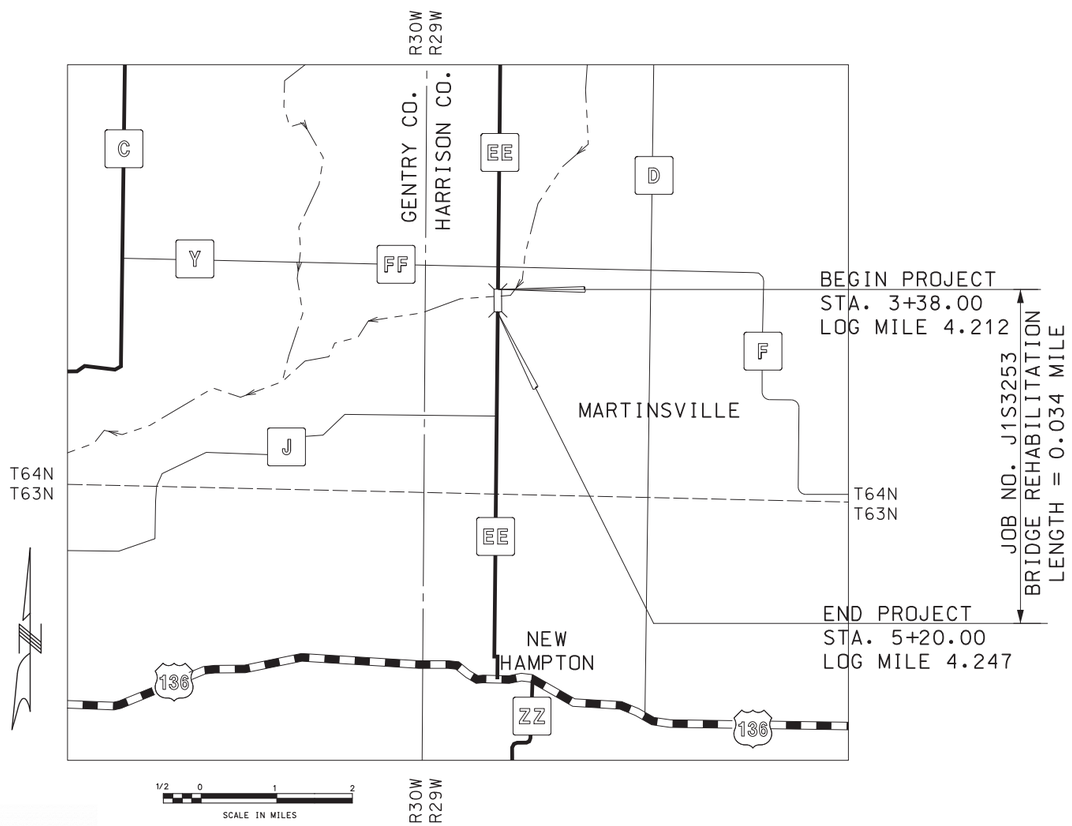

THE EXISTENCE AND APPROXIMATE LOCATION OF UTILITY FACILITIES KNOWN TO EXIST, AS SHOWN ON THE PLANS, ARE BASED ON THE BEST INFORMATION AVAILABLE TO THE COMMISSION AT THIS TIME. THIS INFORMATION IS PROVIDED BY THE COMMISSION "AS-IS" AND THE COMMISSION EXPRESSLY DISCLAIMS ANY REPRESENTATION OR WARRANTY AS TO THE COMPLETENESS, ACCURACY, OR SUITABILITY OF THE INFORMATION FOR ANY USE. RELIANCE UPON THIS INFORMATION IS DONE AT THE RISK AND PERIL OF THE USER, AND THE COMMISSION SHALL NOT BE LIABLE FOR ANY DAMAGES THAT MAY ARISE FROM ANY ERROR IN THE INFORMATION. IT IS, THEREFORE, THE RESPONSIBILITY OF THE CONTRACTOR TO VERIFY THE EXISTENCE, LOCATION AND STATUS OF ANY FACILITY. SUCH VERIFICATION INCLUDES DIRECT CONTACT WITH THE LISTED UTILITIES.

CONVENTIONAL SYMBOLS
(USED IN PLANS)

	EXISTING	NEW
BUILDINGS AND STRUCTURES		
GUARD RAIL		
GUARD CABLE		
CONCRETE RIGHT-OF-WAY MARKER		
STEEL RIGHT-OF-WAY MARKER		
LOCATION SURVEY MARKER		
UTILITIES		
FIBER OPTICS	-FO-	-FO-
OVERHEAD CABLE TV	-OTV-	-OTV-
UNDERGROUND CABLE TV	-UTV-	-UTV-
OVERHEAD TELEPHONE	-OT-	-OT-
UNDERGROUND TELEPHONE	-UT-	-UT-
OVERHEAD POWER	-OE-	-OE-
UNDERGROUND POWER	-UE-	-UE-
SANITARY SEWER	-S-	-S-
STORM SEWER	-SS-	-SS-
GAS	-G-	-G-
WATER	-W-	-W-
MANHOLE	SAN	
FIRE HYDRANT	HYD	
WATER VALVE	WV	
WATER METER	WM	
DROP INLET	D	
DITCH BLOCK		
GROUND MOUNTED SIGN	SIGN	
LIGHT POLE		
H-FRAME POWER POLE		
TELEPHONE PEDESTAL	PED	
FENCE		
CHAIN LINK	-V-	
WOVEN WIRE	-X-	
GATE POST		
BENCHMARK	BM	

NOTE: DASHED OR OPEN SYMBOLS INDICATE EXISTING FEATURES

INDEX OF SHEETS

DESCRIPTION	SHEET NUMBER
TITLE SHEET	1
TYPICAL SECTIONS (TS) (1 SHEET)	2
QUANTITIES (QU) (2 SHEETS)	3
PLAN-PROFILE (PP)	4
REFERENCE POINTS (RP)	5
COORDINATE POINTS (CP)	6
TRAFFIC CONTROL SHEET (TC)	7
EROSION CONTROL SHEET (EC)	8
SIGNING AND PAVEMENT MARKING (SN)	9
BRIDGE DRAWINGS (B)	
R00751	1-14

LENGTH OF PROJECT

BEGINNING OF PROJECT	STA.	3+38.00	
END OF PROJECT	STA.	5+20.00	
APPARENT LENGTH		182.00	FEET
EQUATIONS AND EXCEPTIONS:		NONE	
TOTAL CORRECTIONS		0.00	FEET
NET LENGTH OF PROJECT		182.00	FEET
STATE LENGTH		0.034	MILES
FOR INFORMATION ONLY ESTIMATED DISTURBED ACRES		0.1	ACRES

STATE OF MISSOURI
LISA BELLE MOSLEY
NUMBER PE-2004005376
PROFESSIONAL ENGINEER

THIS SHEET HAS BEEN SIGNED, SEALED AND DATED ELECTRONICALLY.

DATE PREPARED: 07/17/2020

ROUTE	STATE
EE	MO
DISTRICT	SHEET NO.
NW	1

COUNTY: HARRISON
JOB NO.: J1S3253
CONTRACT ID.:
PROJECT NO.:
BRIDGE NO.:

DATE	DESCRIPTION

IF A SEAL IS PRESENT ON THIS SHEET IT HAS BEEN ELECTRONICALLY SEALED AND DATED.

MISSOURI HIGHWAYS AND TRANSPORTATION COMMISSION
105 WEST CAPITOL
JEFFERSON CITY, MO 65102
1-888-ASK-MODOT (1-888-275-6636)

HNTB
715 KIRK DRIVE
KANSAS CITY, MO 64105-1310
TELEPHONE (816) 472-1201
CERTIFICATE OF AUTHORITY
NO. 001270

REV.

OPTIONAL PAVEMENT

ASPHALT DESIGN
$1\frac{3}{4}''$ BITUMINOUS PAVEMENT MIXTURE PG64-22 (BP-1)
$5\frac{1}{4}''$ BITUMINOUS PAVEMENT MIXTURE PG64-22 (BASE)

CONCRETE DESIGN
7″ JPCP 15′ JOINTS WITH $1\frac{1}{4}''$ DOWELS

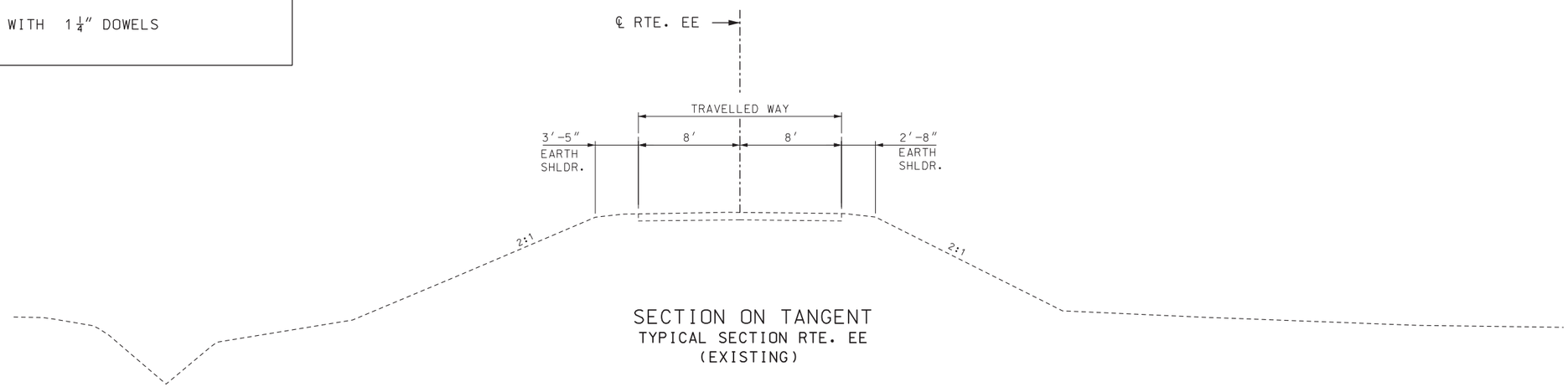

SECTION ON TANGENT
TYPICAL SECTION RTE. EE
(EXISTING)

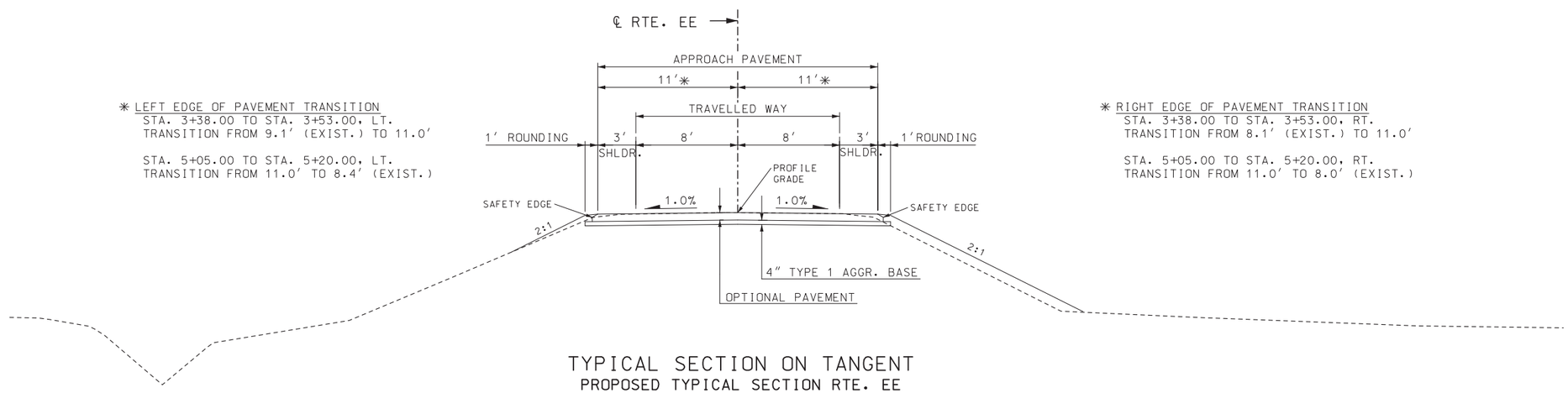

✳ LEFT EDGE OF PAVEMENT TRANSITION
STA. 3+38.00 TO STA. 3+53.00, LT.
TRANSITION FROM 9.1′ (EXIST.) TO 11.0′

STA. 5+05.00 TO STA. 5+20.00, LT.
TRANSITION FROM 11.0′ TO 8.4′ (EXIST.)

✳ RIGHT EDGE OF PAVEMENT TRANSITION
STA. 3+38.00 TO STA. 3+53.00, RT.
TRANSITION FROM 8.1′ (EXIST.) TO 11.0′

STA. 5+05.00 TO STA. 5+20.00, RT.
TRANSITION FROM 11.0′ TO 8.0′ (EXIST.)

TYPICAL SECTION ON TANGENT
PROPOSED TYPICAL SECTION RTE. EE
STA. 3+38.00 TO STA. 3+78.00
STA. 4+80.13 TO STA. 5+20.00

NOTES:

EXISTING CUT/FILL SLOPES INDICATED ON THE TYPICAL SECTION ARE BASED ON THE BEST AVAILABLE DATA. EXISTING CONDITIONS MAY VARY AND SHOULD BE CONFIRMED IN THE FIELD.

NOT TO SCALE

TYPICAL SECTION
SHEET 1 OF 1

STATE OF MISSOURI
LISA BELLE MOSLEY
NUMBER PE-2004005376
PROFESSIONAL ENGINEER

THIS SHEET HAS BEEN SIGNED, SEALED AND DATED ELECTRONICALLY.

DATE PREPARED	07/17/2020
ROUTE	EE
STATE	MO
DISTRICT	NW
SHEET NO.	2
COUNTY	HARRISON
JOB NO.	J1S3253
CONTRACT ID.	
PROJECT NO.	
BRIDGE NO.	

DATE	DESCRIPTION

IF A SEAL IS PRESENT ON THIS SHEET IT HAS BEEN ELECTRONICALLY SEALED AND DATED.

MISSOURI HIGHWAYS AND TRANSPORTATION COMMISSION
105 WEST CAPITOL
JEFFERSON CITY, MO 65102
1-888-ASK-MODOT (1-888-275-6636)

HNTB
715 KIRK DRIVE
KANSAS CITY, MO 64105-1310
TELEPHONE (816) 472-1201
CERTIFICATE OF AUTHORITY
NO. 001270

REV.

002_TS_J1S3253_I5.dgn 12:09:45 PM 7/13/2020

REMOVAL OF IMPROVEMENTS

SHT.	STA.	STA.	LOCATION	SIDE	DESCRIPTION	QUANTITY	UNITS
4	3+38	3+38	RTE. EE	LT./RT.	SAWCUT	17	FT
4	5+20	5+20	RTE. EE	LT./RT.	SAWCUT	16	FT
4	3+38	3+78	RTE. EE	LT./RT.	REMOVE EXISTING PAVEMENT	78	SY
4	4+80	5+20	RTE. EE	LT./RT.	REMOVE EXISTING PAVEMENT	77	SY
4	3+67	3+67	RTE. EE	RT.	REMOVE RTE. EE SIGN POST	1	EA
4	3+79	3+79	RTE. EE	RT.	REMOVE OBJECT MARKER SIGN POST	1	EA
4	3+79	3+79	RTE. EE	LT.	REMOVE OBJECT MARKER SIGN POST	1	EA
4	4+79	4+79	RTE. EE	RT.	REMOVE OBJECT MARKER SIGN POST	1	EA
4	4+79	4+79	RTE. EE	LT.	REMOVE OBJECT MARKER SIGN POST	1	EA
9	SOUTH OF PROJECT		RTE. EE	RT.	REMOVE WEIGHT RESTRICTION SIGN	1	EA
						1	LUMP SUM

MOBILIZATION

1 LUMP SUM

CONTRACTOR FURNISHED SURVEYING AND STAKING

1 LUMP SUM

STANDARD WATERBORNE PAVEMENT MARKING PAINT AND REMOVAL

SHT.	STA.	STA.	LOCATION	PAVEMENT MARKING REMOVAL (LF)	TYPE P BEADS 4" YELLOW INTERMITTENT (LF)
9	3+38.00	5+20.00	RTE. EE	--	46
9	2+56.00	3+38.00	RTE. EE	82	--
9	2+54.00	3+38.00	RTE. EE	84	--
9	5+20.00	6+90.00	RTE. EE	170	--
9	5+20.00	7+08.00	RTE. EE	188	--
			TOTALS	524	46

PAVEMENT SUMMARY

SHT.	STA.	STA.	LOCATION	7" OPTIONAL PAVEMENT (SY)	TYPE 1 AGGREGATE BASE (4") (SY)
4	3+38.00	3+78.00	RTE. EE	93.8	103
4	4+80.13	5+20.00	RTE. EE	92.8	102
			TOTALS	186.6	205

LINEAR GRADING, CLASS 1

STA.	STA.	LOCATION	LENGTH (LF)	STATIONS
3+38.00	3+78.00	RTE. EE	40	0.4
4+80.13	5+20.00	RTE. EE	40	0.4
			SUBTOTAL	0.8
			TOTAL	1

RELOCATING AND MOUNTING EXISTING SIGNS TO NEW POSTS

SHT.	STA.	LOCATION	QUANTITY (EACH)	REMARKS
9	3+67	RTE. EE	1	SIGN POST - #1
9	3+79	RTE. EE	1	SIGN POST - #2
9	3+79	RTE. EE	1	SIGN POST - #3
9	4+79	RTE. EE	1	SIGN POST = #4
9	4+79	RTE. EE	1	SIGN POST = #5
		TOTAL	5	

PERMANENT SLOPE PROTECTION

SHT.	STA.	STA.	LOCATION	AREA (SF)	DEPTH (FT.)	TYPE 2 ROCK BLANKET FURNISHING (CY)	TYPE 2 ROCK BLANKET PLACING (CY)	PERMANENT EROSION CONTROL GEOTEXTILE (SY)
4	3+78	4+06	NORTH ABUTMENT	1,660	2	123	123	184
4	4+38	4+80	SOUTH ABUTMENT	3,570	2	264	264	396
					TOTALS	387	387	581

EROSION CONTROL

SHT.	STA.	STA.	LOCATION	SIDE	SILT FENCE (LF)	ROCK DITCH CHECK (LF)	SEDIMENT REMOVAL (CY)	TYPE 1D EROSION CONTROL BLANKET (SY)	COOL SEASON MIXTURE SEEDING (ACRE)	TEMPORARY SEEDING AND MULCHING (ACRE)
8	3+38	3+78	RTE. EE	LT.	--	--	--	95	0.03	0.03
8	3+38	3+78	RTE. EE	RT.	--	--	--	94	0.02	0.02
8	3+38	4+06	RTE. EE	BOTH	187	--	2	--	--	--
8	4+37	5+20	RTE. EE	BOTH	217	--	2	--	--	--
8	4+47	4+79	RTE. EE	LT.	--	50	1	--	--	--
8	4+80	5+20	RTE. EE	LT.	--	--	--	95	0.03	0.03
8	4+80	5+20	RTE. EE	RT.	--	--	--	94	0.03	0.03
				TOTALS	404	50	5	378	1.0	0.1

SUMMARY OF QUANTITIES
SHEET 1 OF 2

STATE OF MISSOURI
LISA BELLE MOSLEY
NUMBER PE-2004005376
PROFESSIONAL ENGINEER

THIS SHEET HAS BEEN SIGNED, SEALED AND DATED ELECTRONICALLY.

DATE PREPARED 07/17/2020
ROUTE EE | STATE MO
DISTRICT NW | SHEET NO. 3
COUNTY HARRISON
JOB NO. J1S3253
CONTRACT ID.
PROJECT NO.
BRIDGE NO.

DATE	DESCRIPTION

IF A SEAL IS PRESENT ON THIS SHEET IT HAS BEEN ELECTRONICALLY SEALED AND DATED.

MISSOURI HIGHWAYS AND TRANSPORTATION COMMISSION
105 WEST CAPITOL
JEFFERSON CITY, MO 65102
1-888-ASK-MODOT (1-888-275-6636)

HNTB
715 KIRK DRIVE
KANSAS CITY, MO 64105-1310
TELEPHONE (816) 472-1201
CERTIFICATE OF AUTHORITY
NO. 001270

REV.

SIGN	SIZE IN.	AREA SQ.FT.	QTY EACH	TOTAL AREA SQ.FT.	QTY RELOC EACH	TOTAL RELOC SQ.FT.	SIGN NUM.	DESCRIPTION
WARNING SIGNS								
W01-1L	48X48	16.00						TURN (SYMBOL LEFT ARROW)
W01-1R	48X48	16.00						TURN (SYMBOL RIGHT ARROW)
W01-2L	48X48	16.00						CURVE (SYMBOL LEFT ARROW)
W01-2R	48X48	16.00						CURVE (SYMBOL RIGHT ARROW)
W01-3L	48X48	16.00						REVERSE TURN (SYMBOL LEFT ARROW)
W01-3R	48X48	16.00						REVERSE TURN (SYMBOL RIGHT ARROW)
W01-4L	48X48	16.00						REVERSE CURVE (SYMBOL LEFT ARROW)
W01-4R	48X48	16.00						REVERSE CURVE (SYMBOL RIGHT ARROW)
W01-4bL	48X48	16.00						DOUBLE ARROW REVERSE CURVE (SYMBOL LT ARROWS)
W01-4bR	48X48	16.00						DOUBLE ARROW REVERSE CURVE (SYMBOL RT ARROWS)
W01-4cL	48X48	16.00						TRIPLE ARROW REVERSE CURVE (SYMBOL LT ARROWS)
W01-4cR	48X48	16.00						TRIPLE ARROW REVERSE CURVE (SYMBOL RT ARROWS)
W01-6	60X30	12.50						HORIZONTAL ARROW (SYMBOL)
W01-6a	72X36	18.00						HORIZ. ARROW (SYMBOL ON PERMANENT BARRICADE)
W01-7	60X30	12.50						DOUBLE HEAD HORIZONTAL ARROW (SYMBOL)
W01-7a	72X36	18.00						DOUBLE HEAD HORIZ. ARROW (SYMBOL ON PERM. BARR.)
W01-8	18X24	3.00						CHEVRON (SYMBOL)
W01-8a	30X36	7.50						CHEVRON (SYMBOL FOR DIVIDED HIGHWAYS)
W03-1	48X48	16.00						STOP AHEAD (SYMBOL)
W03-2	48X48	16.00						YIELD AHEAD (SYMBOL)
W03-3	48X48	16.00						SIGNAL AHEAD (SYMBOL)
W03-4	48X48	16.00						BE PREPARED TO STOP
W03-5	48X48	16.00						SPEED LIMIT AHEAD
W04-1L	48X48	16.00						MERGE (SYMBOL FROM LEFT)
W04-1R	48X48	16.00						MERGE (SYMBOL FROM RIGHT)
W04-1aL	48X48	16.00						MERGE (ARROW SYMBOL)
W04-1aR	48X48	16.00						MERGE (ARROW SYMBOL)
W05-1	48X48	16.00						ROAD/BRIDGE/RAMP NARROWS
W05-3	48X48	16.00						ONE LANE BRIDGE
W05-5	48X48	16.00						NARROW LANES
W06-1	48X48	16.00						DIVIDED HIGHWAY (SYMBOL)
W06-2	48X48	16.00						DIVIDED HIGHWAY END (SYMBOL)
W06-3	48X48	16.00						TWO WAY TRAFFIC (SYMBOL)
W07-3a	30X24	5.00						NEXT XX MILES (PLAQUE)
W08-1	48X48	16.00						BUMP
W08-2	48X48	16.00						DIP
W08-3	48X48	16.00						PAVEMENT ENDS
W08-4	48X48	16.00						SOFT SHOULDER
W08-5	48X48	16.00						SLIPPERY WHEN WET (SYMBOL)
W08-6	48X48	16.00						TRUCK CROSSING
W08-6c	48X48	16.00						TRUCK ENTRANCE
W08-7	36X36	9.00						LOOSE GRAVEL
W08-7a	36X36	9.00						FRESH OIL/LOOSE GRAVEL
W08-9	48X48	16.00						LOW SHOULDER
W08-11	48X48	16.00						UNEVEN LANES
W08-12	48X48	16.00						NO CENTER LINE
W08-15	48X48	16.00						GROOVED PAVEMENT
W08-15P	30X24	5.00						MOTORCYCLE (PLAQUE)
W08-17	48X48	16.00						SHOULDER DROP-OFF (SYMBOL)
W08-17P	30X24	5.00						SHOULDER DROP-OFF (PLAQUE)
W10-1	42RND.	9.62						RAILROAD CROSSING
W012-1	24X24	4.00						DOUBLE DOWN ARROW (SYMBOL)
W012-2	48X48	16.00						LOW CLEARANCE (SYMBOL)
W012-2X	24X18	3.00						LOW CLEARANCE (PLAQUE)
W012-2a	84X24	14.00						OVERHEAD LOW CLEARANCE (FEET AND INCHES)
W012-4	120X60	50.00						LOW CLEARANCE XX FT XX IN XX MILES AHEAD
W012-5	120X60	50.00						WIDTH RESTRICTION XX FT XX IN XX MILES AHEAD
W013-1	30X30	6.25						ADVISORY SPEED (PLAQUE)
W016-2	30X24	5.00						XXX FEET (PLAQUE)
W016-3	30X24	5.00						X MILE (PLAQUE)
W020-1	48X48	16.00						ROAD/BRIDGE/RAMP WORK AHEAD
W020-2	48X48	16.00						DETOUR AHEAD
W020-3	48X48	16.00	2	32.0			20	ROAD CLOSED AHEAD
W020-3a	48X48	16.00	2	32.0			20A	ROAD CLOSED XXX FT
W020-4	48X48	16.00						ONE LANE ROAD AHEAD
W020-5	48X48	16.00						RIGHT/CENTER/LEFT LANE CLOSED AHEAD
W020-6a	48X48	16.00						RIGHT/CENTER/LEFT LANE CLOSED
W020-7a	48X48	16.00						FLAGGER (SYMBOL) WITH FLAGS
W021-2	36X36	9.00						FRESH OIL
W021-5	48X48	16.00						SHOULDER WORK AHEAD
W022-1	48X48	16.00						BLASTING ZONE AHEAD
W022-2	42X36	10.50						TURN OFF 2-WAY RADIO AND PHONE
W022-3	42X36	10.50						END BLASTING ZONE
G022-1	21X15	2.19						WET PAINT (ARROW PIVOTS)

SIGN	SIZE IN.	AREA SQ.FT.	QTY EACH	TOTAL SQ.FT.	QTY RELOC EACH	TOTAL RELOC SQ.FT.	SIGN NUM.	DESCRIPTION
GUIDE SIGNS								
E05-1	36X48	12.00						GORE EXIT
E05-2	48X36	12.00						EXIT OPEN
E05-2a	48X36	12.00						EXIT CLOSED
G020-1	60X24	10.00						ROAD WORK NEXT XX MILES
G020-2	48X24	8.00						END ROAD WORK
G020-4	36X18	4.50						PILOT CAR FOLLOW ME
G020-4a	42X30	8.75						PILOT CAR IN USE WAIT & FOLLOW
G020-4a	18X12	1.50						PILOT CAR IN USE WAIT & FOLLOW
G020-5aP	36X24	6.00						WORK ZONE (PLAQUE)
M04-8a	24X18	3.00						END DETOUR
M04-9L	48X36	12.00						DETOUR (LEFT ARROW)
M04-9R	48X36	12.00						DETOUR (RIGHT ARROW)
M04-9P	48X12	4.00						STREET NAME (PLAQUE)
M04-10L	48X18	6.00						DETOUR (ARROW LEFT)
M04-10R	48X18	6.00						DETOUR (ARROW RIGHT)
REGULATORY SIGNS								
R1-1	48X48	13.25						STOP
R1-2	48TRI.	6.93						YIELD
R1-2a	36X36	9.00						TO ONCOMING TRAFFIC (PLAQUE)
R1-3P	30X12	2.50						ALL WAY (PLAQUE)
R2-1	36X48	12.00						SPEED LIMIT XX
R3-1	48X48	16.00						NO RIGHT TURN (SYMBOL)
R3-2	48X48	16.00						NO LEFT TURN (SYMBOL)
R3-3	36X36	9.00						NO TURNS
R3-4	48X48	16.00						NO U-TURN (SYMBOL)
R3-7L	30X30	6.25						LEFT LANE MUST TURN LEFT
R3-7R	30X30	6.25						RIGHT LANE MUST TURN RIGHT
R4-1	36X48	12.00						DO NOT PASS
R4-2	36X48	12.00						PASS WITH CARE
R4-8a	36X48	12.00						KEEP LEFT (HORIZONTAL ARROW)
R4-7a	36X48	12.00						KEEP RIGHT (HORIZONTAL ARROW)
R5-1	30X30	6.25						DO NOT ENTER
R5-1a	36X24	6.00						WRONG WAY
R6-1L	54X18	6.75						ONE WAY ARROW (LEFT)
R6-1R	54X18	6.75						ONE WAY ARROW (RIGHT)
R6-2L	24X30	5.00						ONE WAY (LEFT)
R6-2R	24X30	5.00						ONE WAY (RIGHT)
R9-9	24X12	2.00						SIDEWALK CLOSED
R9-11L	24X18	3.00						SIDEWALK CLOSED AHEAD, (ARROW LEFT) CROSS HERE
R9-11R	24X18	3.00						SIDEWALK CLOSED AHEAD, (ARROW RIGHT) CROSS HERE
R10-6	24X36	6.00						STOP HERE ON RED (45° ARROW)
R11-2	48X30	10.00	2	20.0			29	ROAD CLOSED
R11-3a	60X30	12.50	2	25.0			55	ROAD CLOSED XX MILES AHEAD LOCAL TRAFFIC ONLY
R11-4	60X30	12.50						ROAD CLOSED TO THRU TRAFFIC
CONST-3A	60X48	20.00						FINE SIGN
CONST-3X	56X12	4.67						SPEEDING/PASSING (PLATE)
MISCELLANEOUS SIGNS								
CONST-5	48X36	12.00						POINT OF PRESENCE
CONST-5	96X48	32.00						POINT OF PRESENCE
CONST-7	48X24	8.00						RATE OUR WORK ZONE
CONST-7	72X36	18.00						RATE OUR WORK ZONE
CONST-8	48X36	12.00						WORK ZONE NO PHONE ZONE

616-10.05 CONSTRUCTION SIGNS	TOTAL	109
616-10.10 RELOCATED SIGNS	TOTAL	0

ITEM NUMBER	TOTAL QTY	DESCRIPTION
6122008		IMPACT ATTENUATOR 40 MPH (SAND BARRELS)
6122009		IMPACT ATTENUATOR 45 MPH (SAND BARRELS)
6122010		IMPACT ATTENUATOR 50 MPH (SAND BARRELS)
6122012		IMPACT ATTENUATOR 55 MPH (SAND BARRELS)
6122014		IMPACT ATTENUATOR 60 MPH (SAND BARRELS)
6122017		IMPACT ATTENUATOR 65 MPH (SAND BARRELS)
6122019		IMPACT ATTENUATOR 70 MPH (SAND BARRELS)
6122020		REPLACEMENT SAND BARREL
6122030		IMPACT ATTENUATOR (RELOCATION)
6123000A		TRUCK OR TRAILER MOUNTED ATTENUATOR (TMA)
6161007		SPEED LIMIT AND STROBE LIGHT ASSEMBLY
6161008	2	ADVANCED WARNING RAIL SYSTEM
6161009		FLAG ASSEMBLY
6161012		BUOYS (BOATS KEEP OUT)
6161013		BUOYS (NO WAKE)
6161014		SPECIAL SIGN ASSEMBLY (BOATS KEEP OUT)
6161024		CHANNELIZER (TRIM LINE) WITH LIGHT
6161025		CHANNELIZER (TRIM LINE)
6161030		TYPE III MOVEABLE BARRICADE
6161031	6	TYPE III MOVEABLE BARRICADE WITH LIGHTS
6161033		DIRECTION INDICATOR BARRICADE
6161034		DIRECTION INDICATOR BARRICADE, WITH LIGHT
6161040		FLASHING ARROW PANEL
6161047		TYPE III OBJECT MARKER
6161052		WARNING LIGHT, TYPE B
6161055		SEQUENTIAL FLASHING WARNING LIGHT
6161070		TUBULAR MARKER
6161095		RADAR SPEED ADVISORY SYSTEM
6161096		CHANGEABLE MESSAGE SIGN, COMMISSION FURNISHED/RETAINED
6161098A		CHANGEABLE MESSAGE SIGN W/O COMM. INTERFACE, CONTRACTOR FURNISHED/RETAINED
6161099		CHANGEABLE MESSAGE SIGN WITH COMM. INTERFACE, CONTRACTOR FURNISHED/RETAINED
6162000A		WORK ZONE TRAFFIC SIGNAL SYSTEM
6162002		TEMPORARY LONG-TERM RUMBLE STRIPS
6162004		TEMPORARY SHORT-TERM RUMBLE STRIPS
6173600D		TEMPORARY TRAFFIC BARRIER CONTRACTOR FURNISHED/RETAINED
6173602B		TEMPORARY TRAFFIC BARRIER CONTRACTOR FURNISHED/COMMISSION RETAINED
6174000A		TEMP. TRAFFIC BARRIER HEIGHT TRANSITION
6175010A		RELOCATING TEMPORARY TRAFFIC BARRIER
6176000B		TEMPORARY TRAFFIC BARRIER COMMISSION FURNISHED/RETAINED
6177000B		TEMP. TRAFFIC BARRIER HEIGHT TRANSITION COMMISSION FURNISHED/RETAINED
6208064A		TEMPORARY RAISED PAVEMENT MARKER
9029400		TEMPORARY TRAFFIC SIGNALS
9029401		TEMPORARY TRAFFIC SIGNALS AND LIGHTING

SUMMARY OF QUANTITIES
SHEET 2 OF 2

STATE OF MISSOURI
LISA BELLE MOSLEY
NUMBER PE-2004005376
PROFESSIONAL ENGINEER

THIS SHEET HAS BEEN SIGNED, SEALED AND DATED ELECTRONICALLY.

DATE PREPARED 07/17/2020
ROUTE EE | STATE MO
DISTRICT NW | SHEET NO. 3
COUNTY HARRISON
JOB NO. J1S3253
CONTRACT ID.
PROJECT NO.
BRIDGE NO.

DESCRIPTION | DATE

IF A SEAL IS PRESENT ON THIS SHEET IT HAS BEEN ELECTRONICALLY SEALED AND DATED.

MISSOURI HIGHWAYS AND TRANSPORTATION COMMISSION
105 WEST CAPITOL
JEFFERSON CITY, MO 65102
1-888-ASK-MODOT (1-888-275-6636)

HNTB
715 KIRK DRIVE
KANSAS CITY, MO 64105-1310
TELEPHONE (816) 472-1201
CERTIFICATE OF AUTHORITY
NO. 001270

REV.

NOTES:
1. ANY WORK INDICATED ON THE PLANS THAT EXTENDS BEYOND THE PROJECT LIMITS IS CONSIDERED INCIDENTAL TO AND A PART OF THE CONSTRUCTION OF THIS PROJECT.

2. ALL BEARING BASED ON STATE PLANE COORDINATES MISSOURI WESTERN ZONE.

3. SEE SIGNING AND PAVEMENT MARKING SHEETS FOR ADDITIONAL DETAILS.

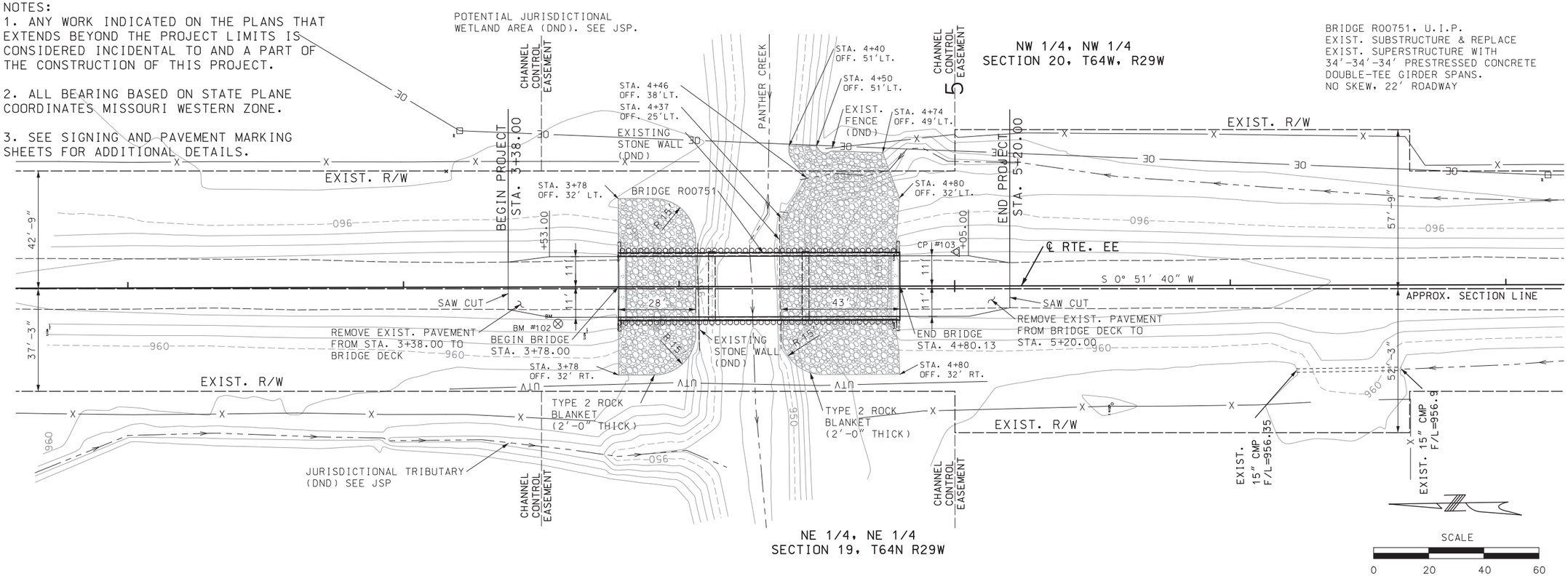

BM #102

SET 1/2" REBAR WITH YELLOW PLASTIC CAP STAMPED "CONTROL POINT" ON THE NORTH SIDE OF THE BRIDGE OVER PANTHER CREEK AND THE WEST SIDE OF ROUTE "EE", APPROX. 14' WEST OF THE CENTERLINE OF THE HIGHWAY, AND APPROX. 22' NORTH OF THE NORTHERN END OF THE BRIDGE.

ELEVATION = 965.26'

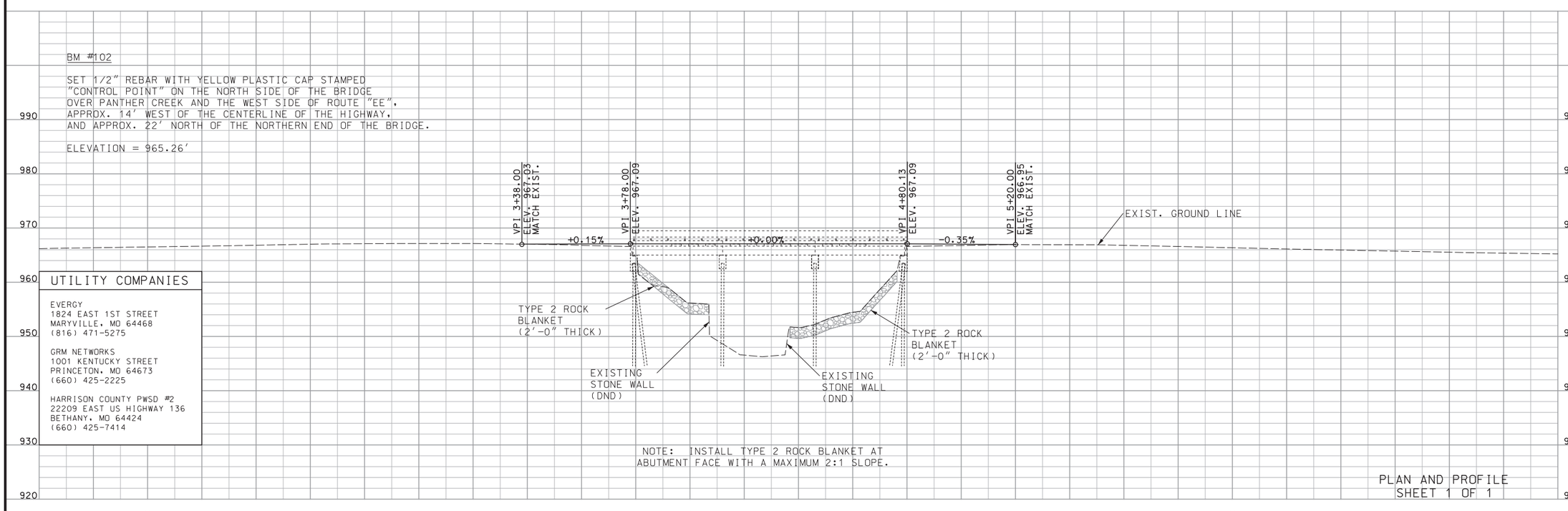

NOTE: INSTALL TYPE 2 ROCK BLANKET AT ABUTMENT FACE WITH A MAXIMUM 2:1 SLOPE.

PLAN AND PROFILE
SHEET 1 OF 1

UTILITY COMPANIES

EVERGY
1824 EAST 1ST STREET
MARYVILLE, MO 64468
(816) 471-5275

GRM NETWORKS
1001 KENTUCKY STREET
PRINCETON, MO 64673
(660) 425-2225

HARRISON COUNTY PWSD #2
22209 EAST US HIGHWAY 136
BETHANY, MO 64424
(660) 425-7414

STATE OF MISSOURI
LISA BELLE MOSLEY
NUMBER PE-2004005376
PROFESSIONAL ENGINEER

THIS SHEET HAS BEEN SIGNED, SEALED AND DATED ELECTRONICALLY.

DATE PREPARED	
07/17/2020	
ROUTE EE	STATE MO
DISTRICT NW	SHEET NO. 4
COUNTY HARRISON	
JOB NO. J1S3253	
CONTRACT ID.	
PROJECT NO.	
BRIDGE NO.	

DATE	DESCRIPTION

IF A SEAL IS PRESENT ON THIS SHEET IT HAS BEEN ELECTRONICALLY SEALED AND DATED.

MISSOURI HIGHWAYS AND TRANSPORTATION COMMISSION
105 WEST CAPITOL
JEFFERSON CITY, MO 65102
1-888-ASK-MODOT (1-888-275-6636)

HNTB
715 KIRK DRIVE
KANSAS CITY, MO 64105-1310
TELEPHONE (816) 472-1201
CERTIFICATE OF AUTHORITY NO. 001270

REV.

004_PP_J1S3253_I20.dgn 1:56:13 PM 7/15/2020

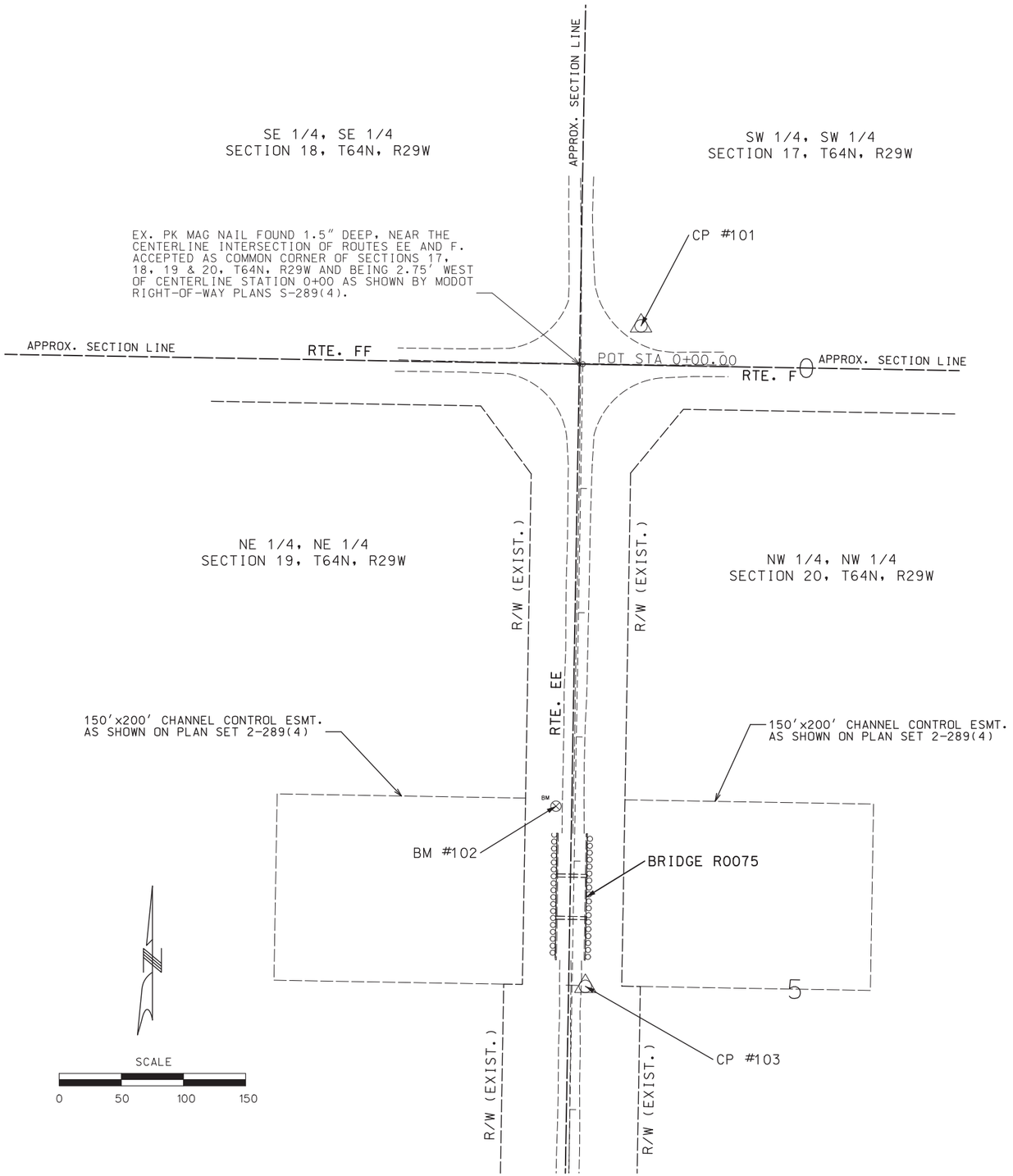

HORIZONTAL & VERTICAL CONTROL REFERENCE MONUMENT INFORMATION

BRIDGE R0075 HWY. EE OVER PANTHER CREEK (HARRISON COUNTY)
PROJECT COORDINATES SHOWN HEREON ARE BASED ON GRID NORTH OF THE MISSOURI STATE PLANE COORDINATE SYSTEM, WESTERN ZONE, NAD-83, NAVD-88 PER THE 12A GEOID AND MODIFIED TO STATE PLANE (GROUND). ALL COORDINATES SHOWN ARE IN U.S. SURVEY FEET.

PROJECT COORDINATES WERE ESTABLISHED FROM GPS OBSERVATION BY UTILIZING A LOCAL GPS BASE STATION AND DOING A SINGLE POINT LOCALIZATION TO MoDNR GRS MONUMENT DESIGNATED "GE-08"(PID O75008), AND MODIFIED TO STATE PLANE GROUND COORDINATES USING THE PUBLISHED COMBINED GRID FACTOR OF 0.9999056 (SCALE FACTOR=1.000094409) BY SCALING ABOUT A BASE POINT OF 0,0,0. (REFER TO MISSOURI GEOGRAPHIC REFERENCE SYSTEM SHEET FOR ADDITIONAL INFORMATION AND LOCATION.)

(GE-08) MoDNR PUBLISHED GRID COORDINATES (m), CONVERTED TO U.S. SURVEY FOOT.
NORTHING (GRID) = 460983.357(m) = 1512409.564'
EASTING (GRID) = 870740.447(m) = 2856754.283'
ELEVATION = 292.2(m) = 958.66'

PROJECT COORDINATES FOR (GE-08) MODIFIED TO GROUND ABOUT BASE POINT 0,0,0 USING SAID GRID FACTOR OF 0.9999056 (SCALE FACTOR=1.000094409).
NORTHING (PROJECT GROUND) = 1512552.35'
EASTING (PROJECT GROUND) = 2857023.99'
ELEVATION = 958.66'

(STATION IS LOCATED APPROXIMATELY 3 MILES SOUTHWEST OF PROJECT SITE.)

PROJECT SITE CONTROL

SITE BENCHMARK & CONTROL PT. #102 (HORIZONTAL & VERTICAL)
NORTHING = 1519689.69 / EASTING = 2873666.53 / ELEVATION = 965.26

(SET) 1/2" REBAR WITH YELLOW PLASTIC CAP STAMPED "CONTROL POINT" ON THE NORTH SIDE OF THE BRIDGE OVER PANTHER CREEK AND THE WEST SIDE OF ROUTE "EE", APPROX. 14' WEST OF THE CENTERLINE OF THE HIGHWAY, AND APPROX. 22'NORTH OF THE NORTHERN END OF THE BRIDGE.

RM-1 S48°E, 33.5' TO THE N.E. COR. OF THE EASTERN CONCRETE CURB ON BRIDGE DECK.
RM-2 S03°E, 22' TO THE N.W. COR. OF THE WESTERN CONCRETE CURB ON BRIDGE DECK.
RM-3 S14°W, 10.8' TO A ROUTE "EE" SIGN.

CONTROL PT. #103 (HORIZONTAL ONLY)
NORTHING = 1519544.67 / EASTING = 2873690.16

(SET) 1/2" REBAR WITH YELLOW PLASTIC CAP STAMPED "CONTROL POINT" ON THE SOUTH SIDE OF THE BRIDGE OVER PANTHER CREEK AND THE EAST SIDE OF ROUTE "EE", APPROX. 11.5' EAST OF THE CENTERLINE OF THE HIGHWAY, AND APPROX. 21' SOUTH OF THE SOUTHERN END OF THE BRIDGE.

RM-1 N48°W, 32.1' TO THE S.W. COR. OF THE WESTERN CONCRETE CURB ON BRIDGE DECK.
RM-2 N, 20.9' TO THE S.E. COR. OF THE EASTERN CONCRETE CURB ON BRIDGE DECK.
RM-3 N11°E, 21.1' TO THE SOUTHEASTERN MOST CORNER OF A CONCRETE WINGWALL ON SOUTH AND EAST END OF BRIDGE.

CONTROL PT. #101 (HORIZONTAL ONLY)
NORTHING = 1520076.14 / EASTING = 2873734.99

(SET) 1/2" REBAR WITH YELLOW PLASTIC CAP STAMPED "CONTROL POINT" IN THE NORTHEASTERN QUADRANT OF THE INTERSECTION OF ROUTE'S "EE", & "FF", APPROX. 48 FEET EAST OF THE CENTERLINE OF ROUTE "EE", AND APPROXIMATELY 31 FEET NORTH OF THE CENTERLINE OF ROUTE "F"

RM-1 S59°E, 30.4' TO THE NORTHERN END OF A 15" CMP CULVERT PIPE.
RM-2 S58°W, 57.3' TO THE CENTERLINE, CENTERLINE INTERSECTION OF ROUTES "EE" & "F".
RM-3 N34°W, 53' TO AN "EE"/ "F" HIGHWAY SIGN.

REFERENCE POINTS
SHEET 1 OF 1

STATE OF MISSOURI
LISA BELLE MOSLEY
NUMBER PE-2004005376
PROFESSIONAL ENGINEER

THIS SHEET HAS BEEN SIGNED, SEALED AND DATED ELECTRONICALLY.

DATE PREPARED	
07/17/2020	
ROUTE: EE	STATE: MO
DISTRICT: NW	SHEET NO.: 5
COUNTY: HARRISON	
JOB NO.: J1S3253	
CONTRACT ID.	
PROJECT NO.	
BRIDGE NO.	

DATE	DESCRIPTION

MISSOURI HIGHWAYS AND TRANSPORTATION COMMISSION
105 WEST CAPITOL
JEFFERSON CITY, MO 65102
1-888-ASK-MODOT (1-888-275-6636)

HNTB
715 KIRK DRIVE
KANSAS CITY, MO 64105-1310
TELEPHONE (816) 472-1201
CERTIFICATE OF AUTHORITY
NO. 001270

IF A SEAL IS PRESENT ON THIS SHEET IT HAS BEEN ELECTRONICALLY SEALED AND DATED.

REV.

COORDINATE POINT LISTING - MISSOURI COORDINATE SYSTEM OF 1983

SHEET NO	STATION	LOCATION	✳ OFFSET (FEET)	MODIFIED STATE PLANE (GROUND) NORTHING (FEET)	EASTING (FEET)	ELEVATION	STATE PLANE ZONE	DESCRIPTION	GPK POINT ID	VERTICAL	GEOID MODEL
TIES (HORIZONTAL AND VERTICAL)											
5	3 MILES S.W. OF PROJECT SITE			1512552.35	2857023.99	958.66	WEST, NAD-83	MoDNR GRS MONUMENT	GE-08	NAVD-88	12A GEOID
5	3+56.03	RTE. EE	13.4 RT.	1519689.69	2873666.53	965.26	WEST, NAD-83	HORIZONTAL AND VERTICAL CONTROL	BM #102	NAVD-88	12A GEOID
5	5+00.67	RTE. EE	12.4 LT.	1519544.67	2873690.16	--	WEST, NAD-83	HORIZONTAL CONTROL	CP #103	NAVD-88	12A GEOID
5	N.E. CORNER OF RTE. EE & RTE. F			1520076.14	2873734.99	--	WEST, NAD-83	HORIZONTAL CONTROL	CP #101	NAVD-88	12A GEOID
ALIGNMENT (ROUTE EE)											
4	0+00.00	RTE. EE	0.0	1520045.47	2873685.24	--	WEST, NAD-83	POINT OF BEGINNING	POB	NAVD-88	12A GEOID
4	13+20.00	RTE. EE	0.0	1518725.62	2873665.40	--	WEST, NAD-83	POINT OF ENDING	POE	NAVD-88	12A GEOID

✳ GROUND DISTANCE

NOTE: GRID FACTOR = 0.9999056 (SCALE FACTOR = 1.000094409)

COORDINATE POINTS
SHEET 1 OF 1

STATE OF MISSOURI
LISA BELLE MOSLEY
NUMBER PE-2004005376
PROFESSIONAL ENGINEER

THIS SHEET HAS BEEN SIGNED, SEALED AND DATED ELECTRONICALLY.

DATE PREPARED 07/17/2020

ROUTE	STATE
EE	MO
DISTRICT	SHEET NO.
NW	6

COUNTY HARRISON

JOB NO. J1S3253

CONTRACT ID.

PROJECT NO.

BRIDGE NO.

DATE	DESCRIPTION

IF A SEAL IS PRESENT ON THIS SHEET IT HAS BEEN ELECTRONICALLY SEALED AND DATED.

MISSOURI HIGHWAYS AND TRANSPORTATION COMMISSION
105 WEST CAPITOL
JEFFERSON CITY, MO 65102
1-888-ASK-MODOT (1-888-275-6636)

HNTB
715 KIRK DRIVE
KANSAS CITY, MO 64105-1310
TELEPHONE (816) 472-1201
CERTIFICATE OF AUTHORITY
NO. 001270

REV.

006_CP_J1S3253_I1.dgn 12:32:39 PM 7/13/2020

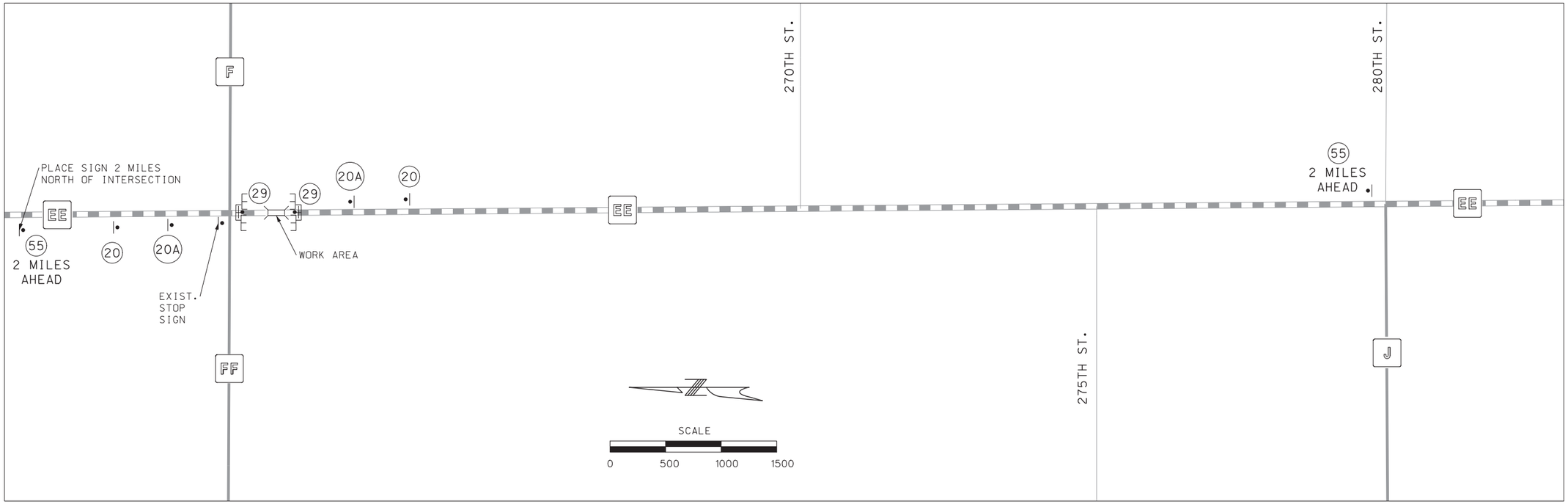

W020-3

20

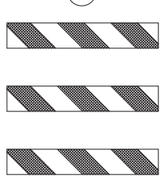

INSTALL ADVANCED WARNING RAIL SYSTEM (AWRS) WITH ROAD CLOSED AHEAD SIGN.

W020-3a

20A

R11-2

29

R11-3a

55

SEE PLAN VIEW ON THIS SHEET FOR MILES AHEAD.

NOTE:
REFER TO MODOT EPG 616.8.8 (TA-8) FOR "HIGHWAY CLOSURE" FOR SIGN SPACING AND ADDITIONAL DETAILS.

TRAFFIC CONTROL LEGEND

• SIGN (SINGLE SIDED)

E BARRICADE

TEMPORARY TRAFFIC CONTROL
SHEET 1 OF 1

STATE OF MISSOURI
LISA BELLE MOSLEY
NUMBER PE-2004005376
PROFESSIONAL ENGINEER

THIS SHEET HAS BEEN SIGNED, SEALED AND DATED ELECTRONICALLY.

DATE PREPARED	
07/17/2020	
ROUTE	STATE
EE	MO
DISTRICT	SHEET NO.
NW	7
COUNTY	
HARRISON	
JOB NO.	
J1S3253	
CONTRACT ID.	
PROJECT NO.	
BRIDGE NO.	

DATE	DESCRIPTION

REV.

IF A SEAL IS PRESENT ON THIS SHEET IT HAS BEEN ELECTRONICALLY SEALED AND DATED.

MISSOURI HIGHWAYS AND TRANSPORTATION COMMISSION
105 WEST CAPITOL
JEFFERSON CITY, MO 65102
1-888-ASK-MODOT (1-888-275-6636)

HNTB
715 KIRK DRIVE
KANSAS CITY, MO 64105-1310
TELEPHONE (816) 472-1201
CERTIFICATE OF AUTHORITY
NO. 001270

007_TC_J1S3253_I500.dgn 10:12:30 AM 7/13/2020

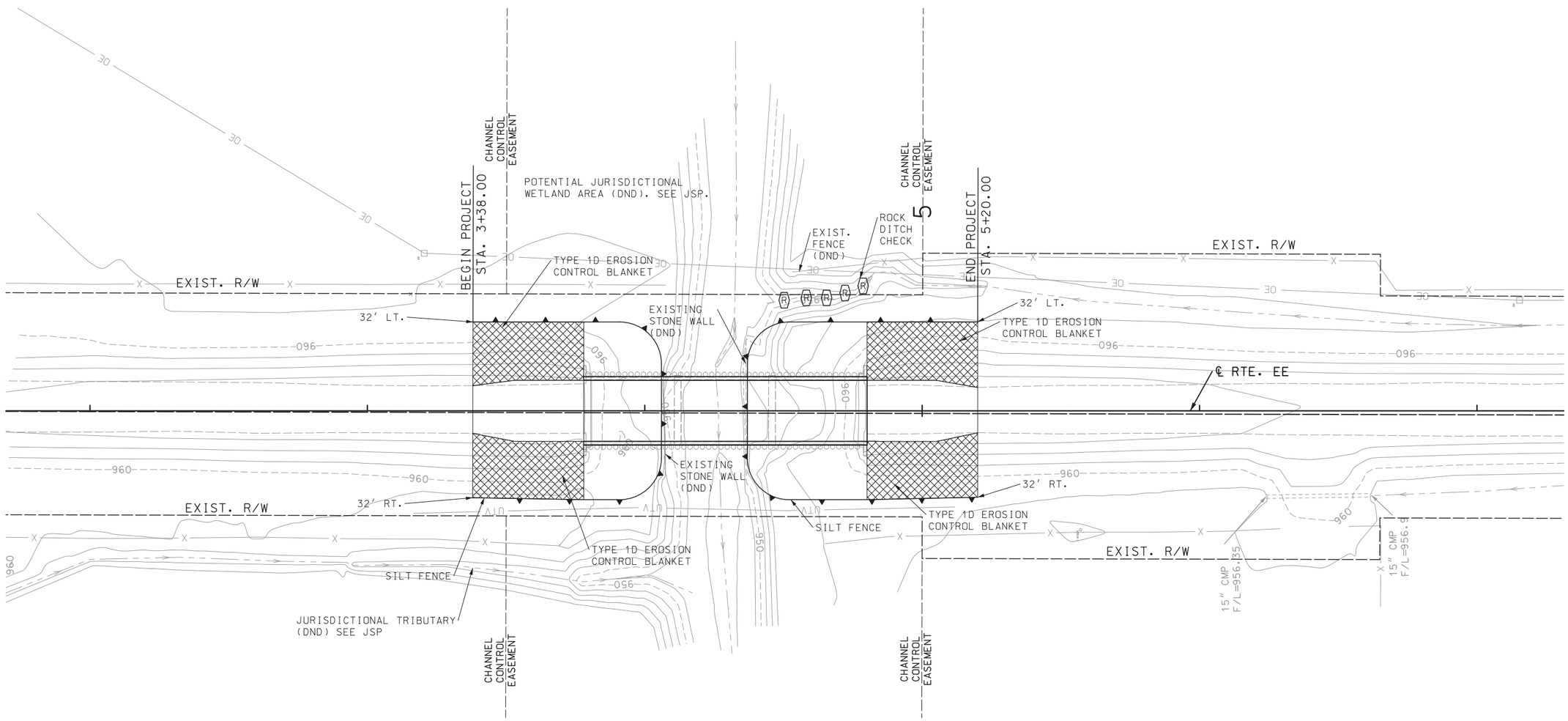

TEMPORARY EROSION CONTROL LEGEND

SILT FENCE

ROCK DITCH CHECK

TYPE 1D EROSION CONTROL BLANKET

NOTE: INSTALL ROCK DITCH CHECKS AFTER PLACING PERMANENT TYPE 2 ROCK BLANKET. ROCK DITCH CHECKS TO REMAIN IN PLACE AS PERMANENT SLOPE PROTECTION.

EROSION CONTROL
SHEET 1 OF 1

STATE OF MISSOURI
LISA BELLE MOSLEY
NUMBER PE-2004005376
PROFESSIONAL ENGINEER

THIS SHEET HAS BEEN SIGNED, SEALED AND DATED ELECTRONICALLY.

DATE PREPARED	
07/17/2020	
ROUTE: EE	STATE: MO
DISTRICT: NW	SHEET NO.: 8
COUNTY: HARRISON	
JOB NO.: J1S3253	
CONTRACT ID.	
PROJECT NO.	
BRIDGE NO.	

DATE	DESCRIPTION

IF A SEAL IS PRESENT ON THIS SHEET IT HAS BEEN ELECTRONICALLY SEALED AND DATED.

MISSOURI HIGHWAYS AND TRANSPORTATION COMMISSION
105 WEST CAPITOL
JEFFERSON CITY, MO 65102
1-888-ASK-MODOT (1-888-275-6636)

HNTB
715 KIRK DRIVE
KANSAS CITY, MO 64105-1310
TELEPHONE (816) 472-1201
CERTIFICATE OF AUTHORITY
NO. 001270

REV.

008_EC_J1S3253_I20.dgn 4:24:06 PM 7/14/2020

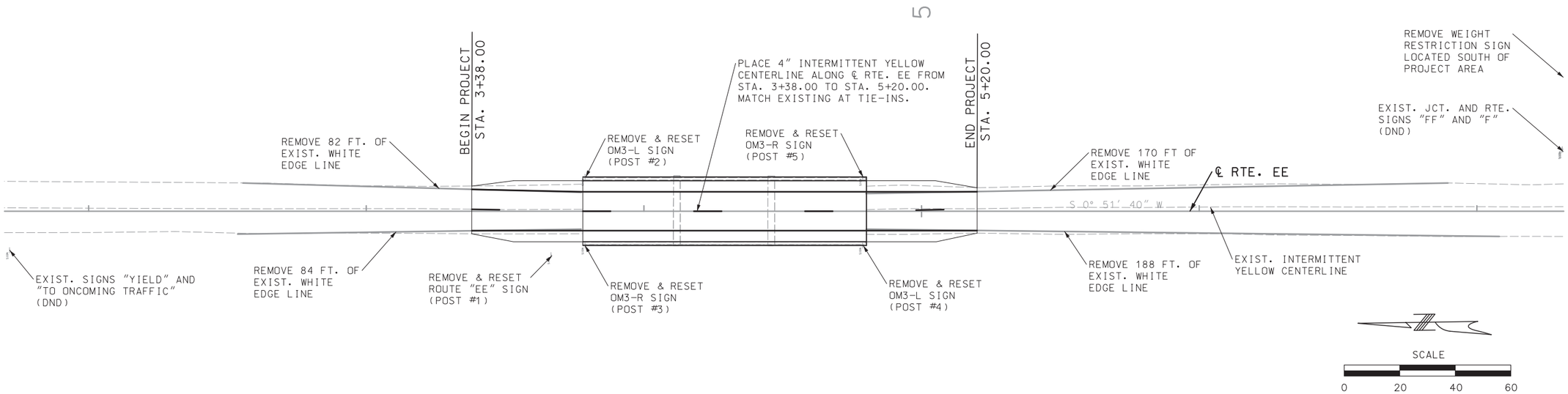

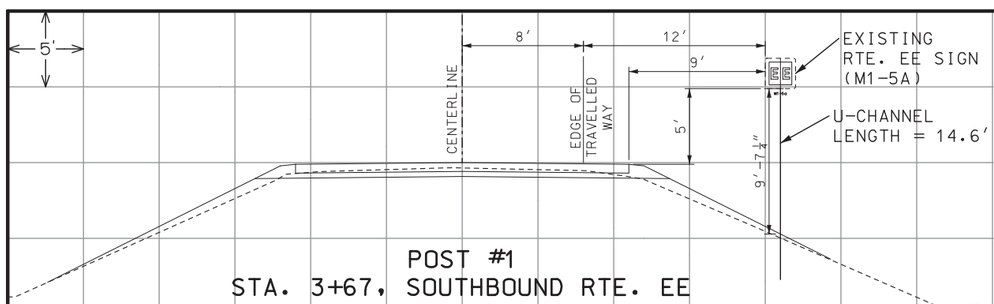

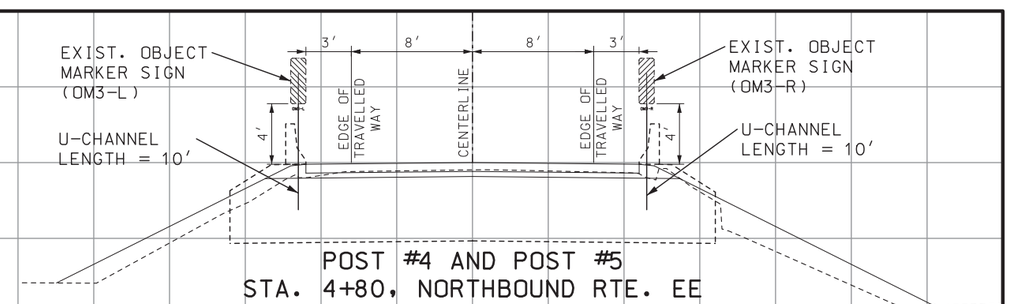

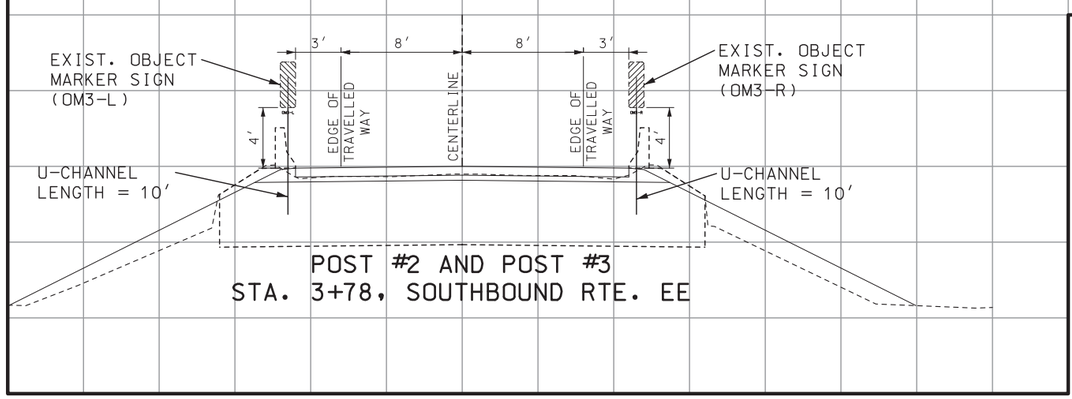

POST NUMBER	STATION	LOCATION	STANDARD SIGN ASSEMBLIES — ASSEMBY TYPE: U CHANNEL POST — SIGN DESCRIPTION, SIZES & NO. OF EACH											U CHANNEL POST
			M1 5a	OM3										ITEM NO. 9031250
														LF
1	3+67	RTE. EE, RT.	1											14.6
2	3+78	RTE. EE, LT.		1										10.0
3	3+78	RTE. EE, RT.		1										10.0
4	4+80	RTE. EE, RT.		1										10.0
5	4+80	RTE. EE, LT.		1										10.0
													TOTAL	55

SIGNING AND PAVEMENT MARKING
SHEET 1 OF 1

STATE OF MISSOURI
LISA BELLE MOSLEY
NUMBER PE-2004005376
PROFESSIONAL ENGINEER

THIS SHEET HAS BEEN SIGNED, SEALED AND DATED ELECTRONICALLY.

DATE PREPARED	
07/17/2020	
ROUTE EE	STATE MO
DISTRICT NW	SHEET NO. 9
COUNTY HARRISON	
JOB NO. J1S3253	
CONTRACT ID.	
PROJECT NO.	
BRIDGE NO.	

DATE	DESCRIPTION

IF A SEAL IS PRESENT ON THIS SHEET IT HAS BEEN ELECTRONICALLY SEALED AND DATED.

MISSOURI HIGHWAYS AND TRANSPORTATION COMMISSION
105 WEST CAPITOL
JEFFERSON CITY, MO 65102
1-888-ASK-MODOT (1-888-275-6636)

HNTB
715 KIRK DRIVE
KANSAS CITY, MO 64105-1310
TELEPHONE (816) 472-1201
CERTIFICATE OF AUTHORITY
NO. 001270

REV.

009_SN_J1S3253_I20.dgn 12:41:37 PM 7/13/2020

SEC/SUR 19 & 20 TWP 64N RGE 29W

U.I.P. EXISTING SUBSTRUCTURE AND REPLACE EXISTING SUPERSTRUCTURE WITH (34.0′– 34.0′– 34.0′) PRESTRESSED CONCRETE DOUBLE-TEE GIRDER SPANS

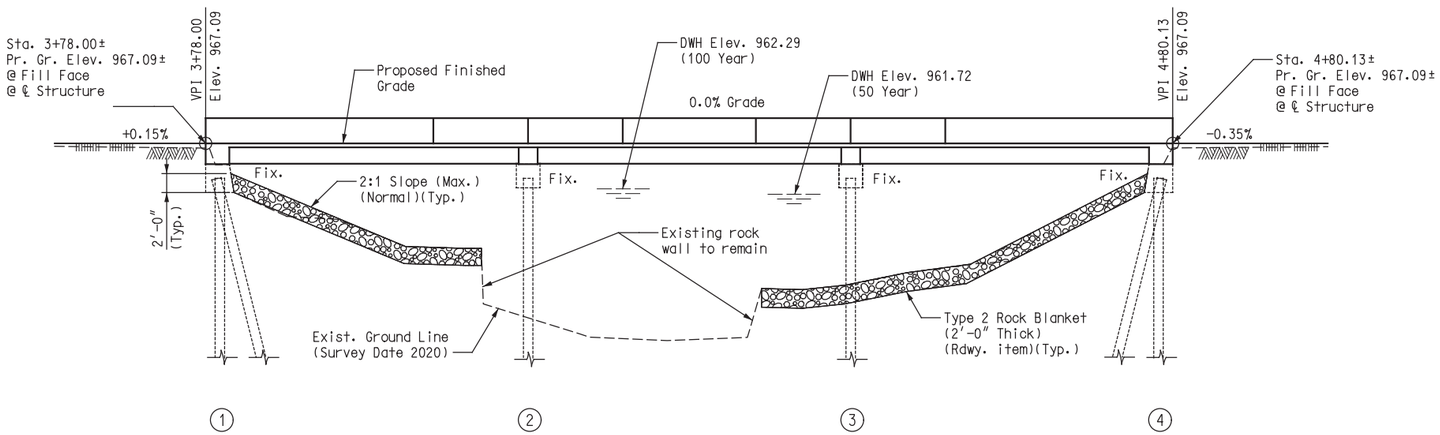

GENERAL ELEVATION

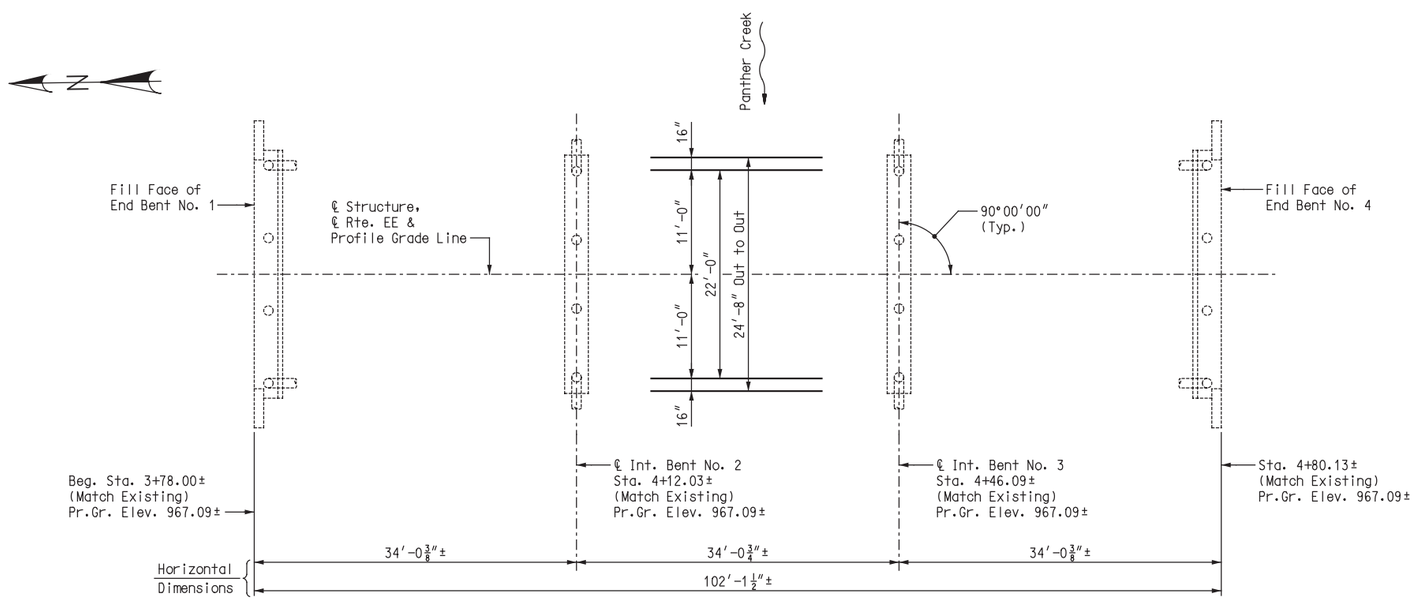

PLAN

BENCHMARK

B.M. 102
(Set) ½″ rebar with yellow plastic cap stamped "Control Point" on the north side of the bridge over Panther Creek and the west side of Rte. EE, approx. 14′ west of the centerline of the highway, and approx. 22′ north of the northern end of the bridge.
Elev. 965.26
Northing 1519689.69, Easting 2873666.53

Note:

For General Notes, Estimated Quantities and Estimated Quantities for Slab on Concrete Adjacent Beam, see Sheet No. 2.

REPAIRS TO BRIDGE OVER PANTHER CREEK

ROUTE EE FROM ROUTE 136 TO ROUTE M

ABOUT 5.4 MILES NORTH OF ROUTE 136

STA. 3+78.00± (MATCH EXIST.)

STATE OF MISSOURI
JEFFREY B. SMITH
NUMBER E-27175
REGISTERED PROFESSIONAL ENGINEER

THIS SHEET HAS BEEN SIGNED, SEALED, AND DATED ELECTRONICALLY.

DATE	
07/17/2020	
ROUTE EE	STATE MO
DISTRICT BR	SHEET NO. 1
COUNTY HARRISON	
JOB NO. J1S3253	
CONTRACT ID.	
PROJECT NO.	
BRIDGE NO. R00751	

DESCRIPTION | DATE

IF A SEAL IS PRESENT ON THIS SHEET IT HAS BEEN ELECTRONICALLY SEALED AND DATED.

MISSOURI HIGHWAYS AND TRANSPORTATION COMMISSION
105 WEST CAPITOL
JEFFERSON CITY, MO 65102
1-888-ASK-MODOT (1-888-275-6636)

HNTB
715 KIRK DRIVE
KANSAS CITY, MO 64105-1310
TELEPHONE (816) 472-1201
CERTIFICATE OF AUTHORITY
NO. 001270

REV.

Detailed MAY 2020
Checked MAY 2020

Note: This drawing is not to scale. Follow dimensions.

STD. 706.35

\\kcow00\jobs4\76739\PlanProduction\Bridges\2-R0075-PantherCreek\Drawings\B_R00751_001_J1S3253.dgn 08-JUL-2020 13:02

GENERAL NOTES:

Design Specifications:
2002 AASHTO LFD (17th Ed.) Standard Specifications

Design Loading:
H15-44 (AASHO 1959)(Existing)
HS20-44 (New Construction)
No Future Wearing Surface
Superstructure: Simply-Supported, Non-Composite for dead load.
Continuous Composite for live load.

Design Unit Stresses:
Class B-2 Concrete (Superstructure, except Prestressed Girders, and Type B Barrier) f'c = 4,000 psi

Class B-1 Concrete (Type B Barrier and Substructure Repair (Formed)) f'c = 4,000 psi

Reinforcing Steel (Grade 60) fy = 60,000 psi

Neoprene Pads:
Plain Neoprene Bearing Pads shall be 60 durometer and shall be in accordance with Sec 716.

Joint Filler:
All joint filler shall be in accordance with Sec 1057 for preformed sponge rubber expansion and partition joint filler, except as noted.

Reinforcing Steel:
Minimum clearance to reinforcing steel shall be 1-1/2", unless otherwise shown.

Bars bonded in existing concrete not removed shall be cleanly stripped and embedded into new concrete where possible. If length is available, existing bars shall extend into new concrete at least 40 diameters for plain bars and 30 diameters for deformed bars, unless otherwise noted.

Resin Anchors:
The contractor shall use one of the qualified resin anchor systems in accordance with Sec 1039.

Cost of furnishing and installing the resin anchor system, complete-in-place, will be considered completely covered by the contract unit price for Slab on Concrete Adjacent Beam.

The minimum embedment depth in concrete with f'c = 4,000 psi for the resin anchor system shall be that required to meet the minimum ultimate pull out strength in accordance with Sec 1039 but shall not be less than 5".

An epoxy coated #6 Grade 60 reinforcing bar shall be substituted for the 3/4"Ø threaded rod. For bar lengths and shapes, see Sheets No. 13 and 14.

Traffic Handling:
Structure to be closed during construction.

Structural Steel Protective Coatings:
All exposed surfaces of the existing steel shells for cast-in-place concrete piles shall be recoated with one 6-mil thickness of aluminum epoxy-mastic primer applied over an SSPC-SP3 surface preparation in accordance with Sec 1081. The bituminous coating shall be applied one foot above and below the existing ground line and in accordance with Sec 702. These protective coatings will not be required below the normal low water line. The cost of surface preparation will be considered completely covered by the contract lump sum price for Surface Preparation for Applying Epoxy-Mastic Primer. The cost of the aluminum epoxy-mastic primer and bituminous coating will be considered completely covered by the contract lump sum price for Aluminum Epoxy-Mastic Primer.

Miscellaneous:
Contractor shall verify all dimensions in field before ordering new material.

Outline of existing work is indicated by light dashed lines. Heavy lines indicate new work.

Roadway surfacing adjacent to bridge ends to match top of new bridge slab (Roadway Item).

Cost of any required excavation for bridge will be considered completely covered by the contract unit price for other items.

All concrete repairs shall be in accordance with Sec 704, unless otherwise noted.

Abbreviations:
E.F. denotes Each Face
N.F. denotes Near Face
U.N.O. denotes Unless Noted Otherwise
T.B.R. denotes To Be Removed
T.R. denotes To Remain

ESTIMATED QUANTITIES

	Item		Total
	Partial Removal of Substructure Concrete	lump sum	1
	Removal of Existing Superstructure	lump sum	1
*	Type B Barrier	linear foot	205
	Slab on Concrete Adjacent Beam	sq. yard	280
	Substructure Repair (Formed)	sq. foot	80
	16 in., Prestressed Concrete Double-Tee Girder	linear foot	396
	Slab Drain	each	14
	Surface Preparation for Applying Epoxy-Mastic Primer	lump sum	1
	Aluminum Epoxy-Mastic Primer	lump sum	1
	Plain Neoprene Bearing Pad	each	48

* Type B Barrier shall be cast-in-place. Slip forming is not permitted.

All concrete and reinforcing steel in the end bents and intermediate bent concrete diaphragms is included in the Estimated Quantities for Slab on Concrete Adjacent Beam.

Removal and disposal of rails, precast concrete girders, curbs and any other items necessary to reconstruct the bridge superstructure as shown on the plans or as directed by the engineer will be considered completely covered by the contract lump sum price for Removal of Existing Superstructure.

ESTIMATED QUANTITIES FOR SLAB ON CONCRETE ADJACENT BEAM

Item		Total
Class B-2 Concrete	cu. yard	64.9
Reinforcing Steel (Epoxy Coated)	pound	13,320

The table of Estimated Quantities for Slab on Concrete Adjacent Beam represents the quantities used by the State in preparing the cost estimate for concrete slabs. The area of the concrete slab will be measured to the nearest square yard with the horizontal dimensions as shown on the plan of slab. Payment for conventional forms, all concrete, and epoxy coated reinforcing steel including resin anchors will be considered completely covered by the contract unit price for the slab. Variations may be encountered in the estimated quantities but the variations cannot be used for an adjustment in the contract unit price.

Method of forming the slab shall be as shown on the plans and in accordance with Sec 703. All hardware for forming the slab to be left in place as a permanent part of the structure shall be coated in accordance with ASTM A123 or ASTM B633 with a thickness class SC 4 and a finish type I, II, or III.

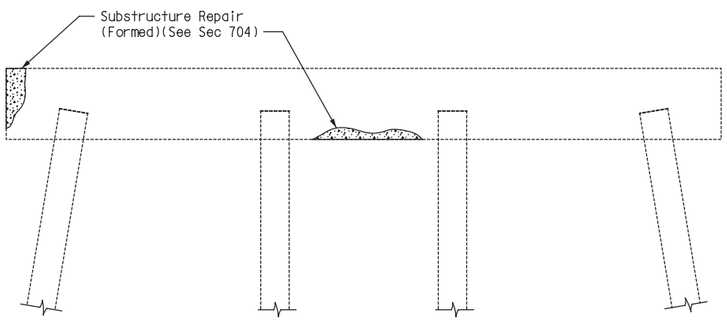

ELEVATION OF INT. BENTS NO. 2 & 3
SHOWING SUBSTRUCTURE REPAIR

Note: Substructure Repair (Formed)-Specific locations to be identified by the Engineer per Sec. 704.

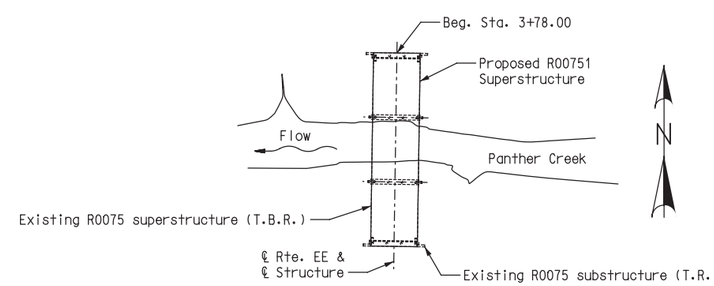

LOCATION SKETCH

STATE OF MISSOURI
JEFFREY B. SMITH
NUMBER E-27175
REGISTERED PROFESSIONAL ENGINEER

THIS SHEET HAS BEEN SIGNED, SEALED, AND DATED ELECTRONICALLY.

DATE 07/17/2020
ROUTE EE | STATE MO
DISTRICT BR | SHEET NO. 2
COUNTY HARRISON
JOB NO. J1S3253
CONTRACT ID.
PROJECT NO.
BRIDGE NO. R00751

DESCRIPTION | DATE

IF A SEAL IS PRESENT ON THIS SHEET IT HAS BEEN ELECTRONICALLY SEALED AND DATED.

MISSOURI HIGHWAYS AND TRANSPORTATION COMMISSION
105 WEST CAPITOL
JEFFERSON CITY, MO 65102
1-888-ASK-MODOT (1-888-275-6636)

HNTB
715 KIRK DRIVE
KANSAS CITY, MO 64105-1310
TELEPHONE (816) 472-1201
CERTIFICATE OF AUTHORITY
NO. 001270

REV.

GENERAL NOTES, ESTIMATED QUANTITIES & SUBSTRUCTURE REHAB DETAILS

Detailed MAY 2020
Checked MAY 2020

Note: This drawing is not to scale. Follow dimensions.

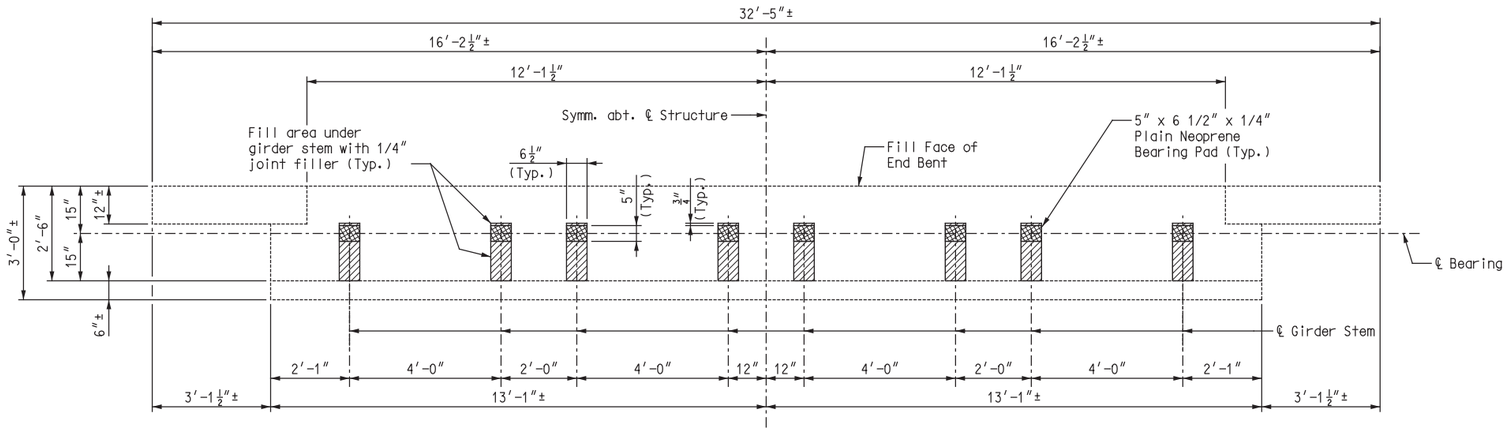

PLAN SHOWING DIMENSIONS

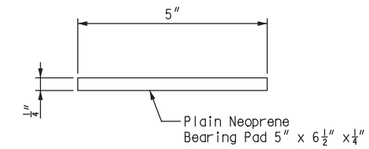

TYPICAL SECTION THRU
PLAIN NEOPRENE BEARING PAD
8 Required at each End Bent

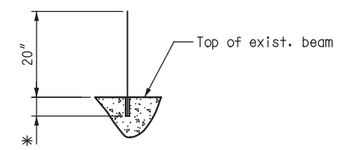

SYSTEM "A"
(44 Req'd at each End bent)

DETAIL OF RESIN ANCHOR SYSTEM
✱ Manufacturer's recommended embedment depth (5″ Min.)

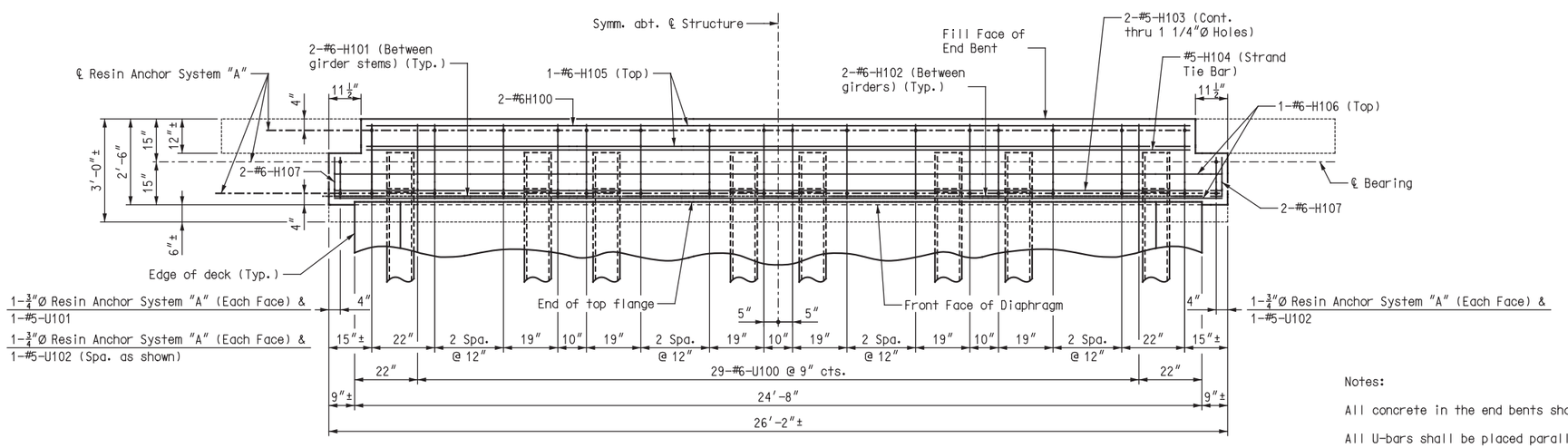

PLAN SHOWING REINFORCEMENT

Notes:

All concrete in the end bents shall be Class B-2.

All U-bars shall be placed parallel to ℄ Structure.

For location of #5-H104 (Strand Tie Bar), see Sheet No. 6.

For location of 1¼″Ø holes in girder stems, see Sheet No. 6.

Bar marks are shown for End Bent No. 1 using "100" series bar marks.
End Bent No. 4 is similar, except use "400" series bar marks.

Work this sheet with Sheet No 4.

DETAILS OF END BENTS NO. 1 & 4

STATE OF MISSOURI
JEFFREY B. SMITH
NUMBER E-27175
REGISTERED PROFESSIONAL ENGINEER

THIS SHEET HAS BEEN SIGNED, SEALED, AND DATED ELECTRONICALLY.

IF A SEAL IS PRESENT ON THIS SHEET IT HAS BEEN ELECTRONICALLY SEALED AND DATED.

DATE	
07/17/2020	
ROUTE: EE	STATE: MO
DISTRICT: BR	SHEET NO.: 3
COUNTY: HARRISON	
JOB NO.: J1S3253	
CONTRACT ID.	
PROJECT NO.	
BRIDGE NO.: R00751	

DESCRIPTION	DATE

MISSOURI HIGHWAYS AND TRANSPORTATION COMMISSION
105 WEST CAPITOL
JEFFERSON CITY, MO 65102
1-888-ASK-MODOT (1-888-275-6636)

HNTB
715 KIRK DRIVE
KANSAS CITY, MO 64105-1310
TELEPHONE (816) 472-1201
CERTIFICATE OF AUTHORITY
NO. 001270

REV.

Detailed MAY 2020
Checked MAY 2020

Note: This drawing is not to scale. Follow dimensions.

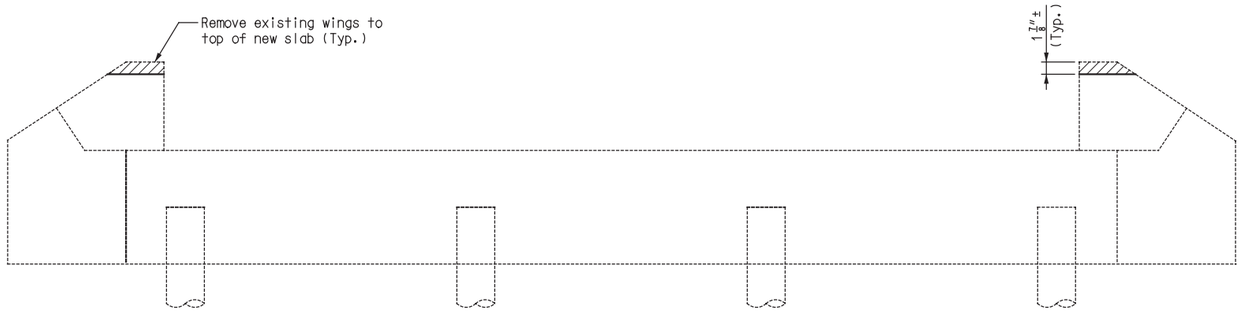

ELEVATION SHOWING CONCRETE REMOVAL

Notes:

The areas exposed by the removal of concrete and not covered with new concrete shall be coated with an approved qualified special mortar in accordance with Sec 704.

The cost of wing removal as shown will be considered completely covered by the contract lump sum price for Partial Removal of Substructure Concrete.

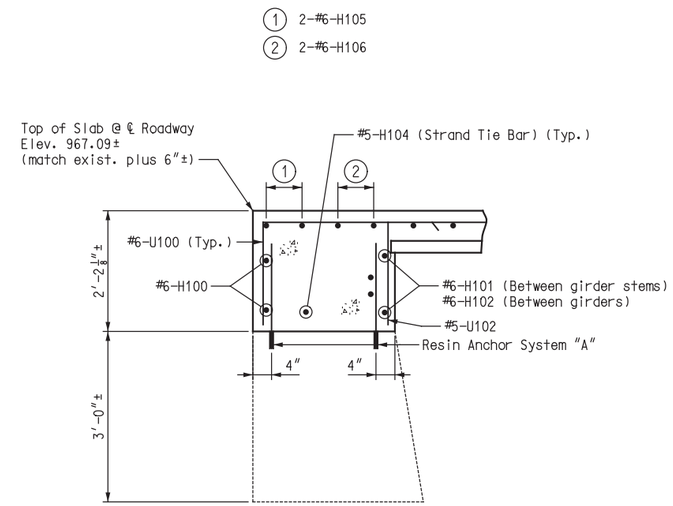

SECTION A-A

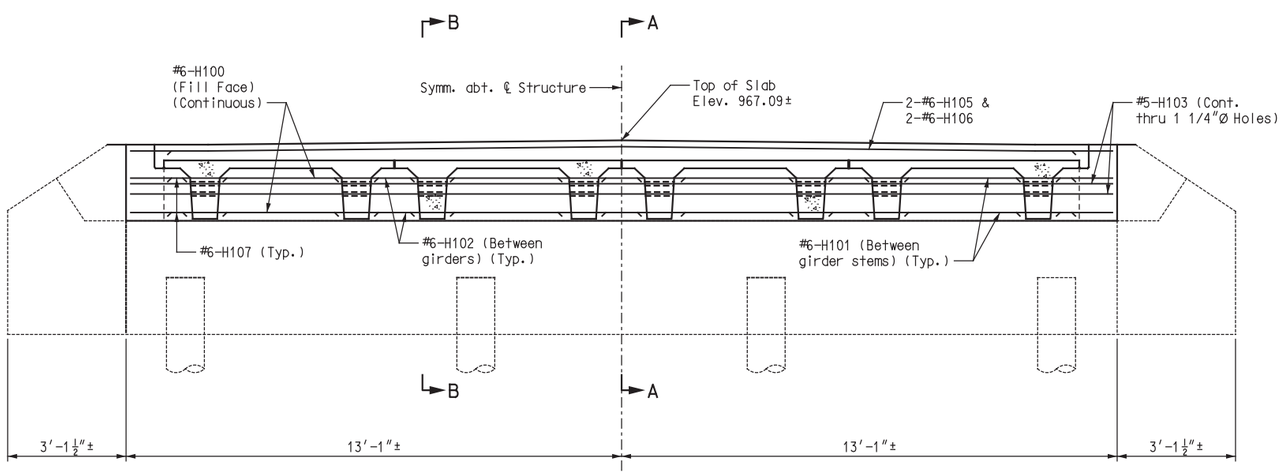

SECTION NEAR END BENT

(Resin anchor system and type B barrier not shown for clarity)

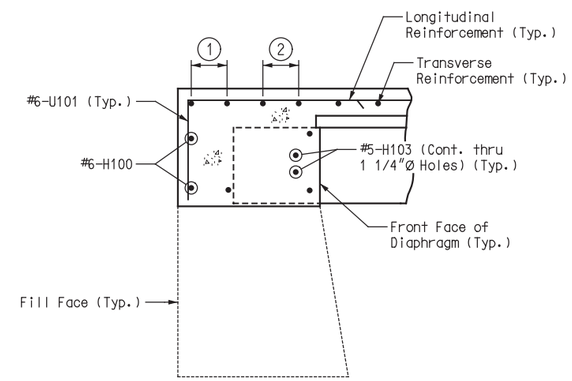

SECTION B-B

Notes:

For details and reinforcement of Type B Barrier, see Sheet No. 11.

Work this sheet with Sheet No. 3.

DETAILS OF END BENTS NO. 1 & 4

Detailed MAY 2020
Checked MAY 2020

Note: This drawing is not to scale. Follow dimensions.

STATE OF MISSOURI
JEFFREY B. SMITH
NUMBER E-27175
REGISTERED PROFESSIONAL ENGINEER

THIS SHEET HAS BEEN SIGNED, SEALED, AND DATED ELECTRONICALLY.

DATE	07/17/2020
ROUTE	EE
STATE	MO
DISTRICT	BR
SHEET NO.	4
COUNTY	HARRISON
JOB NO.	J1S3253
CONTRACT ID.	
PROJECT NO.	
BRIDGE NO.	R00751

DATE	DESCRIPTION

IF A SEAL IS PRESENT ON THIS SHEET IT HAS BEEN ELECTRONICALLY SEALED AND DATED.

MISSOURI HIGHWAYS AND TRANSPORTATION COMMISSION
105 WEST CAPITOL
JEFFERSON CITY, MO 65102
1-888-ASK-MODOT (1-888-275-6636)

HNTB
715 KIRK DRIVE
KANSAS CITY, MO 64105-1310
TELEPHONE (816) 472-1201
CERTIFICATE OF AUTHORITY
NO. 001270

REV.

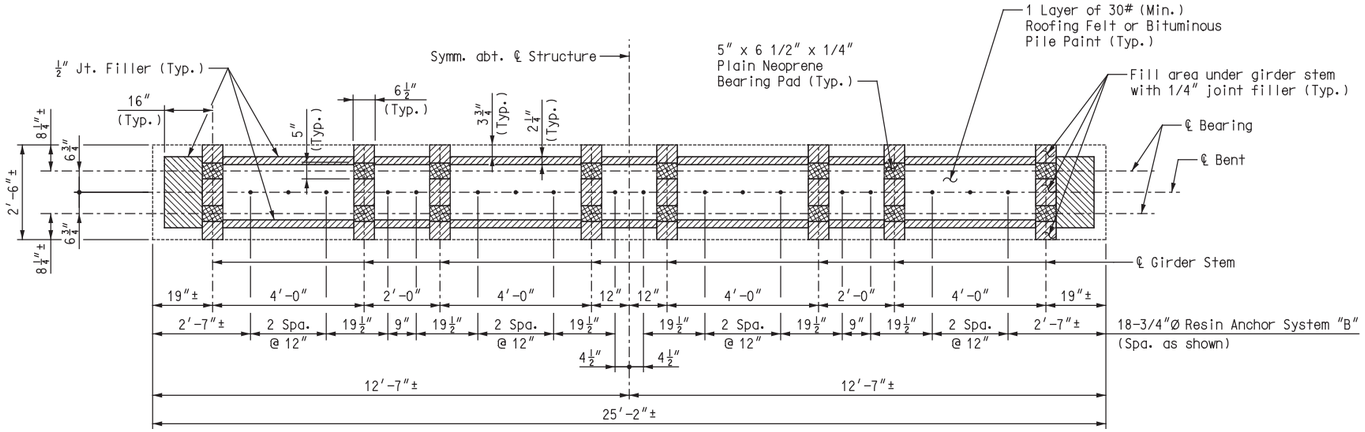

PLAN OF BEAM

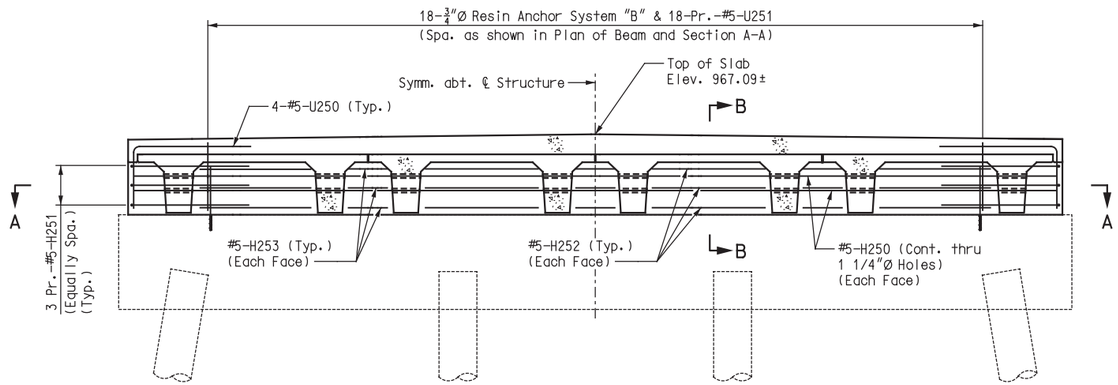

SECTION NEAR INTERMEDIATE BENT

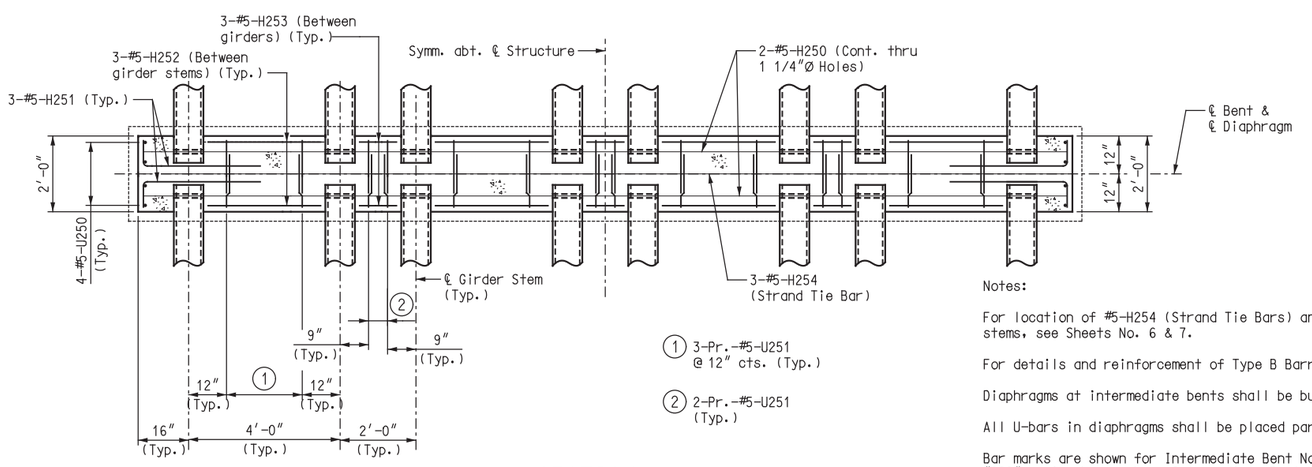

SECTION A-A

Notes:

For location of #5-H254 (Strand Tie Bars) and 1 1/4"Ø holes in girder stems, see Sheets No. 6 & 7.

For details and reinforcement of Type B Barrier, see Sheet No. 11.

Diaphragms at intermediate bents shall be built vertical.

All U-bars in diaphragms shall be placed parallel to ℄ Structure.

Bar marks are shown for Intermediate Bent No. 2 diaphragm using "200" series bar marks. Intermediate Bent No. 3 diaphragm is similar, except use "300" series bar marks.

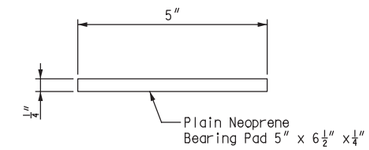

TYPICAL SECTION THRU PLAIN NEOPRENE BEARING PAD

16 Required at each Int. Bent

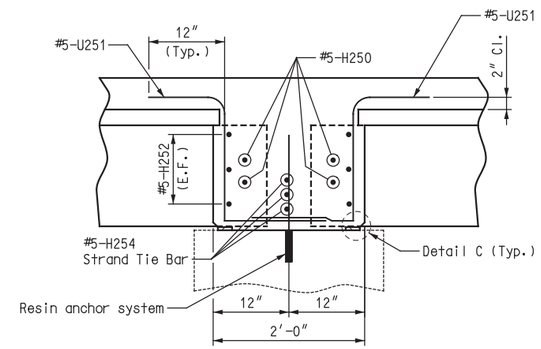

SECTION B-B

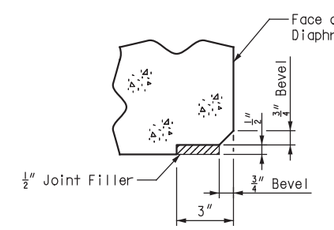

DETAIL C

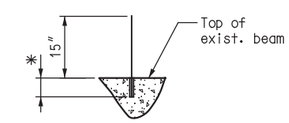

SYSTEM "B"
(18 Req'd at each Int. Bent)

DETAIL OF RESIN ANCHOR SYSTEM

* Manufacturer's recommended embedment depth (5" Min.)

Notes:

The cost of shear block removal as shown will be considered completely covered by the contract lump sum price for Partial Removal of Substructure Concrete.

The areas exposed by the removal of concrete and not covered with new concrete shall be coated with an approved qualified special mortar in accordance with Sec 704.

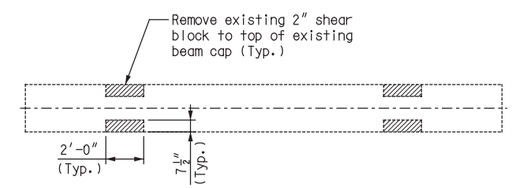

PLAN SHOWING CONCRETE REMOVAL LIMITS

DETAILS OF CONCRETE DIAPHRAGMS AT INTERMEDIATE BENTS NO. 2 & 3

Detailed APR 2020
Checked MAY 2020

Note: This drawing is not to scale. Follow dimensions.

STATE OF MISSOURI
JEFFREY B. SMITH
NUMBER E-27175
REGISTERED PROFESSIONAL ENGINEER

THIS SHEET HAS BEEN SIGNED, SEALED, AND DATED ELECTRONICALLY.

DATE	
07/17/2020	
ROUTE: EE	STATE: MO
DISTRICT: BR	SHEET NO.: 5
COUNTY: HARRISON	
JOB NO.: J1S3253	
CONTRACT ID.	
PROJECT NO.	
BRIDGE NO.: R00751	

DESCRIPTION

DATE

IF A SEAL IS PRESENT ON THIS SHEET IT HAS BEEN ELECTRONICALLY SEALED AND DATED.

MISSOURI HIGHWAYS AND TRANSPORTATION COMMISSION
105 WEST CAPITOL
JEFFERSON CITY, MO 65102
1-888-ASK-MODOT (1-888-275-6636)

HNTB
715 KIRK DRIVE
KANSAS CITY, MO 64105-1310
TELEPHONE (816) 472-1201
CERTIFICATE OF AUTHORITY NO. 001270

REV.

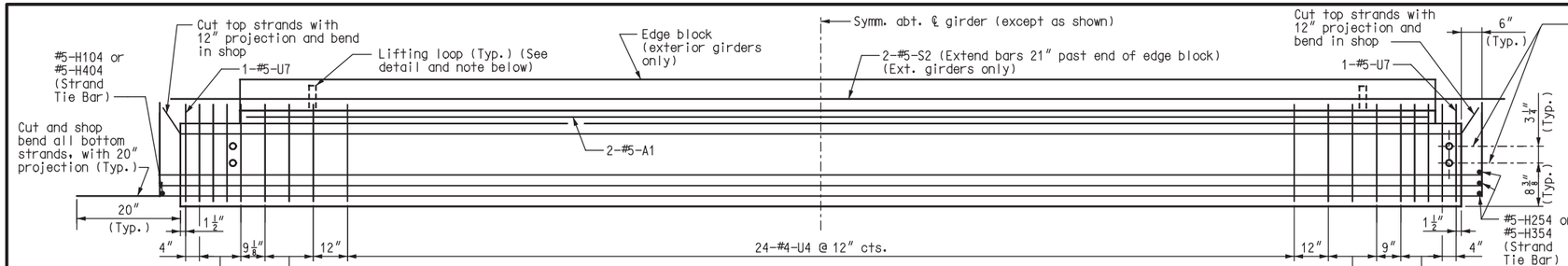

PART ELEVATION OF GIRDER STEM
(Ext. girder shown, Int. girder similar except as shown)

✱ Int. girders only
✱✱ Ext. girders only

	BILL OF REINFORCING STEEL - EACH GIRDER				
	NO.	SIZE & MARK	ACTUAL LENGTH	SHAPE	BENDING DIAGRAMS
	4	5 A1	30'-5"	20	
✱✱	46	6 S1	3'-7"	20	
✱✱	2	5 S2	34'-2"	20	
	76	4 U4	5'-3"	15	
✱	2	4 U5	10'-6"	11	
✱✱	2	4 U6	10'-10"	11	
	4	5 U7	5'-3"	15	

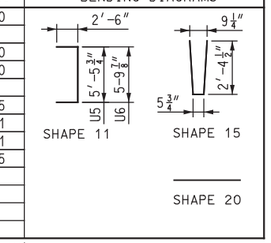

All dimensions are out to out.
Hooks and bends shall be in accordance with the CRSI Manual of Standard Practice for Detailing Reinforced Concrete Structures, Stirrup and Tie Dimensions.
Actual lengths are measured along centerline of bar to the nearest inch.
Minimum clearance to reinforcing shall be 1" except for 4x4-W4 x W4.
All S and U reinforcing bars shall be epoxy coated.
All reinforcement shall be grade 60.

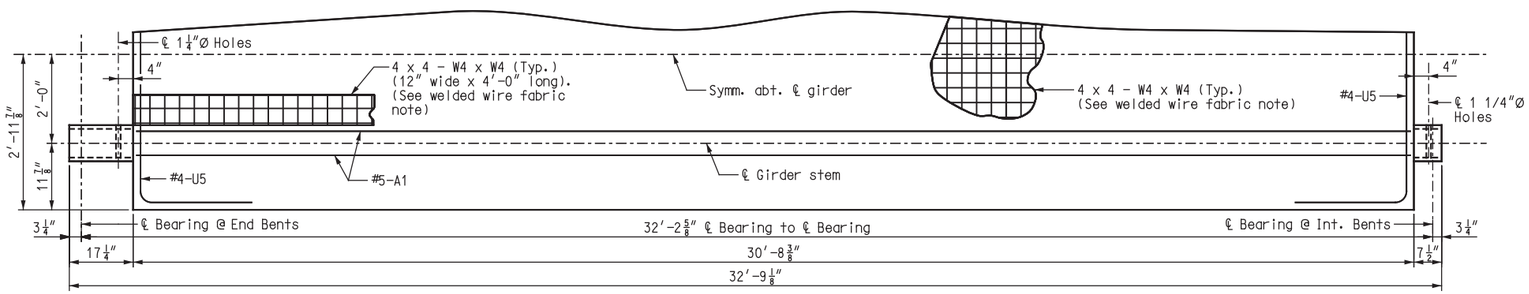

PART PLAN OF INTERIOR GIRDER

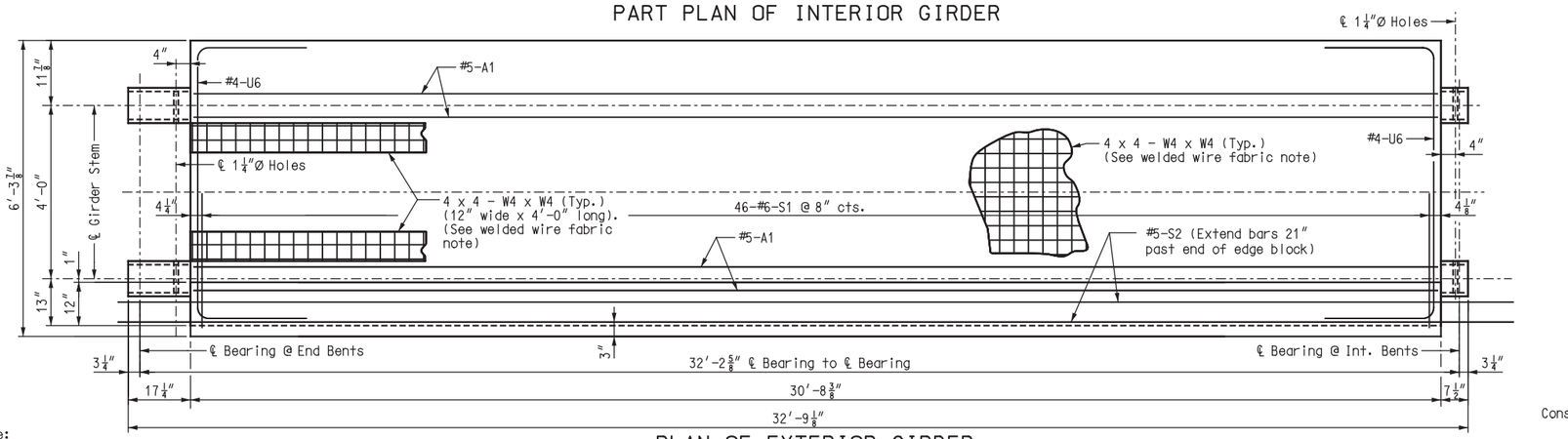

PLAN OF EXTERIOR GIRDER

Note:
For theoretical slab thickness @ crown of slab, see Sheet No. 9.

Note: For details of Type B Barrier reinforcement, see Sheets No. 11 & 12.

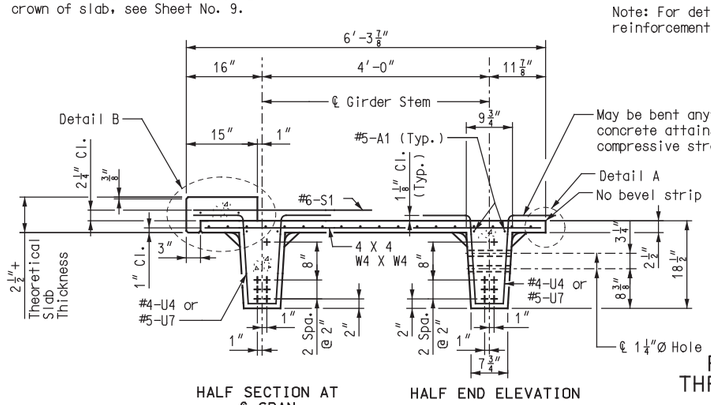

HALF SECTION AT ℄ SPAN
HALF END ELEVATION
EXTERIOR GIRDER

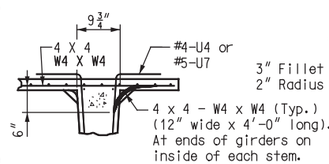

PART SECTION THRU GIRDER STEM

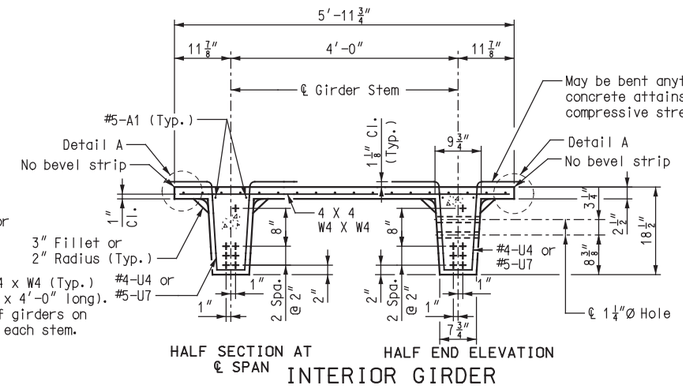

HALF SECTION AT ℄ SPAN
HALF END ELEVATION
INTERIOR GIRDER

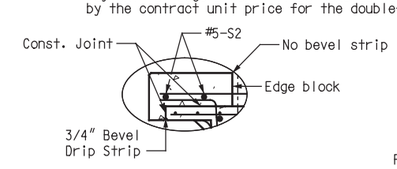

DETAIL B

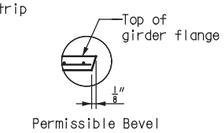

DETAIL A

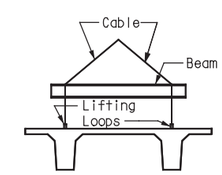

SUGGESTED LIFTING DETAIL

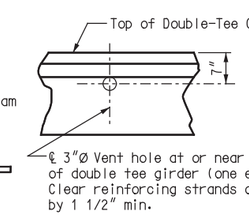

PART SECTION OF DOUBLE-TEE

GENERAL NOTES:

Concrete for prestressed girders shall be Class A-1 with f'c = 7000 psi and f'ci = 5000 psi.

(+) Indicates prestressing strand.

Use 14 strands with an initial prestress force of 434 kips.

Prestressing tendons shall be uncoated, seven-wire, low-relaxation strands, 1/2" diameter in accordance with AASHTO M203, Grade 270. Pretensioned members shall be in accordance with Sec 1029.

Girders shall be handled and erected into position in a manner that will not impair the strength of the girder.

The vertical face of the exterior girder that will be in contact with the slab shall be roughened by sandblasting, or other approved methods, to provide suitable bond between girder and slab.

All exposed edges of concrete shall have a 1/2" radius or a 3/8" bevel, unless otherwise noted.

Lifting loops: provide lifting loops in each end of double-tee girder, located near center of stem, 2 feet from each end.

Welded wire fabric: adequate reinforcing other than the specified welded wire fabric may be used with the approval of the engineer.

For location of drain blockouts, see Sheet No. 8.

Payment for edge block will be considered completely covered by the contract unit price for the double-tee girders.

PRESTRESSED CONCRETE DOUBLE-TEE GIRDER DETAILS SPANS (1-2) & (3-4)

Detailed APR 2020
Checked APR 2020

Note: This drawing is not to scale. Follow dimensions.

STATE OF MISSOURI
JEFFREY B. SMITH
NUMBER E-27175
REGISTERED PROFESSIONAL ENGINEER

THIS SHEET HAS BEEN SIGNED, SEALED, AND DATED ELECTRONICALLY.

DATE 07/17/2020
ROUTE EE | STATE MO
DISTRICT BR | SHEET NO. 6
COUNTY HARRISON
JOB NO. J1S3253
CONTRACT ID.
PROJECT NO.
BRIDGE NO. R00751

DATE	DESCRIPTION

IF A SEAL IS PRESENT ON THIS SHEET IT HAS BEEN ELECTRONICALLY SEALED AND DATED.

MISSOURI HIGHWAYS AND TRANSPORTATION COMMISSION
105 WEST CAPITOL
JEFFERSON CITY, MO 65102
1-888-ASK-MODOT (1-888-275-6636)

HNTB
715 KIRK DRIVE
KANSAS CITY, MO 64105-1310
TELEPHONE (816) 472-1201
CERTIFICATE OF AUTHORITY NO. 001270

REV.

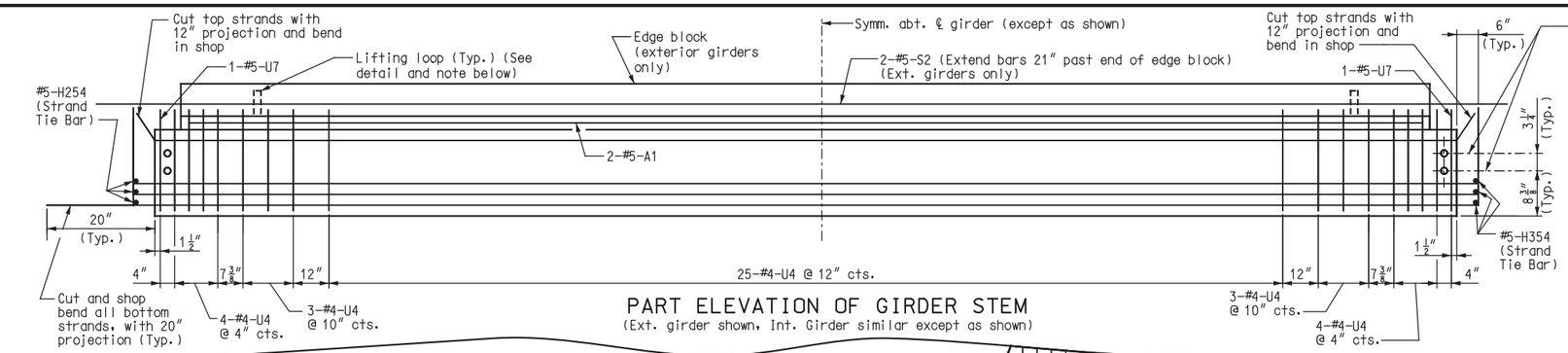

PART ELEVATION OF GIRDER STEM
(Ext. girder shown, Int. Girder similar except as shown)

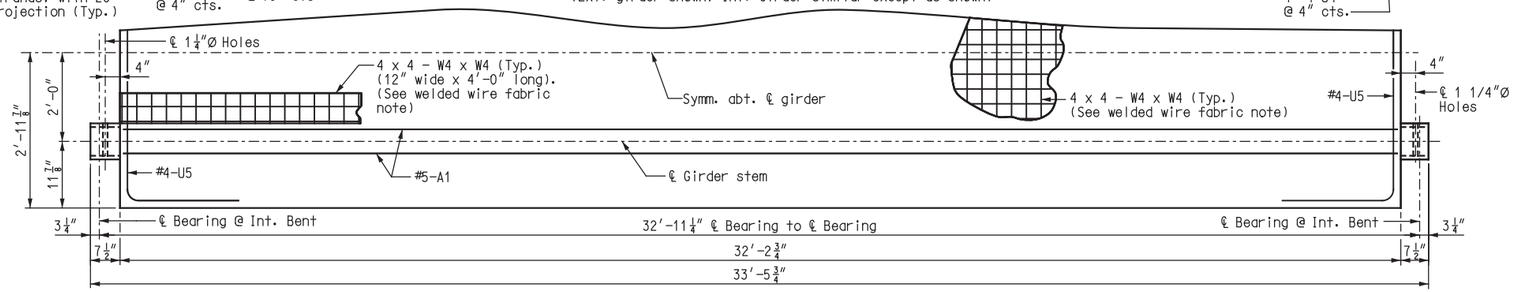

PART PLAN OF INTERIOR GIRDER

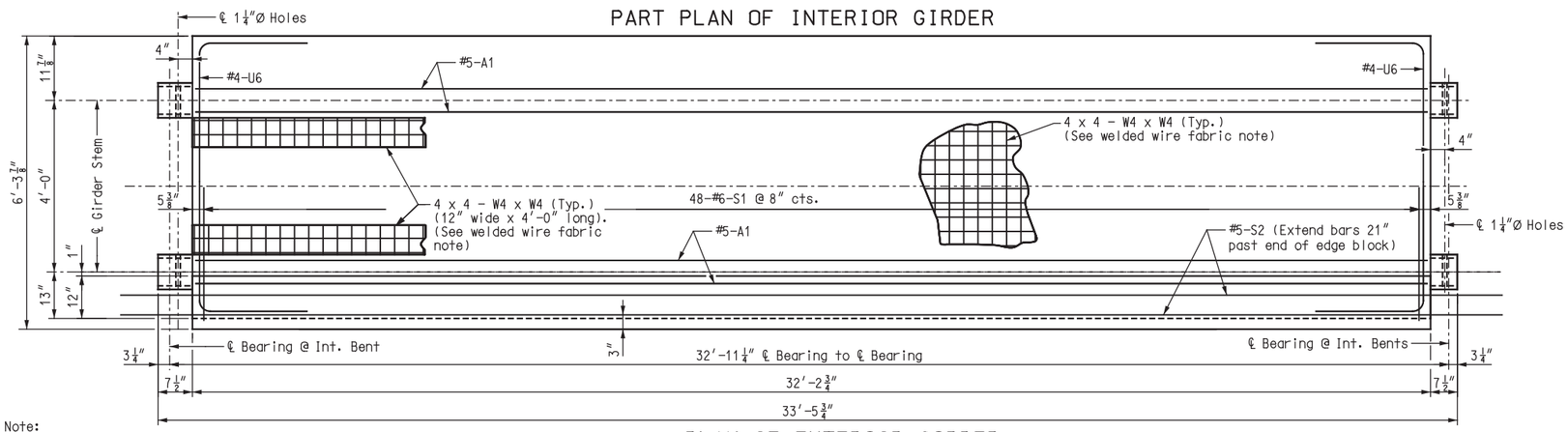

PLAN OF EXTERIOR GIRDER

Note:
For theoretical slab thickness @ crown of slab, see Sheet No. 9.

Note: For details of Type B Barrier reinforcement, see Sheets No. 11 & 12.

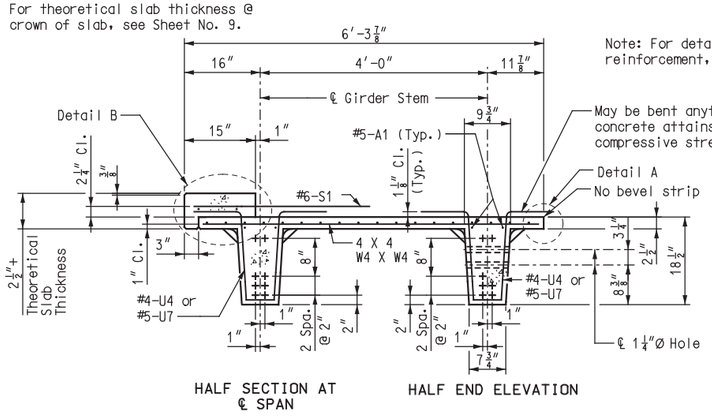

HALF SECTION AT ℄ SPAN
HALF END ELEVATION
EXTERIOR GIRDER

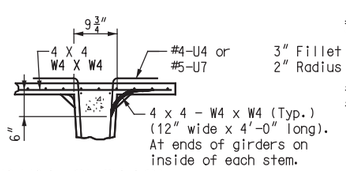

PART SECTION THRU GIRDER STEM

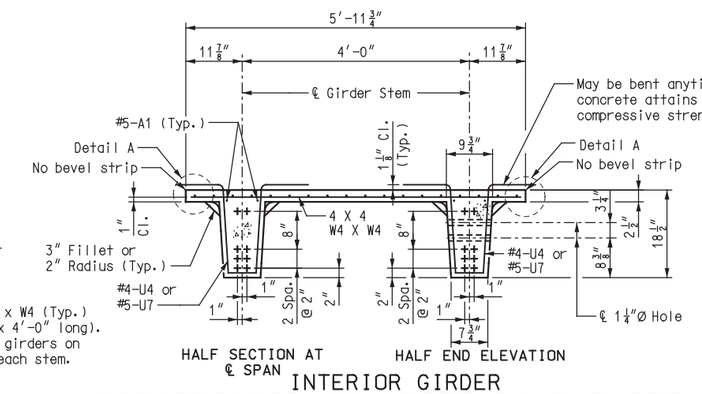

HALF SECTION AT ℄ SPAN
HALF END ELEVATION
INTERIOR GIRDER

PRESTRESSED CONCRETE DOUBLE-TEE GIRDER DETAILS (SPAN 2-3)

✱ Int. girders only
✱✱ Ext. girders only

BILL OF REINFORCING STEEL - EACH GIRDER

	NO.	SIZE & MARK	ACTUAL LENGTH	SHAPE
	4	5 A1	31′-11″	20
✱✱	46	6 S1	3′-7″	20
✱✱	2	5 S2	35′-9″	20
	76	4 U4	5′-3″	15
✱	2	4 U5	10′-6″	11
✱✱	2	4 U6	10′-10″	11
	4	5 U7	5′-3″	15

BENDING DIAGRAMS

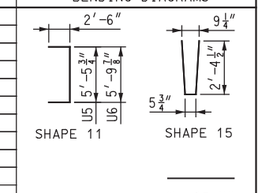

All dimensions are out to out.
Hooks and bends shall be in accordance with the CRSI Manual of Standard Practice for Detailing Reinforced Concrete Structures, Stirrup and Tie Dimensions.
Actual lengths are measured along centerline of bar to the nearest inch.
Minimum clearance to reinforcing shall be 1″ except for 4x4-W4 x W4.
All S and U reinforcing bars shall be epoxy coated.
All reinforcement shall be grade 60.

GENERAL NOTES:

Concrete for prestressed girders shall be Class A-1 with f′c = 7000 psi and f′ci = 5000 psi.

(+) Indicates prestressing strand.

Use 16 strands with an initial prestress force of 496 kips.

Prestressing tendons shall be uncoated, seven-wire, low-relaxation strands, 1/2″ diameter in accordance with AASHTO M203, Grade 270. Pretensioned members shall be in accordance with Sec 1029.

Girders shall be handled and erected into position in a manner that will not impair the strength of the girder.

The vertical face of the exterior girder that will be in contact with the slab shall be roughened by sandblasting, or other approved methods, to provide suitable bond between girder and slab.

All exposed edges of concrete shall have a 1/2″ radius or a 3/8″ bevel, unless otherwise noted.

Lifting loops: provide lifting loops in each end of double-tee girder, located near center of stem, 2 feet from each end.

Welded wire fabric: adequate reinforcing other than the specified welded wire fabric may be used with the approval of the engineer.

For location of drain blockouts, see Sheet No. 8.

Payment for edge block will be considered completely covered by the contract unit price for the double-tee girders.

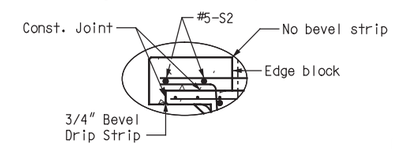

DETAIL B

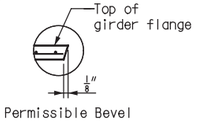

DETAIL A

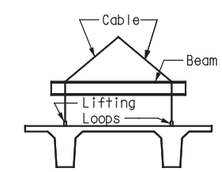

SUGGESTED LIFTING DETAIL

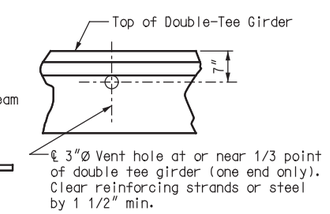

PART SECTION OF DOUBLE-TEE

Detailed APR 2020
Checked APR 2020

Note: This drawing is not to scale. Follow dimensions.

STATE OF MISSOURI
JEFFREY B. SMITH
NUMBER E-27175
REGISTERED PROFESSIONAL ENGINEER

THIS SHEET HAS BEEN SIGNED, SEALED, AND DATED ELECTRONICALLY.

DATE	
07/17/2020	
ROUTE: EE	STATE: MO
DISTRICT: BR	SHEET NO.: 7
COUNTY: HARRISON	
JOB NO.: J1S3253	
CONTRACT ID.	
PROJECT NO.	
BRIDGE NO.: R00751	

DATE	DESCRIPTION

IF A SEAL IS PRESENT ON THIS SHEET IT HAS BEEN ELECTRONICALLY SEALED AND DATED.

MISSOURI HIGHWAYS AND TRANSPORTATION COMMISSION
105 WEST CAPITOL
JEFFERSON CITY, MO 65102
1-888-ASK-MODOT (1-888-275-6636)

HNTB
715 KIRK DRIVE
KANSAS CITY, MO 64105-1310
TELEPHONE (816) 472-1201
CERTIFICATE OF AUTHORITY NO. 001270

REV.

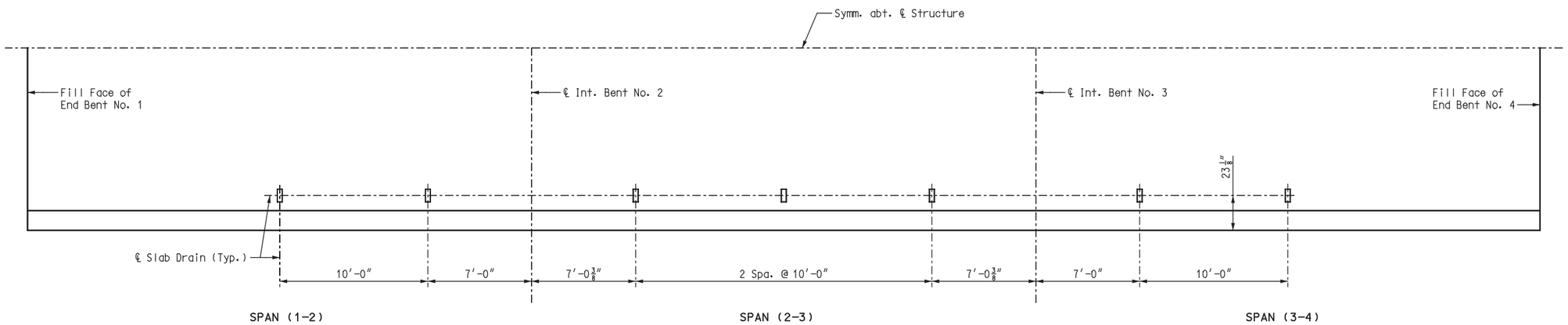

HALF PLAN OF SLAB SHOWING SLAB DRAIN SPACING

Note: Longitudinal dimensions shown are horizontal.

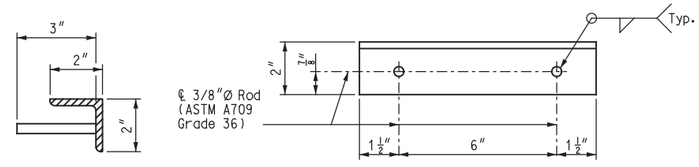

SECTION

ELEVATION

DETAIL OF ANGLE

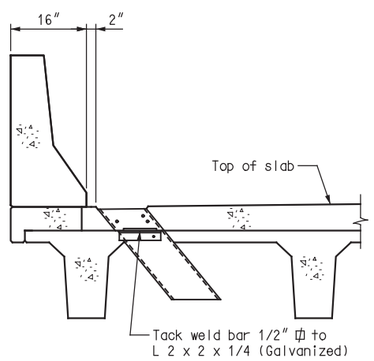

PART SECTION NEAR DRAIN

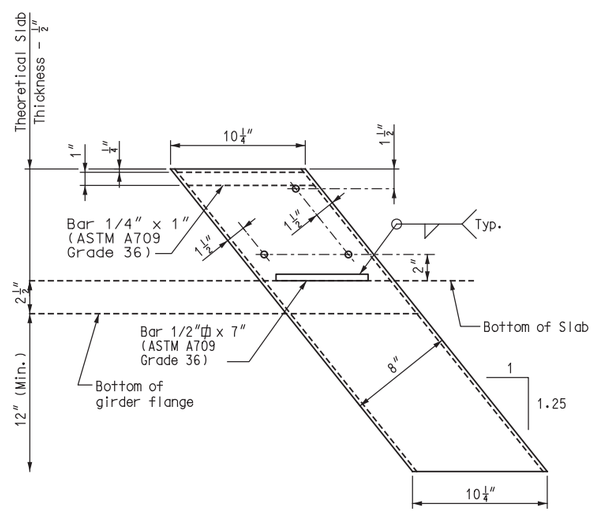

ELEVATION

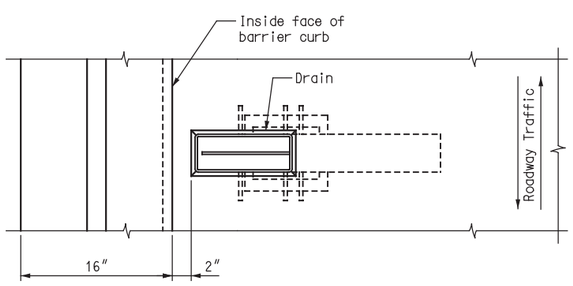

PART PLAN OF SLAB AT DRAIN

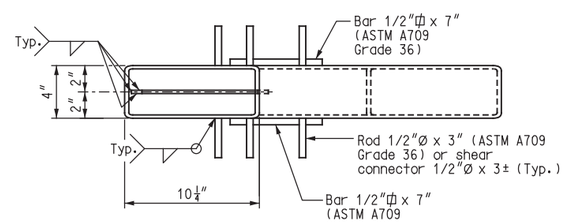

PLAN

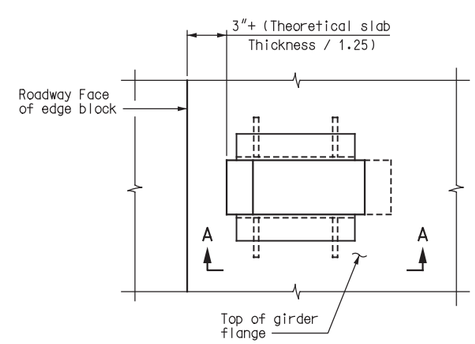

PART PLAN OF DRAIN BLOCKOUT

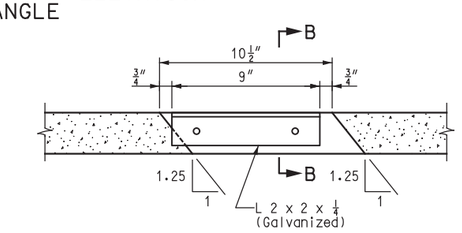

SECTION A-A

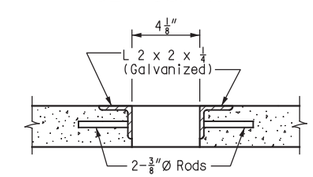

SECTION B-B

Notes:

Slab drains may be fabricated of either 1/4″ welded sheets of ASTM A709 Grade 36 steel or from 1/4″ structural steel tubing ASTM A500 or A501.

Outside dimensions of drains are 8″ x 4″.

Locate drains in the slab by dimensions shown in the Part Section Near Drain.

Shift reinforcing steel in field where necessary to clear drains.

The drains shall be galvanized in accordance with ASTM A123.

Shop drawings will not be required for the slab drains.

For Theoretical Slab Thickness @ Crown of Slab, see Sheet No. 9.

SLAB DRAIN DETAILS

Detailed APR 2020
Checked APR 2020

Note: This drawing is not to scale. Follow dimensions.

STATE OF MISSOURI
JEFFREY B. SMITH
NUMBER E-27175
REGISTERED PROFESSIONAL ENGINEER

THIS SHEET HAS BEEN SIGNED, SEALED, AND DATED ELECTRONICALLY.

DATE	
07/17/2020	
ROUTE: EE	STATE: MO
DISTRICT: BR	SHEET NO.: 8
COUNTY: HARRISON	
JOB NO.: J1S3253	
CONTRACT ID.	
PROJECT NO.	
BRIDGE NO.: R00751	

DATE	DESCRIPTION

MISSOURI HIGHWAYS AND TRANSPORTATION COMMISSION
105 WEST CAPITOL
JEFFERSON CITY, MO 65102
1-888-ASK-MODOT (1-888-275-6636)

HNTB
715 KIRK DRIVE
KANSAS CITY, MO 64105-1310
TELEPHONE (816) 472-1201
CERTIFICATE OF AUTHORITY
NO. 001270

IF A SEAL IS PRESENT ON THIS SHEET IT HAS BEEN ELECTRONICALLY SEALED AND DATED.

REV.

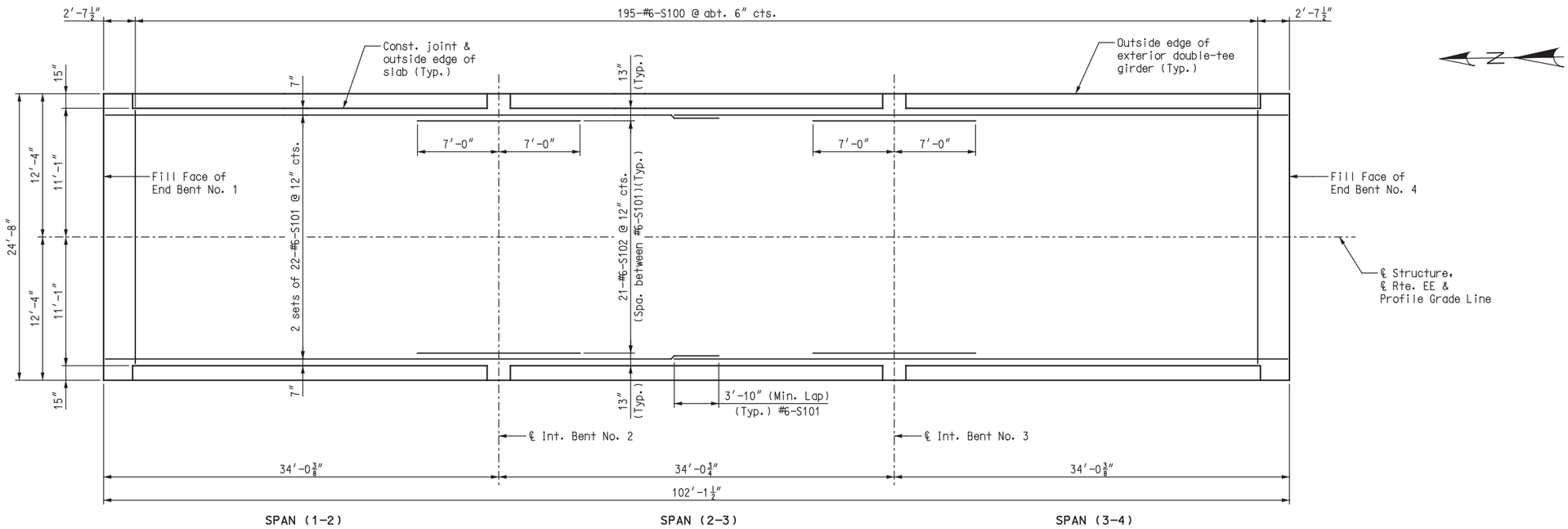

PLAN OF SLAB SHOWING REINFORCEMENT

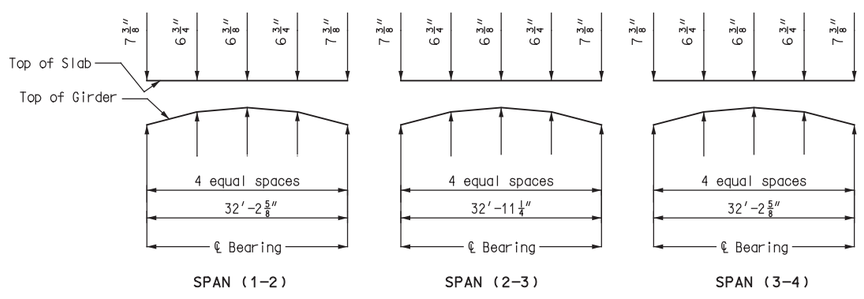

THEORETICAL SLAB THICKNESS @ CROWN OF SLAB

	Span (1-2)		Span (2-3)		Span (3-4)	
	"A"	"B"	"A"	"B"	"A"	"B"
All Girders	1″	1⅛″	⅞″	1″	1″	1⅛″

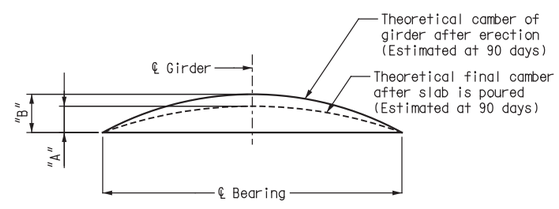

GIRDER CAMBER DIAGRAM

Camber at 1/4 point of girder is equal to 0.7125 x camber at centerline of girder.

Notes:

For Typical Section Thru Slab and Slab Pouring Sequence, see Sheet No. 10.

For details and reinforcement of Type B Barrier not shown, see Sheet No. 11.

For details and locations of slab drains, see Sheet No. 8.

Longitudinal slab dimensions are measured horizontally.

Slab thickness shall be adjusted for any difference in girder camber from that shown in camber diagram. Concrete in the slab is included in the Estimated Quantities for Slab on Concrete Adjacent Beam.

The slab is to be built parallel to grade and to a minimum thickness of 5″ (except varies from 5″ to 6⅜″ to provide ⅛″ per foot cross slope).

In order to maintain minimum slab thickness, it may be necessary to raise the grade uniformly throughout the structure. No payment will be made for additional labor or materials required for variation in thickness or necessary grade adjustment.

SLAB DETAILS

Detailed APR 2020
Checked MAY 2020

Note: This drawing is not to scale. Follow dimensions.

STATE OF MISSOURI
JEFFREY B. SMITH
NUMBER E-27175
REGISTERED PROFESSIONAL ENGINEER

THIS SHEET HAS BEEN SIGNED, SEALED, AND DATED ELECTRONICALLY.

DATE 07/17/2020
ROUTE EE | STATE MO
DISTRICT BR | SHEET NO. 9
COUNTY HARRISON
JOB NO. J1S3253
CONTRACT ID.
PROJECT NO.
BRIDGE NO. R00751

DESCRIPTION | DATE | REV.

IF A SEAL IS PRESENT ON THIS SHEET IT HAS BEEN ELECTRONICALLY SEALED AND DATED.

MISSOURI HIGHWAYS AND TRANSPORTATION COMMISSION
105 WEST CAPITOL
JEFFERSON CITY, MO 65102
1-888-ASK-MODOT (1-888-275-6636)

HNTB
715 KIRK DRIVE
KANSAS CITY, MO 64105-1310
TELEPHONE (816) 472-1201
CERTIFICATE OF AUTHORITY NO. 001270

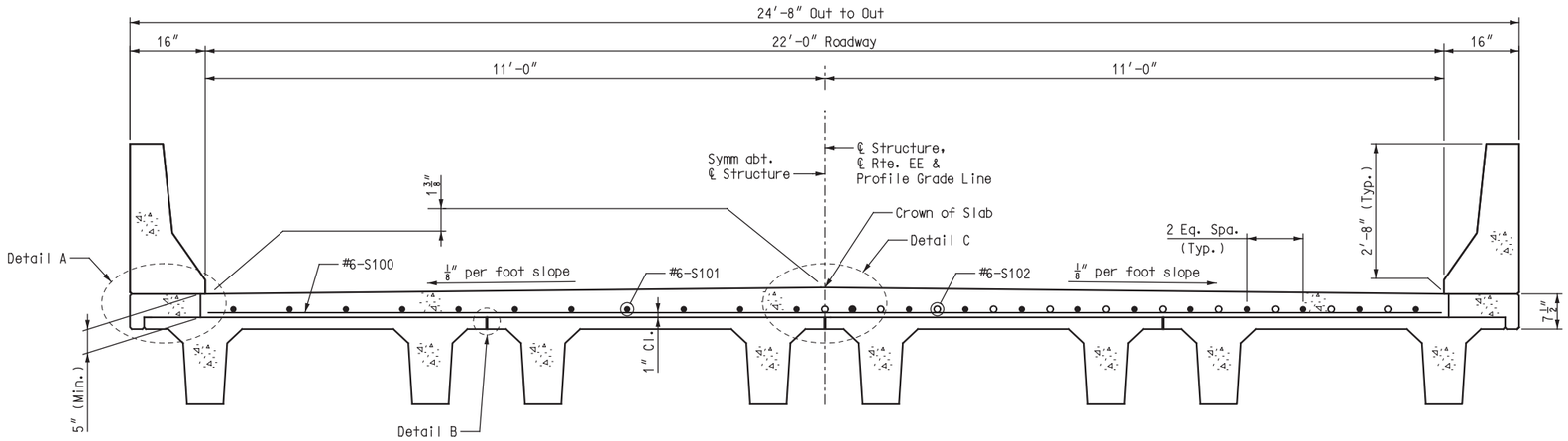

HALF SECTION NEAR ℄ SPAN

HALF SECTION NEAR INTERMEDIATE BENT

TYPICAL SECTION THRU SLAB

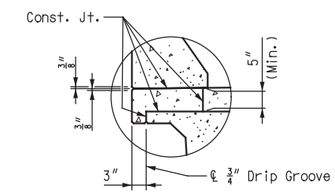

DETAIL A

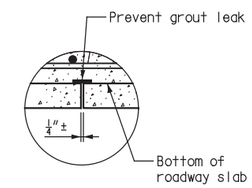

DETAIL B

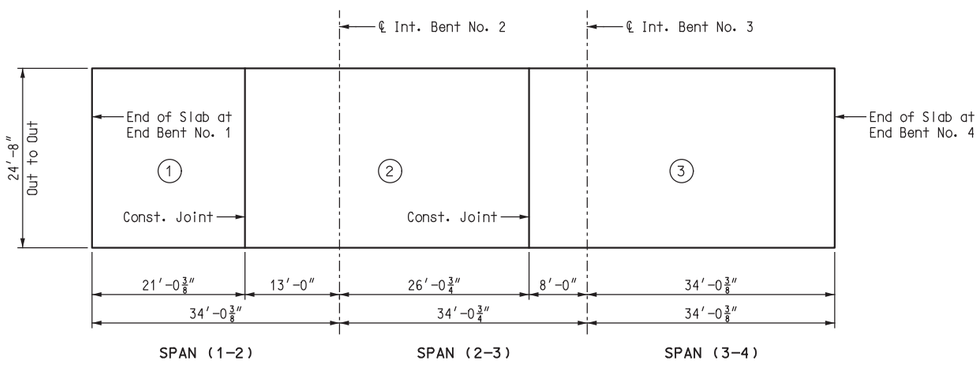

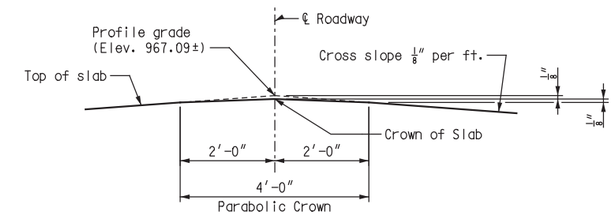

DETAIL C

	Sequence of Pours			Min. rate of pour cu. yds./hr.
	Direction			With retarder
Basic sequence	1	2	3	25
	End to 2	1 to 3	2 to end	
Alternate pours to the basic sequence are subject to the approval of the engineer in accordance with Sec 703.				
Alternate "A" pours	1 + 2		3	25
	End to 3		2 to end	
Alternate "B" pours	1 + 2 + 3			25
	End to end			

SLAB POURING SEQUENCE

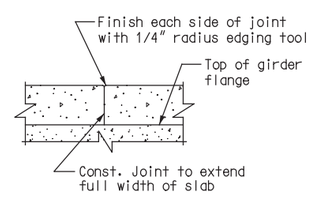

SLAB CONSTRUCTION JOINT

Notes:

For details and reinforcement of Type B Barrier not shown, see Sheet No. 11.

The contractor shall furnish an approved retarder to retard the set of the concrete to 2.5 hours and shall pour and satisfactorily finish the slab pours at the rate shown on this sheet.

The diaphragms at intermediate bents and integral end bents shall be poured a minimum of 30 minutes and a maximum of 2 hours before the slab is poured across the diaphragms.

SLAB CROSS SECTION AND POURING SEQUENCE

Detailed APR 2020
Checked MAY 2020

Note: This drawing is not to scale. Follow dimensions.

STATE OF MISSOURI
JEFFREY B. SMITH
NUMBER E-27175
REGISTERED PROFESSIONAL ENGINEER

THIS SHEET HAS BEEN SIGNED, SEALED, AND DATED ELECTRONICALLY.

DATE 07/17/2020
ROUTE EE | STATE MO
DISTRICT BR | SHEET NO. 10
COUNTY HARRISON
JOB NO. J1S3253
CONTRACT ID.
PROJECT NO.
BRIDGE NO. R00751

DESCRIPTION | DATE

IF A SEAL IS PRESENT ON THIS SHEET IT HAS BEEN ELECTRONICALLY SEALED AND DATED.

MISSOURI HIGHWAYS AND TRANSPORTATION COMMISSION
105 WEST CAPITOL
JEFFERSON CITY, MO 65102
1-888-ASK-MODOT (1-888-275-6636)

HNTB
715 KIRK DRIVE
KANSAS CITY, MO 64105-1310
TELEPHONE (816) 472-1201
CERTIFICATE OF AUTHORITY
NO. 001270

REV.

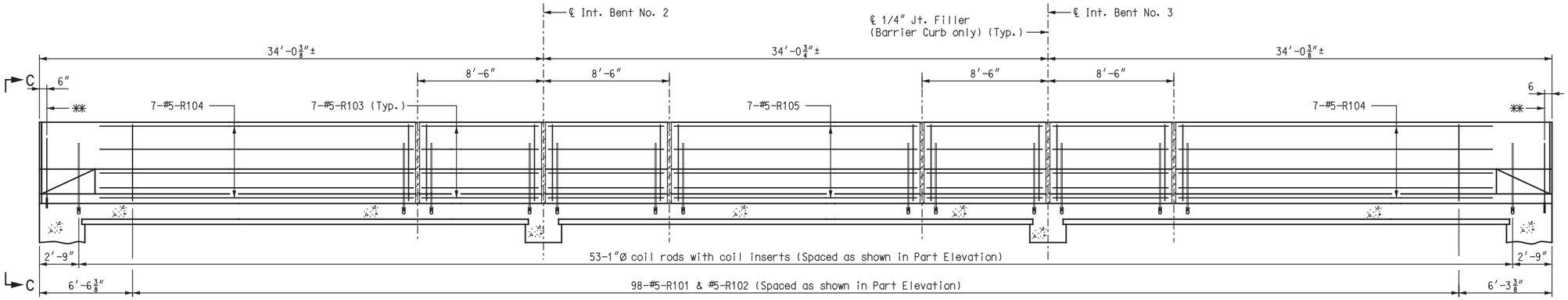

ELEVATION OF TYPE B BARRIER

(Left barrier shown, right barrier similar)

Longitudinal dimensions are horizontal.

✱✱ 3/4″Ø Resin Anchor System installed on existing wing (4 req′d)

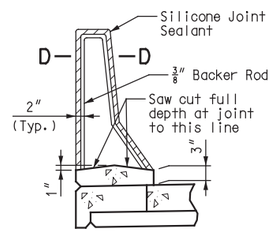

SECTION THRU SAW CUT JOINT

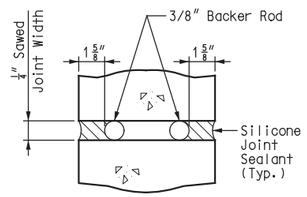

SECTION D-D

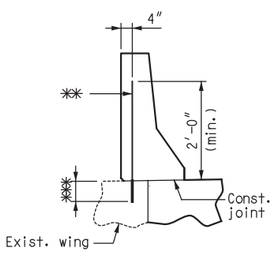

PART ELEVATION C-C

✱✱✱ Manufacturer's recommended embedment depth (5″ min.)

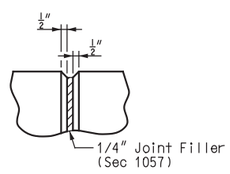

PART ELEVATION AT FORMED JOINT

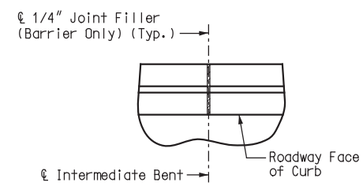

PART PLAN SHOWING JOINT LOCATION

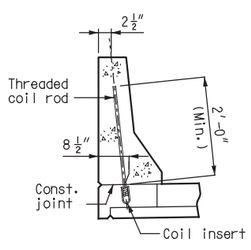

PART SECTION A-A

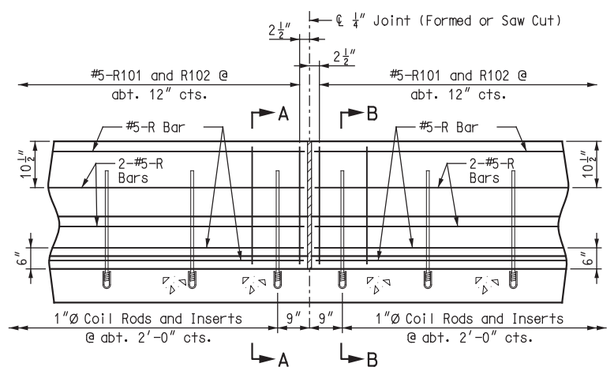

PART ELEVATION OF BARRIER

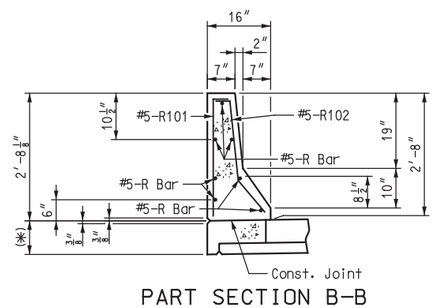

PART SECTION B-B

Use a minimum lap of 3′-1″ for #5 horizontal Type B Barrier bars.

The cross-sectional area above the slab = 2.27 sq. ft.

(✱) 2 1/2″ + Theoretical slab thickness at face of edge block.

GENERAL NOTES:

Conventional forming shall be used, and saw cut joint may be used.

Top of Type B Barrier shall be built parallel to grade with barrier curb joints normal to grade.

All exposed edges of Type B Barrier shall have either a 1/2-inch radius or a 3/8-inch bevel, unless otherwise noted.

Payment for all concrete and reinforcement, complete in place, will be considered completely covered by the contract unit price for Type B Barrier per linear foot.

Concrete in the Type B Barrier shall be Class B-1.

Measurement of Type B Barrier is to the nearest linear foot for each structure, measured along the outside top of slab from end of slab to end of slab.

Concrete traffic barrier delineators shall be placed on top of the Type B Barrier as shown on Missouri Standard Plans 617.10 and in accordance with Sec 617. Delineators on bridges with two-lane, two-way traffic shall have retroreflective sheeting on both sides. Concrete traffic barrier delineators will be considered completely covered by the contract unit price for Type B Barrier.

Coil inserts shall have concrete ultimate pullout strength of not less than 36,000 pounds in 5,000 psi concrete and an ultimate tensile strength of not less than 36,000 pounds.

Threaded coil rods shall have an ultimate capacity of 36,000 pounds. All coil inserts and threaded coil rods shall be galvanized in accordance with ASTM A153.

Payment for furnishing and installing coil inserts and threaded coil rods will be considered completely covered by the contract unit price for Type B Barrier.

DETAILS OF TYPE B BARRIER

Detailed MAY 2020
Checked MAY 2020

Note: This drawing is not to scale. Follow dimensions.

STATE OF MISSOURI
JEFFREY B. SMITH
NUMBER E-27175
REGISTERED PROFESSIONAL ENGINEER

THIS SHEET HAS BEEN SIGNED, SEALED, AND DATED ELECTRONICALLY.

DATE 07/17/2020	
ROUTE EE	STATE MO
DISTRICT BR	SHEET NO. 11
COUNTY HARRISON	
JOB NO. J1S3253	
CONTRACT ID.	
PROJECT NO.	
BRIDGE NO. R00751	

DESCRIPTION | DATE

IF A SEAL IS PRESENT ON THIS SHEET IT HAS BEEN ELECTRONICALLY SEALED AND DATED.

MISSOURI HIGHWAYS AND TRANSPORTATION COMMISSION
105 WEST CAPITOL
JEFFERSON CITY, MO 65102
1-888-ASK-MODOT (1-888-275-6636)

HNTB
715 KIRK DRIVE
KANSAS CITY, MO 64105-1310
TELEPHONE (816) 472-1201
CERTIFICATE OF AUTHORITY NO. 001270

REV.

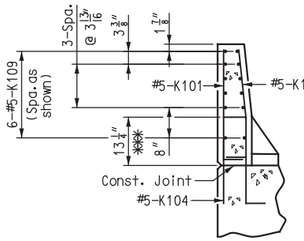

SECTION A-A

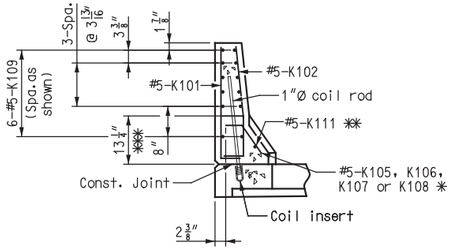

SECTION B-B

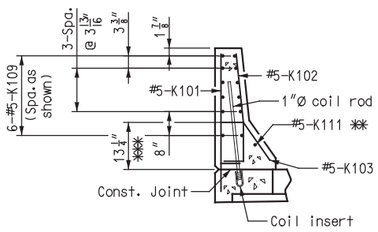

SECTION C-C
(#5-R104 Bars not shown for clarity)

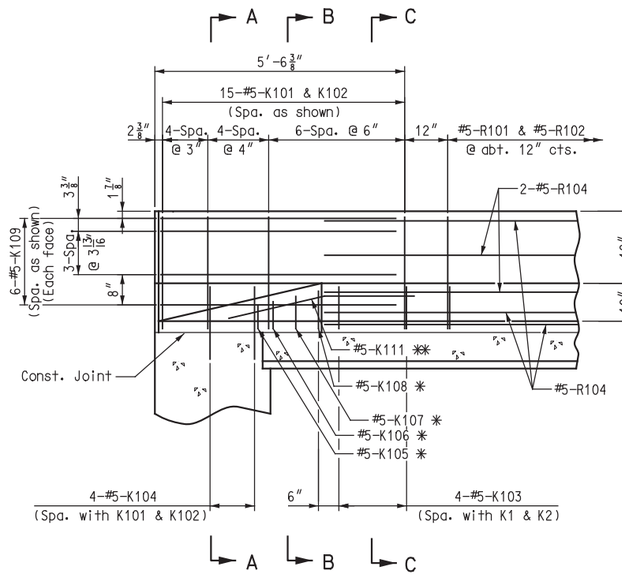

ELEVATION

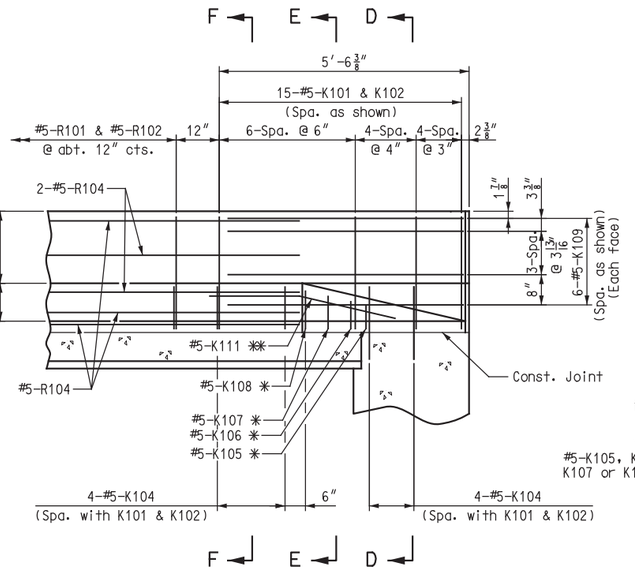

ELEVATION

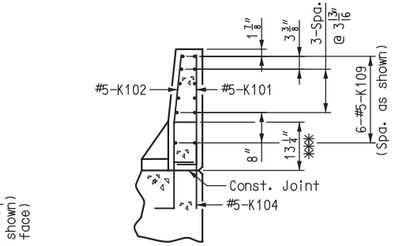

SECTION D-D

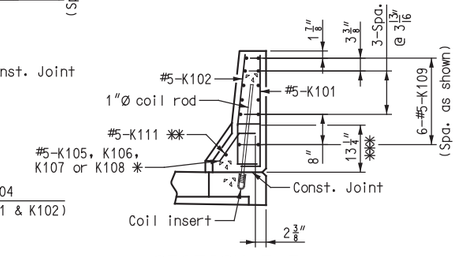

SECTION E-E

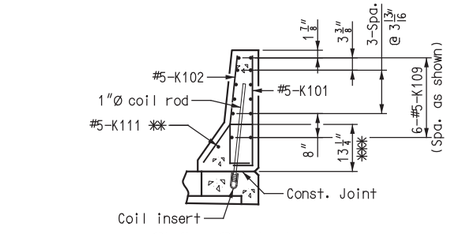

SECTION F-F
(#5-R104 Bars not shown for clarity)

✱ Space with #5-K101 & K102 bars.

✱✱ Fit bar to follow transition face of curb.

✱✱✱ To top of bar

1"Ø coil tie rods and coil inserts not shown for clarity.

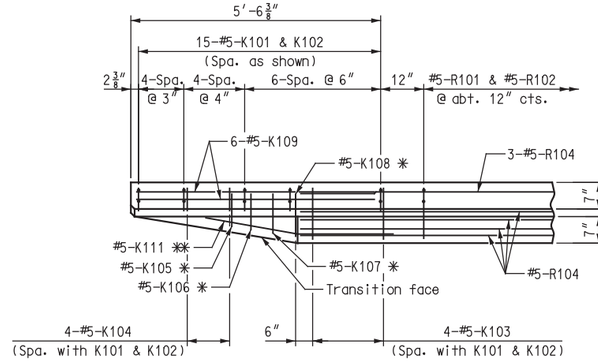

PLAN

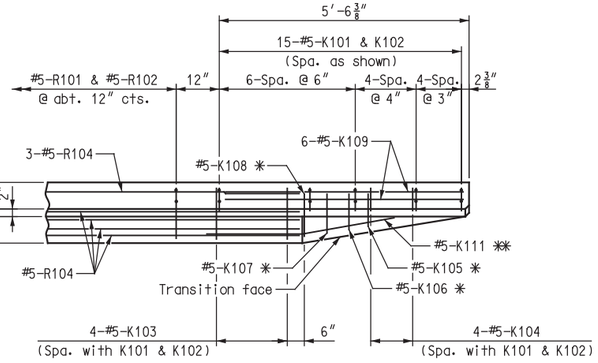

PLAN

(Left barrier shown, right barrier similar)

1"Ø coil tie rods and coil inserts not shown for clarity.

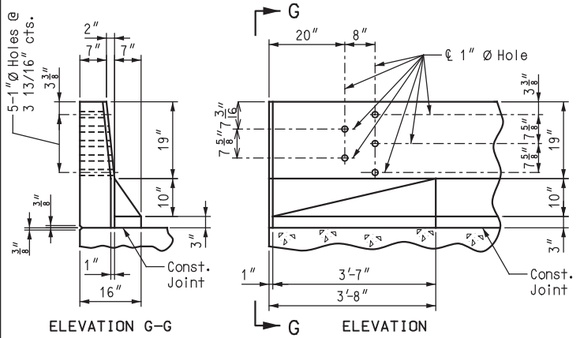

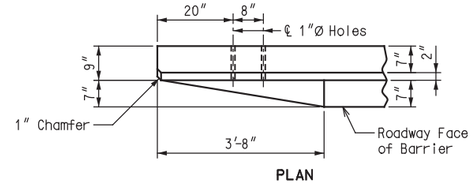

PLAN

DETAILS OF GUARD RAIL ATTACHMENT

Notes:

Use a minimum lap of 3'-1" between K109 and R bars.

Concrete traffic barrier delineators shall be placed on top of the barrier as shown on Missouri Standard Plan 617.10 and in accordance with Sec 617. Delineators on bridges with two-lane, two-way traffic shall have retroreflective sheeting on both sides. Concrete traffic barrier delineators will be considered completely covered by the contract unit price for Type B Barrier.

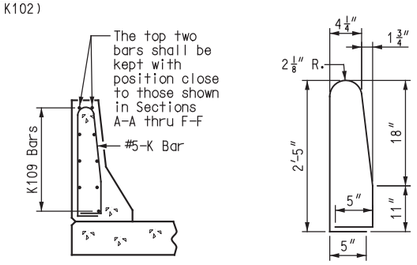

K101-K102 BAR PERMISSIBLE ALTERNATE SHAPE
(K103 or K104 thru K108 bars not shown for clarity)

The K101-K102 bar combination may be furnished as one bar as shown, at the contractor's option.

TYPE B BARRIER AT END BENTS

Detailed MAY 2020
Checked MAY 2020

Note: This drawing is not to scale. Follow dimensions.

STATE OF MISSOURI
JEFFREY B. SMITH
NUMBER E-27175
REGISTERED PROFESSIONAL ENGINEER

THIS SHEET HAS BEEN SIGNED, SEALED, AND DATED ELECTRONICALLY.

DATE	
07/17/2020	
ROUTE: EE	STATE: MO
DISTRICT: BR	SHEET NO.: 12
COUNTY: HARRISON	
JOB NO.: J1S3253	
CONTRACT ID.	
PROJECT NO.	
BRIDGE NO.: R00751	

DATE	DESCRIPTION

IF A SEAL IS PRESENT ON THIS SHEET IT HAS BEEN ELECTRONICALLY SEALED AND DATED.

MISSOURI HIGHWAYS AND TRANSPORTATION COMMISSION
105 WEST CAPITOL
JEFFERSON CITY, MO 65102
1-888-ASK-MODOT (1-888-275-6636)

HNTB
715 KIRK DRIVE
KANSAS CITY, MO 64105-1310
TELEPHONE (816) 472-1201
CERTIFICATE OF AUTHORITY
NO. 001270

REV.

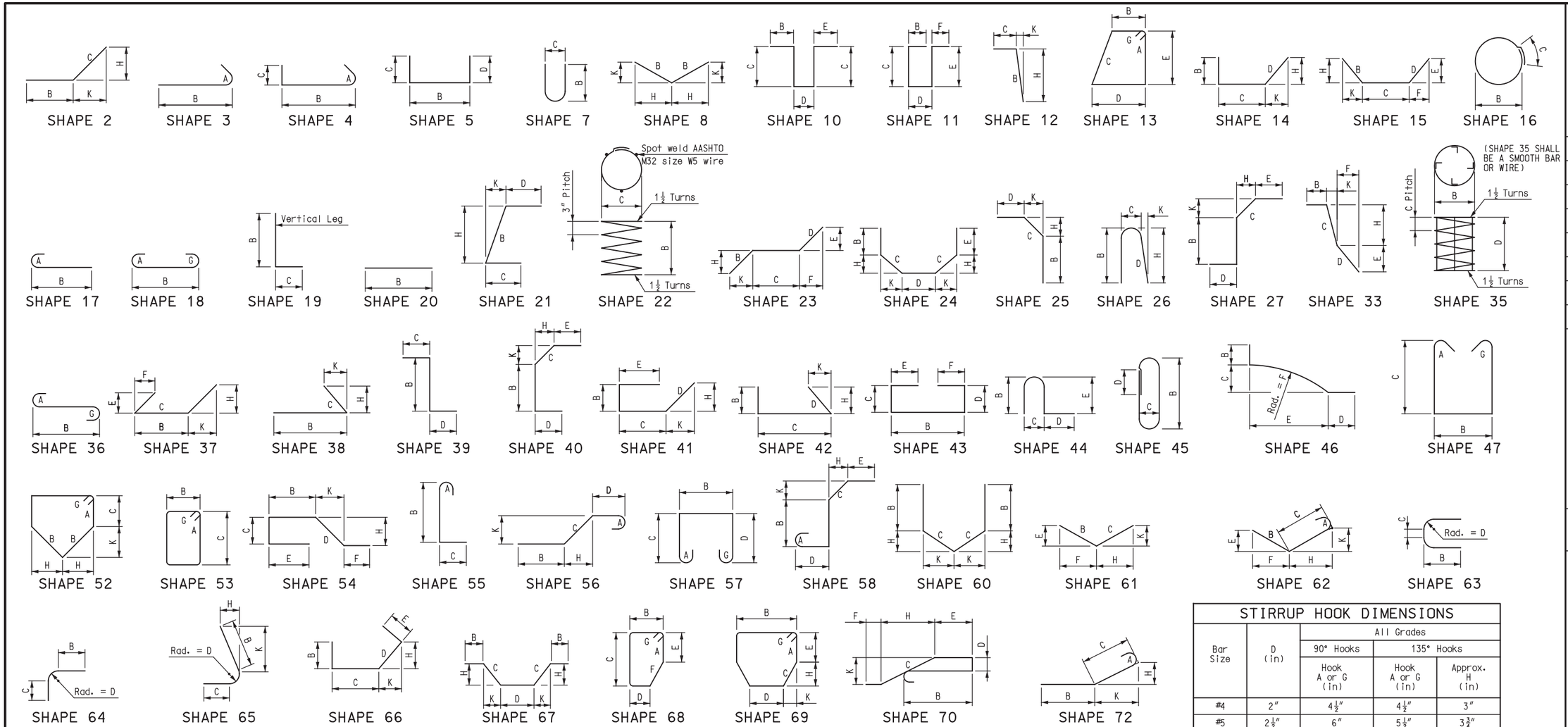

STIRRUP HOOK DIMENSIONS

Bar Size	D (in)	All Grades		
		90° Hooks	135° Hooks	
		Hook A or G (in)	Hook A or G (in)	Approx. H (in)
#4	2″	4½″	4½″	3″
#5	2½″	6″	5½″	3¾″
#6	4½″	12″	8″	4½″

END HOOK DIMENSIONS

Bar Size	D (in)	All Grades		
		180° Hooks		90° Hooks
		Hook A or G (in)	J (in)	Hook A or G (in)
#3	2¼″	5″	3″	6″
#4	3″	6″	4″	8″
#5	3¾″	7″	5″	10″
#6	4½″	8″	6″	12″
#7	5¼″	10″	7″	14″
#8	6″	11″	8″	16″
#9	9½″	15″	11¾″	19″
#10	10¾″	17″	13¼″	22″
#11	12″	19″	14¾″	2′-0″
#14	18¼″	2′-3″	21¾″	2′-7″
#18	2′-0″	3′-0″	2′-4½″	3′-5″

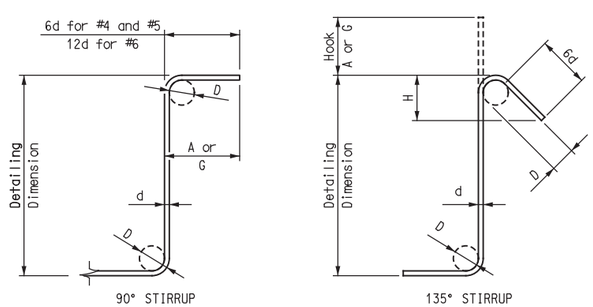

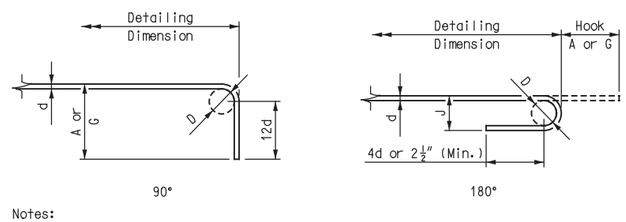

Notes:

All standard hooks and bends other than 180 degree are to be bent with same procedure as for 90 degree standard hooks.

Hooks and bends shall be in accordance with the procedures as shown on this sheet.

Nominal lengths are based on out-to-out dimensions shown in bending diagrams and are listed for fabricators use. (Nearest inch)

Pay weights are based on actual lengths.

Unless otherwise noted, diameter "D" is the same for all bends and hooks on a bar.

E = Epoxy coated reinforcement.

S = Stirrup.

X = Bar is included in substructure quantities.

V = Bar dimensions vary in equal increments between dimensions shown on this line and the following line.

No. ea. = Number of bars of each length.

Actual lengths are measured along centerline bar to the nearest inch.

Four angle or channel spacers are required for each column spiral. Spacers are to be placed on inside of spirals. Length and weight of column spirals do not include splices or spacers.

Reinforcing steel (Grade 60) fy = 60,000 psi.

BAR BENDING DIAGRAMS

Detailed APR 2020
Checked MAY 2020

Note: This drawing is not to scale. Follow dimensions.

STATE OF MISSOURI
JEFFREY B. SMITH
NUMBER E-27175
REGISTERED PROFESSIONAL ENGINEER

THIS SHEET HAS BEEN SIGNED, SEALED, AND DATED ELECTRONICALLY.

DATE	
07/17/2020	
ROUTE: EE	STATE: MO
DISTRICT: BR	SHEET NO.: 13
COUNTY: HARRISON	
JOB NO.: J1S3253	
CONTRACT ID.	
PROJECT NO.	
BRIDGE NO.: R00751	

DATE	DESCRIPTION	REV.

IF A SEAL IS PRESENT ON THIS SHEET IT HAS BEEN ELECTRONICALLY SEALED AND DATED.

MISSOURI HIGHWAYS AND TRANSPORTATION COMMISSION
105 WEST CAPITOL
JEFFERSON CITY, MO 65102
1-888-ASK-MODOT (1-888-275-6636)

HNTB
715 KIRK DRIVE
KANSAS CITY, MO 64105-1310
TELEPHONE (816) 472-1201
CERTIFICATE OF AUTHORITY
NO. 001270

BILL OF REINFORCING STEEL

NO. REQ'D.	MARK NO. SIZE MARK	LOCATION	EPOXY (E)	SHAPE NO.	STIRRUP (S)	SUBSTR. (X)	VARIES (V)	NO. EACH	DIMENSIONS B FT. IN.	C FT. IN.	D FT. IN.	E FT. IN.	F FT. IN.	H FT. IN.	K FT. IN.	NOMINAL LENGTH FT. IN.	ACTUAL LENGTH FT. IN.	WEIGHT LBS.
		SUPERSTRUCTURE																
		END BENT NO. 1																
2	6H100	Diaphragm	E	20					24′-0″							24′-0″	24′-0″	72
8	6H101	Diaphragm	E	20					3′-0″							3′-0″	3′-0″	36
6	6H102	Diaphragm	E	20					12″							12″	12″	9
2	5H103	Diaphragm	E	20					25′-11″							25′-11″	25′-11″	54
1	5H104	Strand Tie Bar	E	20					24′-0″							24′-0″	24′-0″	25
2	6H105	Slab	E	20					24′-0″							24′-0″	24′-0″	72
2	6H106	Slab	E	20					25′-11″							25′-11″	25′-11″	78
4	6H107	Diaphragm	E	19	S				14″	17″						2′-7″	2′-6″	15
29	6U100	Diaphragm	E	19	S				21″	4′-7″						6′-4″	6′-3″	272
2	5U101	Diaphragm	E	5	S				14″	21″	21″					4′-8″	4′-5″	9
20	5U102	Diaphragm	E	5	S				2′-2″	21″	21″					5′-8″	5′-5″	113
		END BENT NO. 4																
2	6H400	Diaphragm	E	20					24′-0″							24′-0″	24′-0″	72
8	6H401	Diaphragm	E	20					3′-0″							3′-0″	3′-0″	36
6	6H402	Diaphragm	E	20					12″							12″	12″	9
2	5H403	Diaphragm	E	20					25′-11″							25′-11″	25′-11″	54
1	5H404	Strand Tie Bar	E	20					24′-0″							24′-0″	24′-0″	25
2	6H405	Slab	E	20					24′-0″							24′-0″	24′-0″	72
2	6H406	Slab	E	20					25′-11″							25′-11″	25′-11″	78
4	6H407	Diaphragm	E	19	S				14″	17″						2′-7″	2′-6″	15
29	6U400	Diaphragm	E	19	S				21″	4′-7″						6′-4″	6′-3″	272
2	5U401	Diaphragm	E	5	S				14″	21″	21″					4′-8″	4′-5″	9
20	5U402	Diaphragm	E	5	S				2′-2″	21″	21″					5′-8″	5′-5″	113
		DIAPH. AT INT. BENT NO. 2																
4	5H250	Diaphragm	E	20					24′-3″							24′-3″	24′-3″	101
12	5H251	Diaphragm	E	19	S				8″	3′-2″						3′-10″	3′-9″	47
24	5H252	Diaphragm	E	20					3′-0″							3′-0″	3′-0″	75
18	5H253	Diaphragm	E	20					12″							12″	12″	19
3	5H254	Strand Tie Bar	E	20					24′-3″							24′-3″	24′-3″	76
8	5U250	Diaphragm	E	19	S				21″	3′-1″						4′-10″	4′-9″	40
36	5U251	Diaphragm	E	39	S				19″	12″	19″					4′-2″	3′-11″	147
		DIAPH. AT INT. BENT NO. 3																
4	5H350	Diaphragm	E	20					24′-3″							24′-3″	24′-3″	101
12	5H351	Diaphragm	E	19	S				8″	3′-2″						3′-10″	3′-9″	47
24	5H352	Diaphragm	E	20					3′-0″							3′-0″	3′-0″	75
18	5H353	Diaphragm	E	20					12″							12″	12″	19
3	5H354	Strand Tie Bar	E	20					24′-3″							24′-3″	24′-3″	76
8	5U350	Diaphragm	E	19	S				21″	3′-1″						4′-10″	4′-9″	40
36	5U351	Diaphragm	E	39	S				19″	12″	19″					4′-2″	3′-11″	147
		SLAB ON CONCRETE ADJACENT BEAM																
195	6S100	Slab	E	20					21′-11″							21′-11″	21′-11″	6,419
44	6S101	Slab	E	20					52′-11″							52′-11″	52′-11″	3,497
42	6S102	Slab	E	20					14′-0″							14′-0″	14′-0″	883

BILL OF REINFORCING STEEL

NO. REQ'D.	MARK NO. SIZE MARK	LOCATION	EPOXY (E)	SHAPE NO.	STIRRUP (S)	SUBSTR. (X)	VARIES (V)	NO. EACH	DIMENSIONS B FT. IN.	C FT. IN.	D FT. IN.	E FT. IN.	F FT. IN.	H FT. IN.	K FT. IN.	NOMINAL LENGTH FT. IN.	ACTUAL LENGTH FT. IN.	WEIGHT LBS.
		TYPE B BARRIER																
60	5K101	Barrier	E	19	S				2′-5″	5 1/8″						2′-11″	2′-9″	172
60	5K102	Barrier	E	14	S				5 1/8″	11 1/8″	18″			2″	17 7/8″	2′-11″	2′-9″	172
16	5K103	Barrier	E	14	S				11 1/4″	5 1/8″	12″			9 7/8″	6 7/8″	2′-5″	2′-3″	38
16	5K104	Barrier	E	10	S				12″	17″	6″					4′-4″	4′-0″	67
4	5K105	Barrier	E	12	S				6 3/4″	4 3/8″				5 1/2″	4″	12″	12″	4
4	5K106	Barrier	E	12	S				7 7/8″	4 3/8″				6 1/2″	4 1/2″	13″	13″	5
4	5K107	Barrier	E	12	S				9 5/8″	4 3/8″				7 7/8″	5 1/2″	14″	14″	5
4	5K108	Barrier	E	12	S				11 1/4″	4 3/8″				9 1/4″	6 1/2″	16″	16″	6
48	5K109	Barrier	E	20					6′-7″							6′-7″	6′-7″	330
4	5K111	Barrier	E	8	S				2′-2 1/8″					2′-2″	2 3/8″	4′-5″	4′-5″	18
196	5R101	Barrier	E	19	S				2′-6″	3 1/2″						2′-10″	2′-8″	545
196	5R102	Barrier	E	33	S				3 1/2″	17 1/2″	13 1/8″	10 3/4″	7 1/2″	17 3/8″	1 7/8″	2′-10″	2′-9″	562
56	5R103	Barrier	E	20					8′-3″							8′-3″	8′-3″	482
28	5R104	Barrier	E	20					21′-7″							21′-7″	21′-7″	630
14	5R105	Barrier	E	20					16′-9″							16′-9″	16′-9″	245
		TOTALS																
		SUPERSTRUCTURE																
	5		E															1,412
	6		E															1,108
		TOTAL	E															2,520
		SLAB ON CONCRETE ADJACENT BEAM																
	6		E															10,799
		TOTAL	E															10,799
		TYPE B BARRIER																
	5		E															3,281
		TOTAL	E															3,281

Note: For bar bending diagram, see Sheet No. 13.

BILL OF REINFORCING STEEL

Detailed MAY 2020
Checked MAY 2020

Note: This drawing is not to scale. Follow dimensions.

STATE OF MISSOURI
JEFFREY B. SMITH
NUMBER E-27175
REGISTERED PROFESSIONAL ENGINEER

THIS SHEET HAS BEEN SIGNED, SEALED, AND DATED ELECTRONICALLY.

DATE 07/17/2020
ROUTE EE | STATE MO
DISTRICT BR | SHEET NO. 14
COUNTY HARRISON
JOB NO. J1S3253
CONTRACT ID.
PROJECT NO.
BRIDGE NO. R00751

DESCRIPTION | DATE

IF A SEAL IS PRESENT ON THIS SHEET IT HAS BEEN ELECTRONICALLY SEALED AND DATED.

MISSOURI HIGHWAYS AND TRANSPORTATION COMMISSION
105 WEST CAPITOL
JEFFERSON CITY, MO 65102
1-888-ASK-MODOT (1-888-275-6636)

HNTB
715 KIRK DRIVE
KANSAS CITY, MO 64105-1310
TELEPHONE (816) 472-1201
CERTIFICATE OF AUTHORITY NO. 001270

REV.