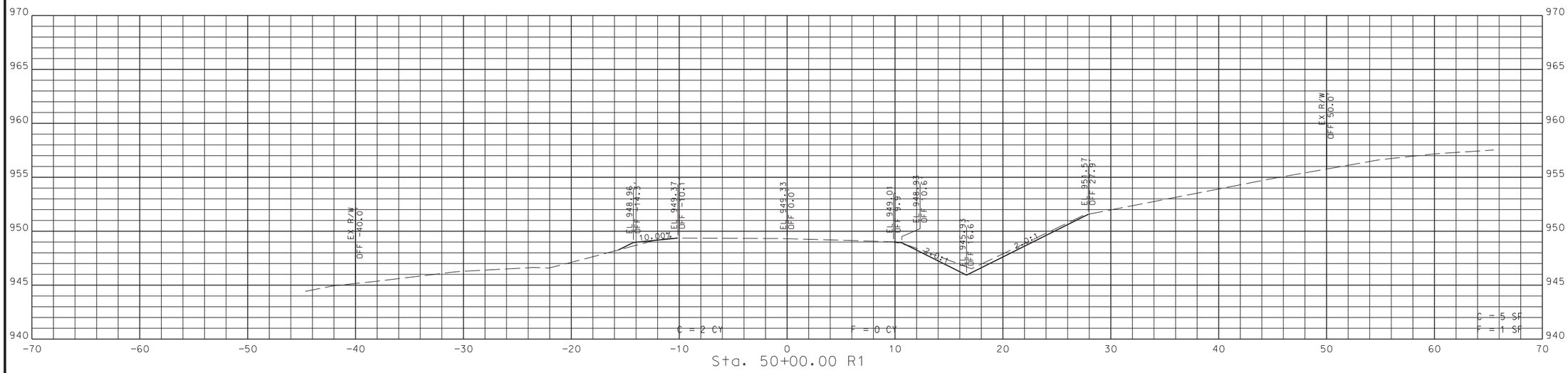

Sta. 50+00.00 R1

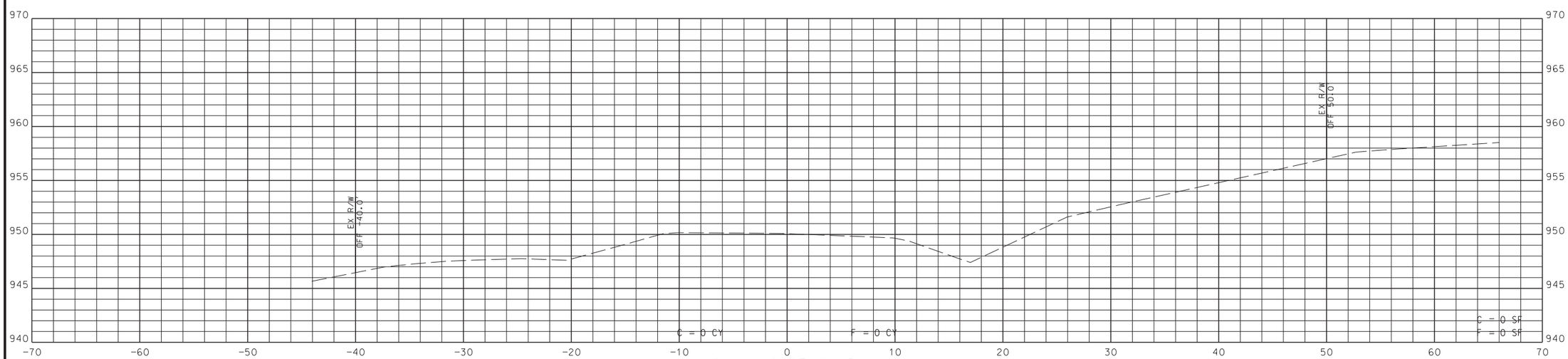

Sta. 49+83.24 R1

STA. 49+83.24 R1 TO STA. 50+00.00 R1

STATE OF MISSOURI
JASON MICHAEL SHAFER
NUMBER PE-2010019596
PROFESSIONAL ENGINEER

THIS SHEET HAS BEEN SIGNED, SEALED AND DATED ELECTRONICALLY.

DATE PREPARED	6/11/2020
ROUTE	123
STATE	MO
DISTRICT	SW
SHEET NO.	1
COUNTY	POLK
JOB NO.	J7S3205
CONTRACT ID.	
PROJECT NO.	
BRIDGE NO.	A8871

DATE	DESCRIPTION

IF A SEAL IS PRESENT ON THIS SHEET IT HAS BEEN ELECTRONICALLY SEALED AND DATED.

MISSOURI HIGHWAYS AND TRANSPORTATION COMMISSION

MoDOT

105 WEST CAPITOL
JEFFERSON CITY, MO 65102
1-888-ASK-MODOT (1-888-275-6636)

TREKK DESIGN GROUP, LLC

1411 East 104th St.
Kansas City, MO 64131
Tel (816) 874-4655
Fax (816) 874-4675
www.trekkdesigngroup.com

Missouri Cert. of Authority 2002010300

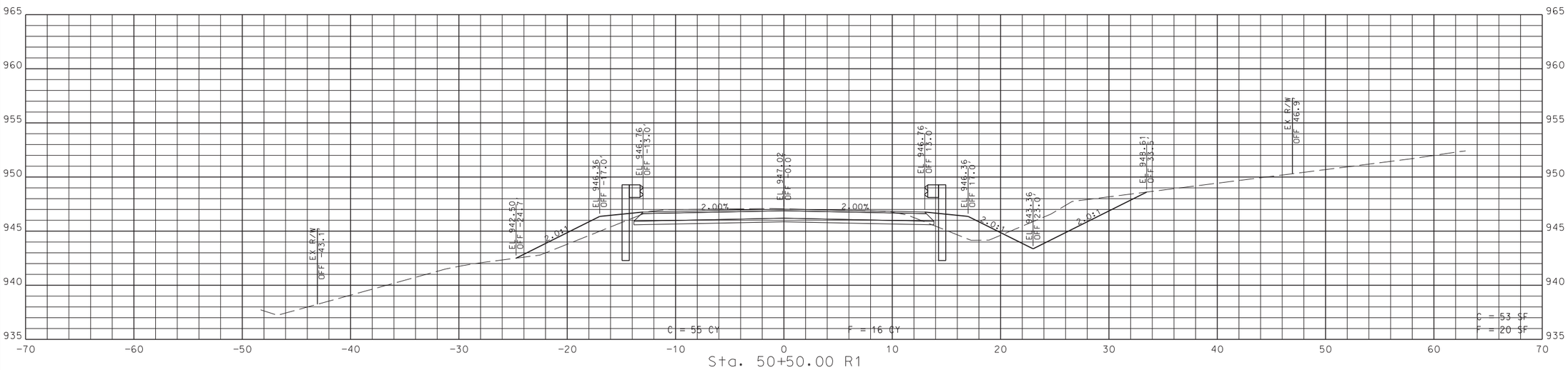

Sta. 50+50.00 R1

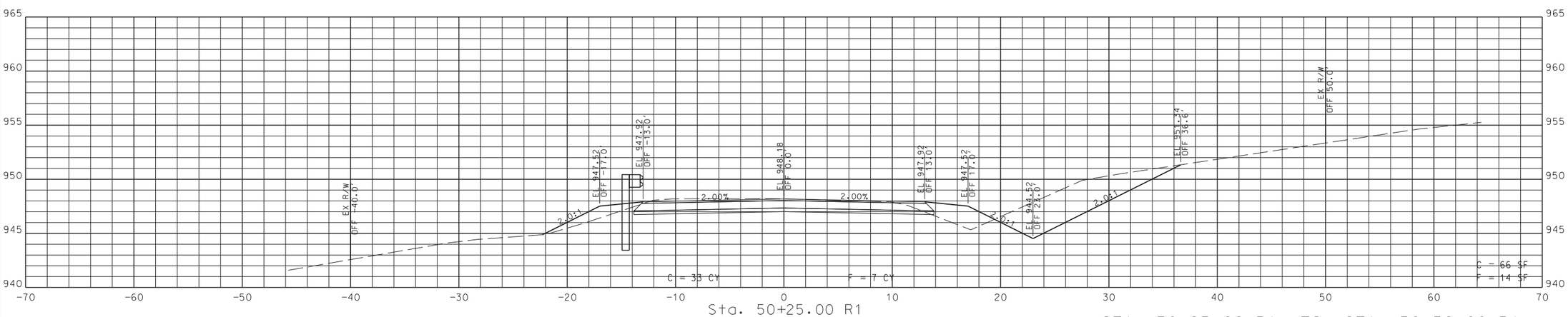

Sta. 50+25.00 R1

STA. 50+25.00 R1 TO STA. 50+50.00 R1

STATE OF MISSOURI
JASON MICHAEL SHAFER
NUMBER PE-2010019596
PROFESSIONAL ENGINEER

THIS SHEET HAS BEEN INDEXED, SEALED AND DATED ELECTRONICALLY.

DATE PREPARED	6/11/2020
ROUTE	123
STATE	MO
DISTRICT	SW
SHEET NO.	2
COUNTY	POLK
JOB NO.	J7S3205
CONTRACT ID.	
PROJECT NO.	
BRIDGE NO.	A8871

DATE	DESCRIPTION

MISSOURI HIGHWAYS AND TRANSPORTATION COMMISSION

105 WEST CAPITOL
JEFFERSON CITY, MO 65102
1-888-ASK-MODOT (1-888-275-6636)

1411 East 104th St.
Kansas City, MO 64131
Tel (816) 874-4655
Fax (816) 874-4675
www.trekkdesigngroup.com

Missouri Cert. of Authority 2002010300

TREKK DESIGN GROUP, LLC

IF A SEAL IS PRESENT ON THIS SHEET IT HAS BEEN ELECTRONICALLY SEALED AND DATED.

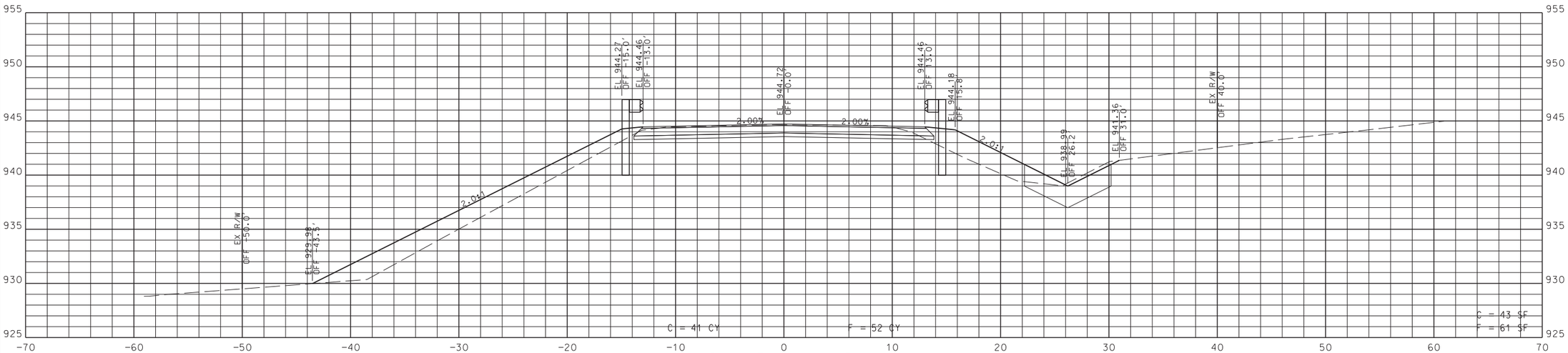

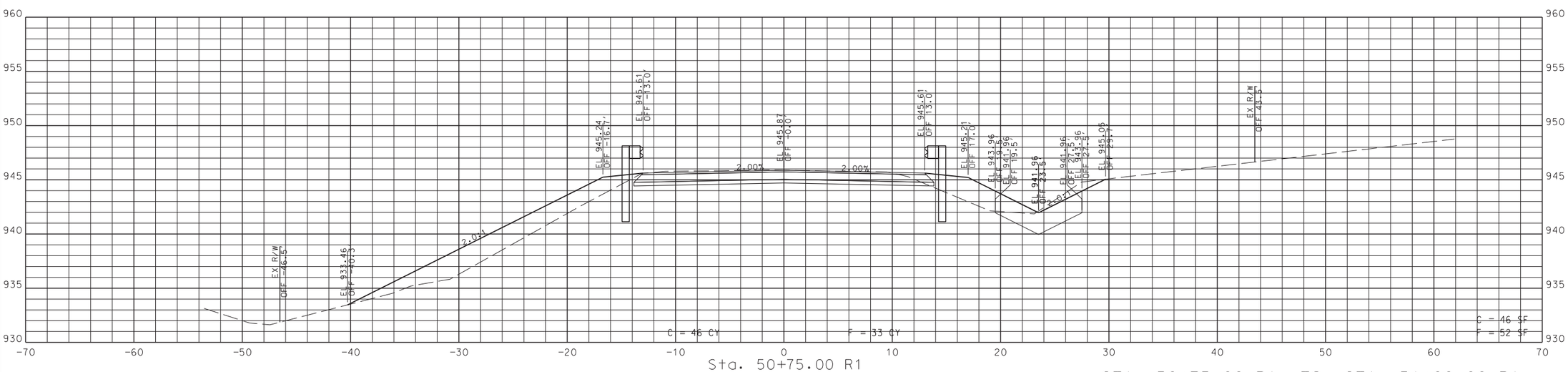

STA. 50+75.00 R1 TO STA. 51+00.00 R1

STATE OF MISSOURI
JASON MICHAEL SHAFER
NUMBER PE-2010019596
PROFESSIONAL ENGINEER

THIS SHEET HAS BEEN INDEXED, SEALED AND DATED ELECTRONICALLY.

DATE PREPARED	6/11/2020
ROUTE	123
STATE	MO
DISTRICT	SW
SHEET NO.	3
COUNTY	POLK
JOB NO.	J7S3205
CONTRACT ID.	
PROJECT NO.	
BRIDGE NO.	A8871

DATE	DESCRIPTION

MISSOURI HIGHWAYS AND TRANSPORTATION COMMISSION

105 WEST CAPITOL
JEFFERSON CITY, MO 65102
1-888-ASK-MODOT (1-888-275-6636)

1411 East 104th St.
Kansas City, MO 64131
Tel (816) 874-4655
Fax (816) 874-4675
www.trekkdesigngroup.com

Missouri Cert. of Authority 2002010300

TREKK DESIGN GROUP, LLC

IF A SEAL IS PRESENT ON THIS SHEET IT HAS BEEN ELECTRONICALLY SEALED AND DATED.

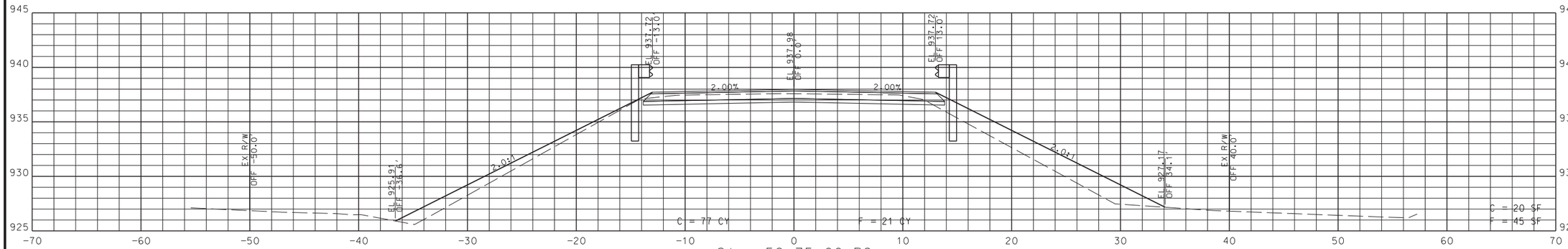

Sta. 52+75.00 R2

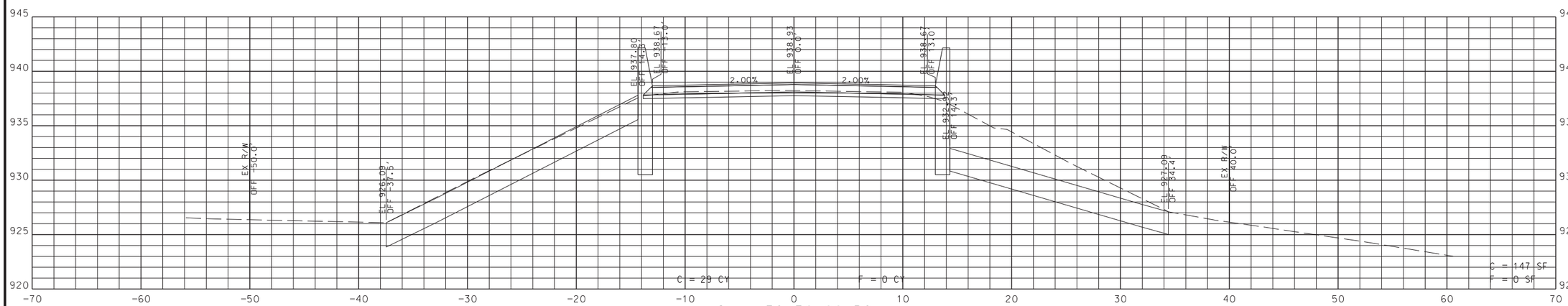

Sta. 52+50.00 R2

BRIDGE EXCEPTION
STA 51+27.32 TO STA 52+44.63

SPILL SLOPES
C = 439 CY F = 2 CY

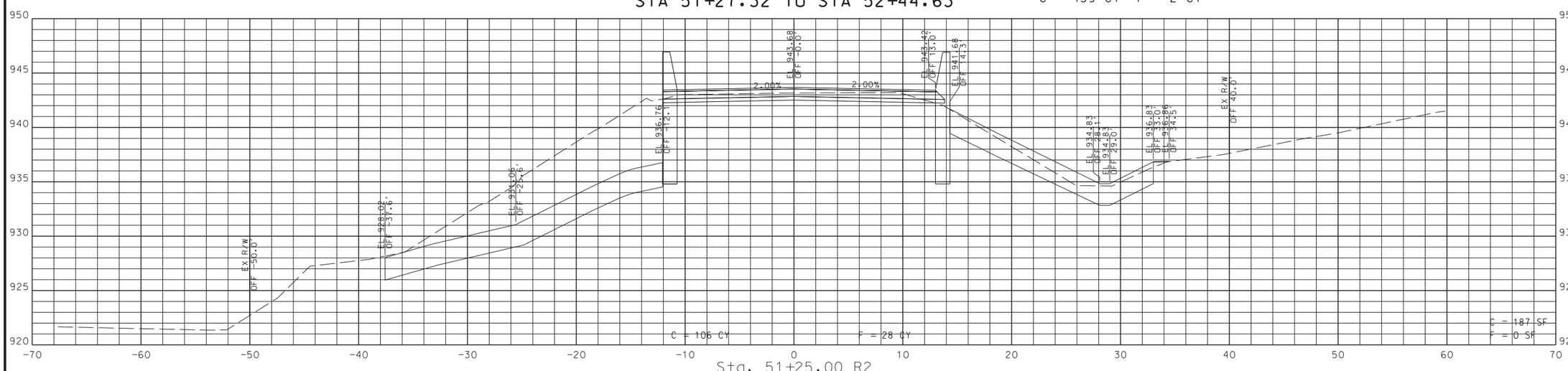

Sta. 51+25.00 R2

STA. 51+25.00 R2 TO STA. 52+75.00 R2

STATE OF MISSOURI
JASON MICHAEL SHAFER
NUMBER PE-2010019596
PROFESSIONAL ENGINEER
THIS SHEET HAS BEEN SEALED, SIGNED AND DATED ELECTRONICALLY.

DATE PREPARED	6/11/2020
ROUTE	123
STATE	MO
DISTRICT	SW
SHEET NO.	4
COUNTY	POLK
JOB NO.	J7S3205
CONTRACT ID.	
PROJECT NO.	
BRIDGE NO.	A8871

DATE	DESCRIPTION

IF A SEAL IS PRESENT ON THIS SHEET IT HAS BEEN ELECTRONICALLY SEALED AND DATED.

MISSOURI HIGHWAYS AND TRANSPORTATION COMMISSION

105 WEST CAPITOL
JEFFERSON CITY, MO 65102
1-888-ASK-MODOT (1-888-275-6636)

1411 East 104th St.
Kansas City, MO 64131
Tel (816) 874-4655
Fax (816) 874-4675
www.trekkdesigngroup.com

Missouri Cert. of Authority 2002010300

TREKK DESIGN GROUP, LLC

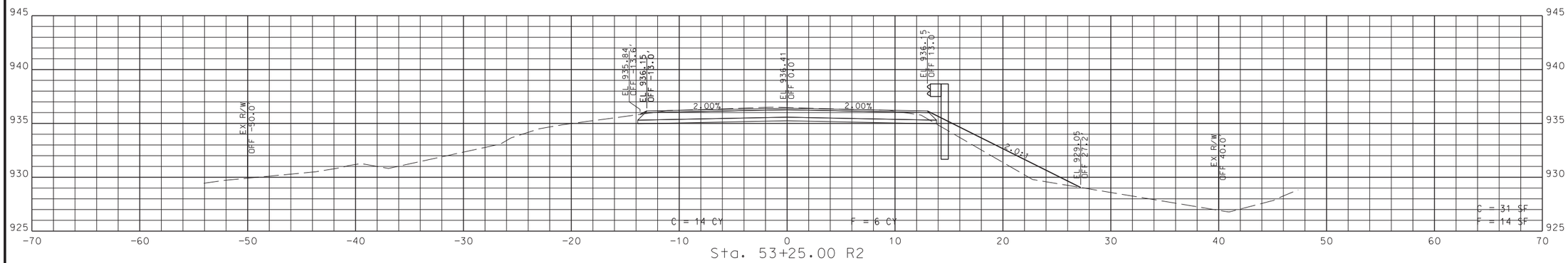

Sta. 53+25.00 R2

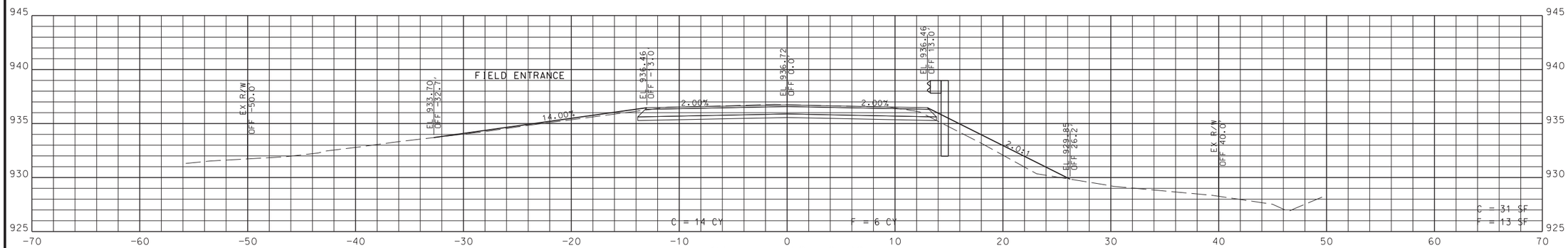

Sta. 53+12.76 R2

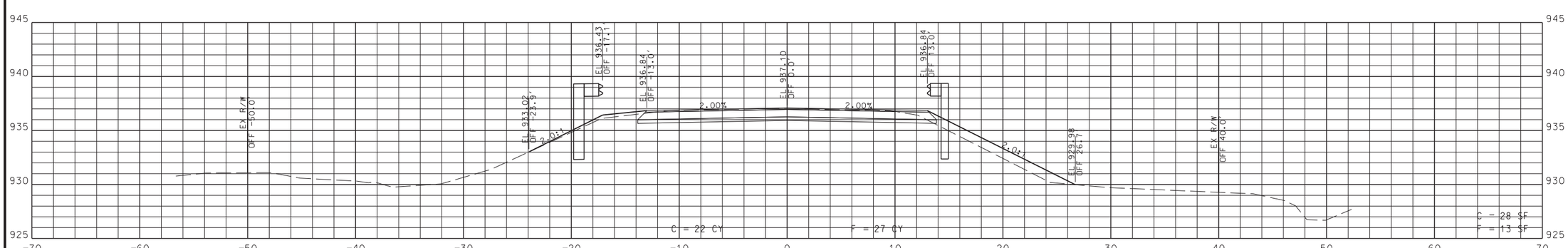

Sta. 53+00.00 R2

STA. 53+00.00 R2 TO STA. 53+25.00 R2

STATE OF MISSOURI
JASON MICHAEL SHAFER
NUMBER PE-2010019596
PROFESSIONAL ENGINEER

THIS SHEET HAS BEEN INSPECTED, SEALED AND DATED ELECTRONICALLY.

DATE PREPARED	6/11/2020
ROUTE	123
STATE	MO
DISTRICT	SW
SHEET NO.	5
COUNTY	POLK
JOB NO.	J7S3205
CONTRACT ID.	
PROJECT NO.	
BRIDGE NO.	A8871

DATE	DESCRIPTION

IF A SEAL IS PRESENT ON THIS SHEET IT HAS BEEN ELECTRONICALLY SEALED AND DATED.

MISSOURI HIGHWAYS AND TRANSPORTATION COMMISSION

105 WEST CAPITOL
JEFFERSON CITY, MO 65102
1-888-ASK-MODOT (1-888-275-6636)

TREKK DESIGN GROUP, LLC
5411 East 104th St.
Kansas City, MO 64137
Tel (816) 874-4851
Fax (816) 874-4855
www.trekkdesigngroup.com
Missouri Cert. of Authority 2002010300

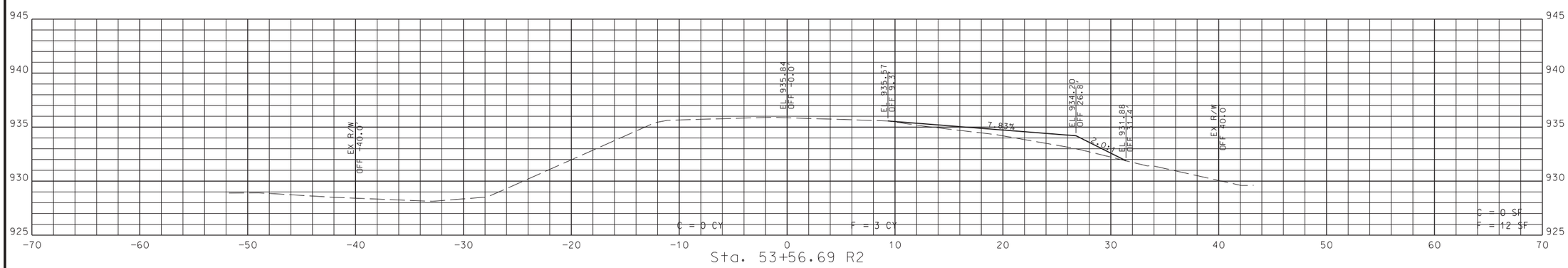

Sta. 53+56.69 R2

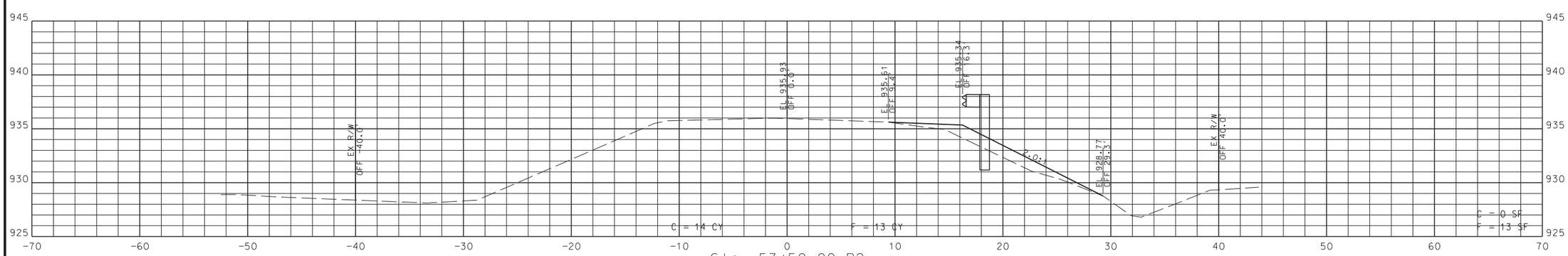

Sta. 53+50.00 R2

STA. 53+50.00 R2 TO STA. 53+56.69 R2

STATE OF MISSOURI
JASON MICHAEL SHAFER
NUMBER PE-2010019596
PROFESSIONAL ENGINEER

THIS SHEET HAS BEEN SIGNED, SEALED AND DATED ELECTRONICALLY.

DATE PREPARED	6/11/2020
ROUTE	123
STATE	MO
DISTRICT	SW
SHEET NO.	6
COUNTY	POLK
JOB NO.	J7S3205
CONTRACT ID.	
PROJECT NO.	
BRIDGE NO.	A8871

DATE	DESCRIPTION

IF A SEAL IS PRESENT ON THIS SHEET IT HAS BEEN ELECTRONICALLY SEALED AND DATED.

MISSOURI HIGHWAYS AND TRANSPORTATION COMMISSION

105 WEST CAPITOL
JEFFERSON CITY, MO 65102
1-888-ASK-MODOT (1-888-275-6636)

TREKK DESIGN GROUP, LLC
1411 East 104th St.
Kansas City, MO 64131
Tel (816) 874-4651
Fax (816) 874-4655
www.trekkdesigngroup.com

Missouri Cert. of Authority 2002010300