DESIGN DESIGNATION

A.A.D.T. - 2021 = 514
A.A.D.T. - 2041 = 568
D.H.V. = 7.51%
T = 12.25%
V = 55 M.P.H.
D (N/S) = 50.4%/ 49.6%
FUNCTIONAL CLASSIFICATION- MAJOR COLLECTOR

NO NEW RIGHT OF WAY

CONVENTIONAL SYMBOLS
(USED IN PLANS)

	EXISTING	NEW
BUILDINGS AND STRUCTURES		
GUARD RAIL		
GUARD CABLE		
CONCRETE RIGHT-OF-WAY MARKER		
STEEL RIGHT-OF-WAY MARKER		
LOCATION SURVEY MARKER		
UTILITIES		
FIBER OPTICS	-FO-	~~FO~~
OVERHEAD CABLE TV	-OTV-	~~OTV~~
UNDERGROUND CABLE TV	-UTV-	~~UTV~~
OVERHEAD TELEPHONE	-OT-	~~OT~~
UNDERGROUND TELEPHONE	-UT-	~~UT~~
OVERHEAD POWER	-OE-	~~OE~~
UNDERGROUND POWER	-UE-	~~UE~~
SANITARY SEWER	-S-	~~S~~
STORM SEWER	-SS-	~~SS~~
GAS	-G-	~~G~~
WATER	-W-	~~W~~
MANHOLE	SAN	
FIRE HYDRANT	HYD	
WATER VALVE	WV	
WATER METER	WM	
DROP INLET	DI	
DITCH BLOCK		
GROUND MOUNTED SIGN	SIGN	
LIGHT POLE		
H-FRAME POWER POLE		
TELEPHONE PEDESTAL	PED	
FENCE		
CHAIN LINK	-V-	
WOVEN WIRE	-X-	
GATE POST		
BENCHMARK	BM	

NOTE: DASHED OR OPEN SYMBOLS INDICATE EXISTING FEATURES

MISSOURI HIGHWAYS AND TRANSPORTATION COMMISSION
PLANS FOR PROPOSED
STATE HIGHWAY

POLK COUNTY

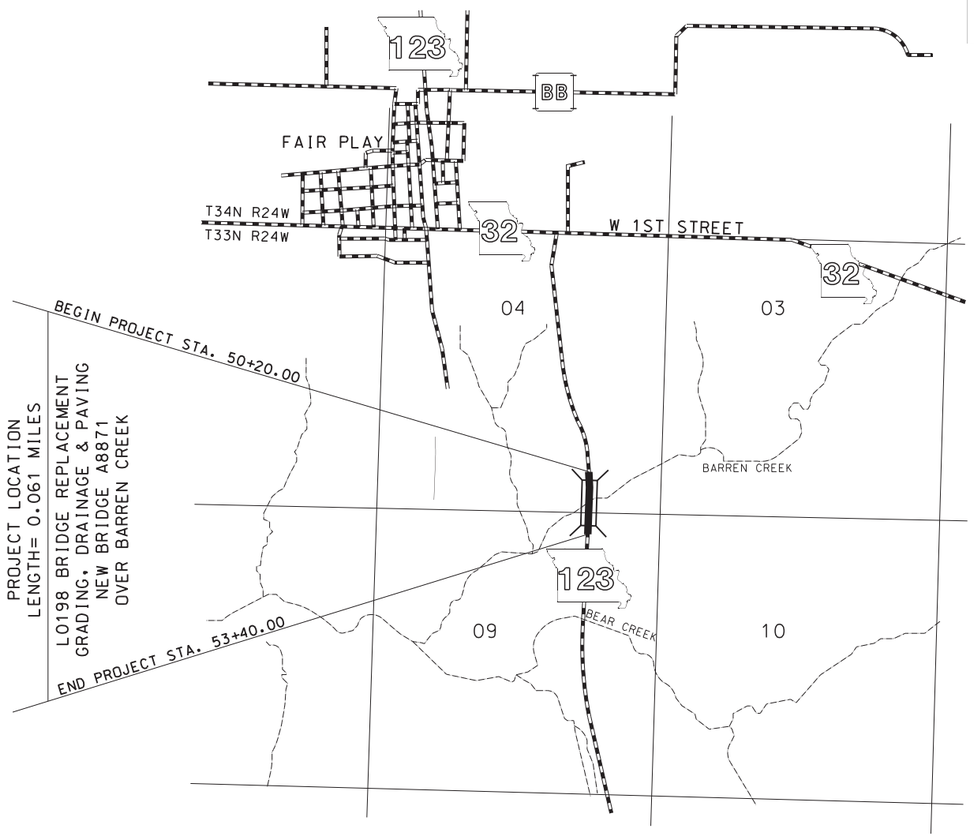

NOT TO SCALE

THE EXISTENCE AND APPROXIMATE LOCATION OF UTILITY FACILITIES KNOWN TO EXIST, AS SHOWN ON THE PLANS, ARE BASED ON THE BEST INFORMATION AVAILABLE TO THE COMMISSION AT THIS TIME. THIS INFORMATION IS PROVIDED BY THE COMMISSION "AS-IS" AND THE COMMISSION EXPRESSLY DISCLAIMS ANY REPRESENTATION OR WARRANTY AS TO THE COMPLETENESS, ACCURACY, OR SUITABILITY OF THE INFORMATION FOR ANY USE. RELIANCE UPON THIS INFORMATION IS DONE AT THE RISK AND PERIL OF THE USER, AND THE COMMISSION SHALL NOT BE LIABLE FOR ANY DAMAGES THAT MAY ARISE FROM ANY ERROR IN THE INFORMATION. IT IS, THEREFORE, THE RESPONSIBILITY OF THE CONTRACTOR TO VERIFY THE EXISTENCE, LOCATION AND STATUS OF ANY FACILITY. SUCH VERIFICATION INCLUDES DIRECT CONTACT WITH THE LISTED UTILITIES.

INDEX OF SHEETS

DESCRIPTION	SHEET NUMBER
TITLE SHEET	1
TYPICAL SECTIONS (TS) (1 SHEET)	2
QUANTITIES (QU) (3 SHEETS)	3
PLAN-PROFILE (PP)	4
REFERENCE (RP) & COORDINATE POINTS (CP)	5
TRAFFIC CONTROL SHEETS (TC)	6-7
EROSION CONTROL SHEETS (EC)	8
PAVEMENT MARKING (PM)	9
BRIDGE DRAWINGS (B)	
A8871	1-36
CROSS SECTIONS (XS)	1-6

LENGTH OF PROJECT

BEGINNING OF PROJECT	STA.	50+20.00
END OF PROJECT	STA.	53+40.00
APPARENT LENGTH		320.00 FEET

EQUATIONS AND EXCEPTIONS:

STA 51+12.40 BK = STA 51+11.70 AH + 0.70 FEET

TOTAL CORRECTIONS	+ 0.70	FEET
NET LENGTH OF PROJECT	320.70	FEET
STATE LENGTH	0.061	MILES

STATE OF MISSOURI
JASON MICHAEL SHAFER
NUMBER PE-2010019596
PROFESSIONAL ENGINEER
THE SEALED AND DATED DOCUMENT BELOW WAS SEALED AND DATED ELECTRONICALLY.

DATE PREPARED	8/3/2020
ROUTE 123	STATE MO
DISTRICT SW	SHEET NO. 1
COUNTY	POLK
JOB NO.	J7S3205
CONTRACT ID.	
PROJECT NO.	
BRIDGE NO.	A8871

DESCRIPTION	DATE

IF A SEAL IS PRESENT ON THIS SHEET IT HAS BEEN ELECTRONICALLY SEALED AND DATED.

MISSOURI HIGHWAYS AND TRANSPORTATION COMMISSION
105 WEST CAPITOL
JEFFERSON CITY, MO 65102
1-888-ASK-MODOT (1-888-275-6636)

TREKK DESIGN GROUP, LLC
1411 East 104th St.
Kansas City, MO 64131
Tel (816) 874-4655
Fax (816) 874-4675
www.trekkdesigngroup.com
Missouri Cert. of Authority 2002010300

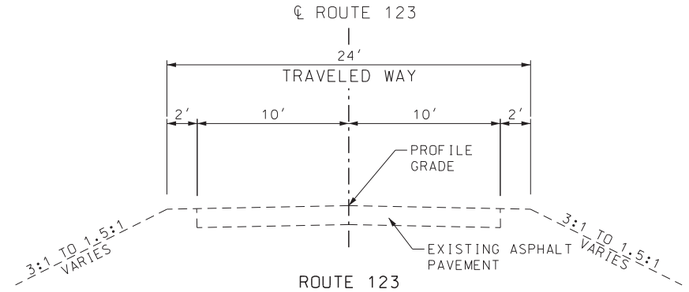

ROUTE 123
EXISTING TYPICAL SECTION

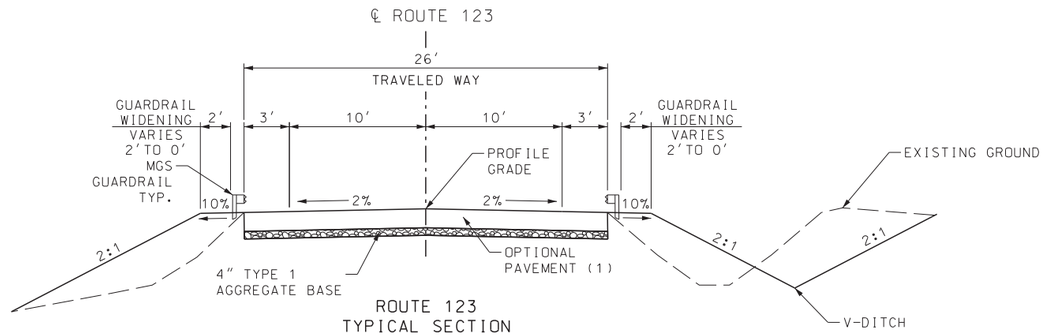

ROUTE 123
TYPICAL SECTION

STA. 50+20.00 TO STA. 51+08.57

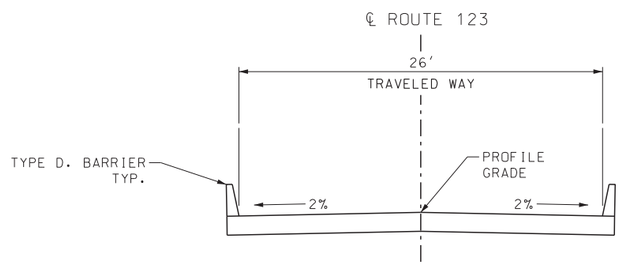

ROUTE 123
BRIDGE TYPICAL SECTION

STA. 51+08.57 TO STA. 51+27.87 (BRIDGE APPROACH SLAB)
STA. 51+27.32 TO STA. 52+45.18 (BRIDGE)
STA. 52+44.63 TO STA. 52+64.63 (BRIDGE APPROACH SLAB)

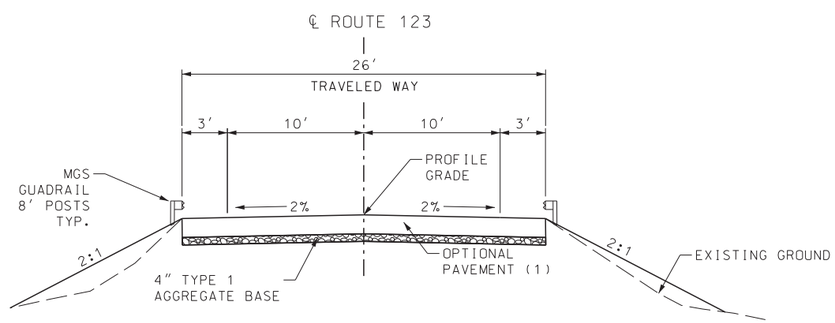

ROUTE 123
TYPICAL SECTION

STA. 52+64.63 TO STA. 53+40.00

OPTIONAL PAVEMENT (1)

OPTION A ASPHALT:
1.75" BIT. PAVEMENT MIXTURE
(BP-1) PG 64-22

8.25" BIT. PAVEMENT MIXTURE
(BB) PG 64-22

OPTION B CONCRETE:
8" JPCP WITH 15' JOINT SPACING
AND 1.25" DOWEL BARS

ESTIMATE FACTORS
(FOR INFORMATION ONLY)

BP-1 - 1.985 TONS/C.Y. AT 5.1% AC
BB - 1.985 TONS/C.Y. AT 4.7% AC
TACK COAT - 0.05 GAL/SY NEW ASPHALT

TYPICAL SECTION
SHEET 1 OF 1

STATE OF MISSOURI
JASON MICHAEL SHAFER
NUMBER PE-2010019596
PROFESSIONAL ENGINEER
THIS SHEET HAS BEEN SEALED AND DATED ELECTRONICALLY.

DATE PREPARED	6/11/2020
ROUTE	123
STATE	MO
DISTRICT	SW
SHEET NO.	2
COUNTY	POLK
JOB NO.	J7S3205
CONTRACT ID.	
PROJECT NO.	
BRIDGE NO.	A8871

DESCRIPTION

DATE

MISSOURI HIGHWAYS AND TRANSPORTATION COMMISSION

105 WEST CAPITOL
JEFFERSON CITY, MO 65102
1-888-ASK-MODOT (1-888-275-6636)

1411 East 104th St.
Kansas City, MO 64131
Tel (816) 874-4655
Fax (816) 874-4675
www.trekkdesigngroup.com

Missouri Cert. of Authority 2002010300

TREKK DESIGN GROUP, LLC

IF A SEAL IS PRESENT ON THIS SHEET IT HAS BEEN ELECTRONICALLY SEALED AND DATED.

CLEARING & GRUBBING

LOCATION	STATION	STATION	SIDE	CLEARING & GRUBBING (ACRES)	REMARKS
RTE 123	49+83	51+61	LT/RT	0.2	NORTH OF BRIDGE
RTE 123	52+13	53+57	LT/RT	0.1	SOUTH OF BRIDGE
			TOTAL	**1.0**	

REMOVAL OF IMPROVEMENTS

LOCATION	STATION	STATION	OFFSET (FT)	SIDE	DESCRIPTION	QUANTITY	UNITS	REMARKS
RTE 123	50+20		10	LT/RT	SAWCUT	20	LF	BEGIN PROJECT
RTE 123	53+40		10	LT/RT	SAWCUT	20	LF	END PROJECT
RTE 123	50+92		15	LT	OBJECT MARKER LEFT	1	EACH	
RTE 123	51+02		15	RT	OBJECT MARKER RIGHT	1	EACH	
RTE 123	51+11		14	LT	OBJECT MARKER LEFT	1	EACH	
RTE 123	51+19		14	RT	OBJECT MARKER RIGHT	1	EACH	
RTE 123	51+28		13	LT	OBJECT MARKER LEFT	1	EACH	
RTE 123	51+39		13	RT	OBJECT MARKER RIGHT	1	EACH	
RTE 123	52+35	52+82.0	39	RT	FENCE	48	LF	
RTE 123	52+37		12	LT	OBJECT MARKER LEFT	1	EACH	
RTE 123	52+47		13	RT	OBJECT MARKER RIGHT	1	EACH	
RTE 123	52+52		14	LT	OBJECT MARKER RIGHT	1	EACH	
RTE 123	52+62		14	RT	OBJECT MARKER LEFT	1	EACH	
RTE 123	52+71		15	LT	OBJECT MARKER RIGHT	1	EACH	
RTE 123	52+79		15	RT	OBJECT MARKER LEFT	1	EACH	
					TOTAL	**1 LUMP SUM**		

OPTIONAL PAVEMENT

LOCATION	STATION	STATION	WIDTH (FT)	OPTIONAL PAVEMENT (SY)	4" TYPE 1 BASE (SY)
RTE 123	50+20.00	51+08.57	26	255.9	255.9
RTE 123	52+64.63	53+40.00	26	217.7	217.7
		TOTAL		**473.6**	**474**

EARTHWORK

LOCATION	STATION	STATION	CLASS A EXCAVATION (CY)	COMPACTING EMBANKMENT (CY)	REMARKS
RTE 123	49+83.24	51+27.32	299	136	
RTE 123	51+27.32	51+60.57	208	0	SPILL SLOPE
RTE 123	52+12.95	52+44.63	215	2	SPILL SLOPE
RTE 123	52+44.63	53+56.69	170	76	
		TOTAL	**892**	**214**	

GUARDRAIL

LOCATION	STATION	STATION	SIDE	MASH TYPE A CRASHWORTHY END TERMINAL (EA)	MGS BRIDGE APPROACH TRANSITION SECTION (EA)	MGS GUARDRAIL 8 FT POSTS 6 FT-3 IN SPACING (LF)	MGS END ANCHOR (EA)	REMARKS
RTE 123	50+21	51+10	LT	1	1			
RTE 123	50+33	51+21	RT	1	1			
RTE 123	52+52	53+05	LT		1	25.0	1	17' ENTRANCE RADIUS
RTE 123	52+64	53+56	RT		1	62.5	1	17' ENTRANCE RADIUS
			TOTAL	**2**	**4**	**88**	**2**	

GRAVEL (A) OR CRUSHED STONE (B)

LOCATION	STATION	SIDE	TON	REMARKS
RTE 123	53+13	LT	16	EAST ENTRANCE
RTE 123	53+65	RT	14	WEST ENTRANCE
		TOTAL	**30**	

SUMMARY OF QUANTITIES
SHEET 1 OF 3

STATE OF MISSOURI
JASON MICHAEL SHAFER
NUMBER PE-2010019596
PROFESSIONAL ENGINEER
THIS SHEET HAS BEEN SEALED, SIGNED AND DATED ELECTRONICALLY.

DATE PREPARED 6/11/2020
ROUTE 123 | STATE MO
DISTRICT SW | SHEET NO. 3
COUNTY POLK
JOB NO. J7S3205
CONTRACT ID.
PROJECT NO.
BRIDGE NO. A8871

DESCRIPTION | DATE

MISSOURI HIGHWAYS AND TRANSPORTATION COMMISSION
105 WEST CAPITOL
JEFFERSON CITY, MO 65102
1-888-ASK-MODOT (1-888-275-6636)

1411 East 104th St.
Kansas City, MO 64131
Tel (816) 874-4655
Fax (816) 874-4675
www.trekkdesigngroup.com
Missouri Cert. of Authority 2002010300
TREKK DESIGN GROUP, LLC

PERMANENT EROSION CONTROL

LOCATION	STATION	STATION	SIDE	FURNISHING TYPE 3 ROCK DITCH LINER (CY)	PLACING TYPE 3 ROCK DITCH LINER (CY)	BEDDING MATERIAL FOR ROCK DITCH LINER (CY)	FURNISHING TYPE 2 ROCK BLANKET (CY)	PLACING TYPE 2 ROCK BLANKET (CY)	PERMANENT EROSION CONTROL GEOTEXTILE (SY)	SEEDING COOL SEASON MIXTURES (ACRE)	ADDITIONAL MOBILIZATION FOR SEEDING (EA)
RTE 123	49+83.24	51+13.93	LT/RT							0.2	1
RTE 123	50+53.77	51+13.93	RT	38	38	14			61		
RTE 123	51+02.51	51+56.51	LT/RT				218	218	327		
RTE 123	52+16.04	52+70.69	LT/RT				218	218	327		
RTE 123	52+58.57	53+56.49	LT							0.2	1
			TOTAL	**38**	**38**	**14**	**436**	**436**	**715**	**0.4**	**2**

MOBILIZATION
1 LUMP SUM

CONTRACTOR FURNISHED SURVEYING AND STAKING
1 LUMP SUM

PAVEMENT MARKING

LOCATION	STATION	STATION	SIDE	4 IN. WHITE STANDARD WATERBORNE PAVEMENT MARKING PAINT, TYPE P BEADS (LF)	4 IN. YELLOW STANDARD WATERBORNE PAVEMENT MARKING PAINT, TYPE P BEADS (LF)	REMARKS
RTE 123	50+20	53+40	LT	320		SOLID WHITE
RTE 123	50+20	53+40	LT/RT		80	INTERMITTENT YELLOW
RTE 123	50+20	53+40	LT/RT		320	SOLID YELLOW
RTE 123	50+20	53+40	RT	320		SOLID WHITE
			TOTAL	**640**	**400**	

TEMPORARY EROSION CONTROL

LOCATION	STATION	STATION	SIDE	SILT FENCE (LF)	ROCK DITCH CHECK (LF)	TYPE C BERM (LF)	SEDIMENT REMOVAL (CY)
RTE 123	49+81	51+03	LT	130			2
RTE 123	50+19		RT		10		1
RTE 123	50+52		RT		10		1
RTE 123	51+03	51+45	LT/RT			125	5
RTE 123	52+59	52+70	LT/RT			160	5
RTE 123	52+61		LT		10		1
RTE 123	52+71	53+56	RT	91			1
RTE 123	53+22	53+42	LT	29			1
			TOTAL	**250**	**30**	**285**	**17**

SUMMARY OF QUANTITIES
SHEET 2 OF 3

STATE OF MISSOURI
JASON MICHAEL SHAFER
NUMBER PE-2010019596
PROFESSIONAL ENGINEER
THIS SHEET HAS BEEN SEALED AND DATED ELECTRONICALLY.

DATE PREPARED 6/11/2020
ROUTE 123 | STATE MO
DISTRICT SW | SHEET NO. 3
COUNTY POLK
JOB NO. J7S3205
CONTRACT ID.
PROJECT NO.
BRIDGE NO. A8871

DESCRIPTION | DATE

MISSOURI HIGHWAYS AND TRANSPORTATION COMMISSION
105 WEST CAPITOL
JEFFERSON CITY, MO 65102
1-888-ASK-MODOT (1-888-275-6636)

TREKK DESIGN GROUP, LLC
1411 East 104th St.
Kansas City, MO 64131
Tel (816) 874-4651
Fax (816) 874-4675
www.trekkdesigngroup.com
Missouri Cert. of Authority 2002010300

EFFECTIVE: 10-01-2019

SIGN	SIZE IN.	AREA SQ.FT.	QTY EACH	TOTAL AREA SQ.FT.	QTY RELOC EACH	TOTAL RELOC SQ.FT.	SIGN NUM.	DESCRIPTION
WARNING SIGNS								
W01-1L	48X48	16.00						TURN (SYMBOL LEFT ARROW)
W01-1R	48X48	16.00						TURN (SYMBOL RIGHT ARROW)
W01-2L	48X48	16.00						CURVE (SYMBOL LEFT ARROW)
W01-2R	48X48	16.00						CURVE (SYMBOL RIGHT ARROW)
W01-3L	48X48	16.00						REVERSE TURN (SYMBOL LEFT ARROW)
W01-3R	48X48	16.00						REVERSE TURN (SYMBOL RIGHT ARROW)
W01-4L	48X48	16.00						REVERSE CURVE (SYMBOL LEFT ARROW)
W01-4R	48X48	16.00						REVERSE CURVE (SYMBOL RIGHT ARROW)
W01-4bL	48X48	16.00						DOUBLE ARROW REVERSE CURVE (SYMBOL LT ARROWS)
W01-4bR	48X48	16.00						DOUBLE ARROW REVERSE CURVE (SYMBOL RT ARROWS)
W01-4cL	48X48	16.00						TRIPLE ARROW REVERSE CURVE (SYMBOL LT ARROWS)
W01-4cR	48X48	16.00						TRIPLE ARROW REVERSE CURVE (SYMBOL RT ARROWS)
W01-6	60X30	12.50						HORIZONTAL ARROW (SYMBOL)
W01-6a	72X36	18.00						HORIZ. ARROW (SYMBOL ON PERMANENT BARRICADE)
W01-7	60X30	12.50						DOUBLE HEAD HORIZONTAL ARROW (SYMBOL)
W01-7a	72X36	18.00						DOUBLE HEAD HORIZ. ARROW (SYMBOL ON PERM. BARR.)
W01-8	18X24	3.00						CHEVRON (SYMBOL)
W01-8a	30X36	7.50						CHEVRON (SYMBOL FOR DIVIDED HIGHWAYS)
W03-1	48X48	16.00						STOP AHEAD (SYMBOL)
W03-2	48X48	16.00						YIELD AHEAD (SYMBOL)
W03-3	48X48	16.00						SIGNAL AHEAD (SYMBOL)
W03-4	48X48	16.00						BE PREPARED TO STOP
W03-5	48X48	16.00						SPEED LIMIT AHEAD
W04-1L	48X48	16.00						MERGE (SYMBOL FROM LEFT)
W04-1R	48X48	16.00						MERGE (SYMBOL FROM RIGHT)
W04-1aL	48X48	16.00						MERGE (ARROW SYMBOL)
W04-1aR	48X48	16.00						MERGE (ARROW SYMBOL)
W05-1	48X48	16.00						ROAD/BRIDGE/RAMP NARROWS
W05-3	48X48	16.00						ONE LANE BRIDGE
W05-5	48X48	16.00						NARROW LANES
W06-1	48X48	16.00						DIVIDED HIGHWAY (SYMBOL)
W06-2	48X48	16.00						DIVIDED HIGHWAY END (SYMBOL)
W06-3	48X48	16.00						TWO WAY TRAFFIC (SYMBOL)
W07-3a	30X24	5.00						NEXT XX MILES (PLAQUE)
W08-1	48X48	16.00						BUMP
W08-2	48X48	16.00						DIP
W08-3	48X48	16.00						PAVEMENT ENDS
W08-4	48X48	16.00						SOFT SHOULDER
W08-5	48X48	16.00						SLIPPERY WHEN WET (SYMBOL)
W08-6	48X48	16.00						TRUCK CROSSING
W08-6c	48X48	16.00						TRUCK ENTRANCE
W08-7	36X36	9.00						LOOSE GRAVEL
W08-7a	36X36	9.00						FRESH OIL/LOOSE GRAVEL
W08-9	48X48	16.00						LOW SHOULDER
W08-11	48X48	16.00						UNEVEN LANES
W08-12	48X48	16.00						NO CENTER LINE
W08-15	48X48	16.00						GROOVED PAVEMENT
W08-15P	30X24	5.00						MOTORCYCLE (PLAQUE)
W08-17	48X48	16.00						SHOULDER DROP-OFF (SYMBOL)
W08-17P	30X24	5.00						SHOULDER DROP-OFF (PLAQUE)
W10-1	42RND.	9.62						RAILROAD CROSSING
W012-1	24X24	4.00						DOUBLE DOWN ARROW (SYMBOL)
W012-2	48X48	16.00						LOW CLEARANCE (SYMBOL)
W012-2X	24X18	3.00						LOW CLEARANCE (PLAQUE)
W012-2a	84X24	14.00						OVERHEAD LOW CLEARANCE (FEET AND INCHES)
W012-4	120X60	50.00						LOW CLEARANCE XX FT XX IN XX MILES AHEAD
W012-5	120X60	50.00						WIDTH RESTRICTION XX FT XX IN XX MILES AHEAD
W013-1	30X30	6.25						ADVISORY SPEED (PLAQUE)
W016-2	30X24	5.00						XXX FEET (PLAQUE)
W016-3	30X24	5.00						X MILE (PLAQUE)
W020-1	48X48	16.00						ROAD/BRIDGE/RAMP WORK AHEAD
W020-2	48X48	16.00	5	80.00				DETOUR AHEAD
W020-3	48X48	16.00	2	32.00				ROAD CLOSED AHEAD
W020-3a	48X48	16.00	2	32.00				ROAD CLOSED 500 FT
W020-4	48X48	16.00						ONE LANE ROAD AHEAD
W020-5	48X48	16.00						RIGHT/CENTER/LEFT LANE CLOSED AHEAD
W020-5a	48X48	16.00						2 RIGHT/CENTER/LEFT LANES CLOSED AHEAD
W020-6a	48X48	16.00						RIGHT/CENTER/LEFT LANE CLOSED
W020-7a	48X48	16.00						FLAGGER (SYMBOL) WITH FLAGS
W021-2	36X36	9.00						FRESH OIL
W021-5	48X48	16.00						SHOULDER WORK AHEAD
W022-1	48X48	16.00						BLASTING ZONE AHEAD
W022-2	42X36	10.50						TURN OFF 2-WAY RADIO AND PHONE
W022-3	42X36	10.50						END BLASTING ZONE
G022-1	21X15	2.19						WET PAINT (ARROW PIVOTS)

SIGN	SIZE IN.	AREA SQ.FT.	QTY EACH	TOTAL SQ.FT.	QTY RELOC EACH	TOTAL RELOC SQ.FT.	SIGN NUM.	DESCRIPTION
GUIDE SIGNS								
E05-1	36X48	12.00						GORE EXIT
E05-2	48X36	12.00						EXIT OPEN
E05-2a	48X36	12.00						EXIT CLOSED
G020-1	60X24	10.00						ROAD WORK NEXT XX MILES
G020-2	48X24	8.00						END ROAD WORK
G020-4	36X18	4.50						PILOT CAR FOLLOW ME
G020-4a	42X30	8.75						PILOT CAR IN USE WAIT & FOLLOW
G020-4a	18X12	1.50						PILOT CAR IN USE WAIT & FOLLOW
G020-5aP	36X24	6.00						WORK ZONE (PLAQUE)
M04-8a	24X18	3.00	2	6.00				END DETOUR
M04-9L	48X36	12.00						DETOUR (LEFT ARROW)
M04-9R	48X36	12.00						DETOUR (RIGHT ARROW)
M04-9P	48X12	4.00						STREET NAME (PLAQUE)
M04-10L	48X18	6.00						DETOUR (ARROW LEFT)
M04-10R	48X18	6.00						DETOUR (ARROW RIGHT)
REGULATORY SIGNS								
R1-1	48X48	13.25						STOP
R1-2	48TRI.	6.93						YIELD
R1-2a	36X36	9.00						TO ONCOMING TRAFFIC (PLAQUE)
R1-3P	30X12	2.50						ALL WAY (PLAQUE)
R2-1	36X48	12.00						SPEED LIMIT XX
R3-1	48X48	16.00						NO RIGHT TURN (SYMBOL)
R3-2	48X48	16.00						NO LEFT TURN (SYMBOL)
R3-3	36X36	9.00						NO TURNS
R3-4	48X48	16.00						NO U-TURN (SYMBOL)
R3-7L	30X30	6.25						LEFT LANE MUST TURN LEFT
R3-7R	30X30	6.25						RIGHT LANE MUST TURN RIGHT
R4-1	36X48	12.00						DO NOT PASS
R4-2	36X48	12.00						PASS WITH CARE
R4-8a	36X48	12.00						KEEP LEFT (HORIZONTAL ARROW)
R4-7a	36X48	12.00						KEEP RIGHT (HORIZONTAL ARROW)
R5-1	30X30	6.25						DO NOT ENTER
R5-1a	36X24	6.00						WRONG WAY
R6-1L	54X18	6.75						ONE WAY ARROW (LEFT)
R6-1R	54X18	6.75						ONE WAY ARROW (RIGHT)
R6-2L	24X30	5.00						ONE WAY (LEFT)
R6-2R	24X30	5.00						ONE WAY (RIGHT)
R9-9	24X12	2.00						SIDEWALK CLOSED
R9-11L	24X18	3.00						SIDEWALK CLOSED AHEAD, (ARROW LEFT) CROSS HERE
R9-11R	24X18	3.00						SIDEWALK CLOSED AHEAD, (ARROW RIGHT) CROSS HERE
R10-6	24X36	6.00						STOP HERE ON RED (45° ARROW)
R11-2	48X30	10.00	2	20.00				ROAD CLOSED
R11-3a	60X30	12.50	3	37.50				ROAD CLOSED XX MILES AHEAD LOCAL TRAFFIC ONLY
R11-4	60X30	12.50						ROAD CLOSED TO THRU TRAFFIC
CONST-3A	60X48	20.00						FINE SIGN
CONST-3X	56X12	4.67						SPEEDING/PASSING (PLATE)
MISCELLANEOUS SIGNS								
CONST-5	48X36	12.00						POINT OF PRESENCE
CONST-5	96X48	32.00	2	64.00	2	64.00		POINT OF PRESENCE
CONST-7	48X24	8.00						RATE OUR WORK ZONE
CONST-7	72X36	18.00						RATE OUR WORK ZONE
CONST-8	48X36	12.00						WORK ZONE NO PHONE ZONE
SP-50	36X78	19.50	37	721.50				DETOUR ASSEMBLY

	TOTAL
616-10.05 CONSTRUCTION SIGNS	993
616-10.10 RELOCATED SIGNS	64

ITEM NUMBER	TOTAL QTY	DESCRIPTION
6122008		IMPACT ATTENUATOR 40 MPH (SAND BARRELS)
6122009		IMPACT ATTENUATOR 45 MPH (SAND BARRELS)
6122010		IMPACT ATTENUATOR 50 MPH (SAND BARRELS)
6122012		IMPACT ATTENUATOR 55 MPH (SAND BARRELS)
6122014		IMPACT ATTENUATOR 60 MPH (SAND BARRELS)
6122017		IMPACT ATTENUATOR 65 MPH (SAND BARRELS)
6122019		IMPACT ATTENUATOR 70 MPH (SAND BARRELS)
6122020		REPLACEMENT SAND BARREL
6122030		IMPACT ATTENUATOR (RELOCATION)
6123000A		TRUCK OR TRAILER MOUNTED ATTENUATOR (TMA)
6161007		SPEED LIMIT AND STROBE LIGHT ASSEMBLY
6161008	2	ADVANCED WARNING RAIL SYSTEM
6161009	4	FLAG ASSEMBLY
6161012		BUOYS (BOATS KEEP OUT)
6161013		BUOYS (NO WAKE)
6161014		SPECIAL SIGN ASSEMBLY (BOATS KEEP OUT)
6161024		CHANNELIZER (TRIM LINE) WITH LIGHT
6161025		CHANNELIZER (TRIM LINE)
6161030		TYPE III MOVEABLE BARRICADE
6161031	12	TYPE III MOVEABLE BARRICADE WITH LIGHTS
6161033		DIRECTION INDICATOR BARRICADE
6161034		DIRECTION INDICATOR BARRICADE, WITH LIGHT
6161040		FLASHING ARROW PANEL
6161047		TYPE III OBJECT MARKER
6161052		WARNING LIGHT, TYPE B
6161055		SEQUENTIAL FLASHING WARNING LIGHT
6161070		TUBULAR MARKER
6161095		RADAR SPEED ADVISORY SYSTEM
6161096		CHANGEABLE MESSAGE SIGN, COMMISSION FURNISHED/RETAINED
6161098A	2	CHANGEABLE MESSAGE SIGN W/O COMM. INTERFACE, CONTRACTOR FURNISHED/RETAINED
6161099		CHANGEABLE MESSAGE SIGN WITH COMM. INTERFACE, CONTRACTOR FURNISHED/RETAINED
6162000A		WORK ZONE TRAFFIC SIGNAL SYSTEM
6162002		TEMPORARY LONG-TERM RUMBLE STRIPS
6162004		TEMPORARY SHORT-TERM RUMBLE STRIPS
6173600D		TEMPORARY TRAFFIC BARRIER CONTRACTOR FURNISHED/RETAINED
6173602B		TEMPORARY TRAFFIC BARRIER CONTRACTOR FURNISHED/COMMISSION RETAINED
6174000A		TEMP. TRAFFIC BARRIER HEIGHT TRANSITION
6175010A		RELOCATING TEMPORARY TRAFFIC BARRIER
6176000B		TEMPORARY TRAFFIC BARRIER COMMISSION FURNISHED/RETAINED
6177000B		TEMP. TRAFFIC BARRIER HEIGHT TRANSITION COMMISSION FURNISHED/RETAINED
6208064A		TEMPORARY RAISED PAVEMENT MARKER
9029400		TEMPORARY TRAFFIC SIGNALS
9029401		TEMPORARY TRAFFIC SIGNALS AND LIGHTING

SUMMARY OF QUANTITIES
SHEET 3 OF 3

STATE OF MISSOURI
JASON MICHAEL SHAFER
NUMBER PE-2010019596
PROFESSIONAL ENGINEER
THIS SHEET HAS BEEN DIGITALLY SEALED AND DATED ELECTRONICALLY.

DATE PREPARED 6/11/2020

ROUTE	STATE
123	MO
DISTRICT	SHEET NO.
SW	3

COUNTY POLK
JOB NO. J7S3205
CONTRACT ID.
PROJECT NO.
BRIDGE NO. A8871

DESCRIPTION | DATE

MISSOURI HIGHWAYS AND TRANSPORTATION COMMISSION
105 WEST CAPITOL
JEFFERSON CITY, MO 65102
1-888-ASK-MODOT (1-888-275-6636)

1411 East 104th St.
Kansas City, MO 64131
Tel (816) 874-4655
Fax (816) 874-4675
www.trekkdesigngroup.com
Missouri Cert. of Authority 2002010300
TREKK DESIGN GROUP, LLC

GENERAL NOTES:

1. ANY WORK INDICATED ON THE PLANS THAT EXTENDS BEYOND THE PROJECT LIMITS IS CONSIDERED INCIDENTAL TO AND A PART OF THE CONSTRUCTION OF THIS PROJECT.
2. SEE EROSION CONTROL SHEET FOR PERMANENT ROCK BLANKET CALLS AND DETAILS.
3. ALL BEARINGS BASED ON STATE PLANE BEARINGS, WESTERN ZONE.

CURVE RTE123_3
PI 49+18.40
PC 48+08.45
PT 50+28.02
Δ 7° 41' 00.0" (RT)
D 3° 29' 57.9"
L 219.56'
T 109.95'
R 1,637.30'

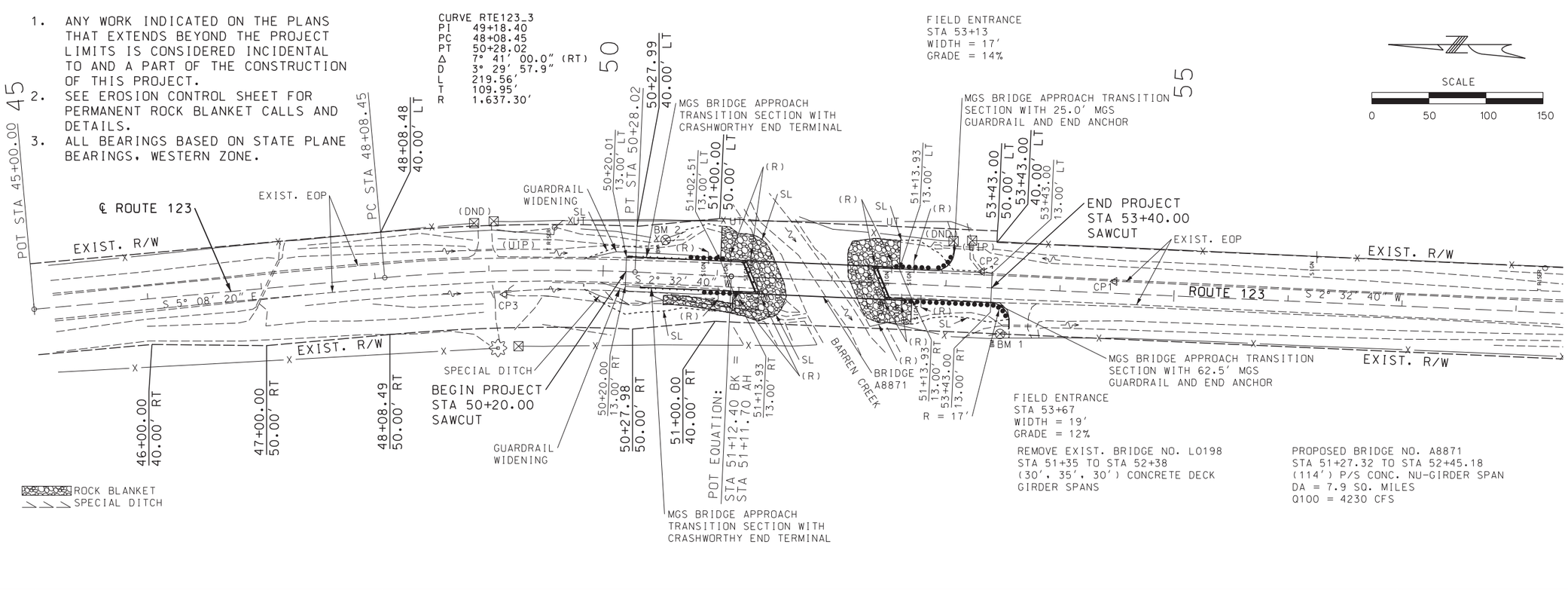

REMOVE EXIST. BRIDGE NO. L0198
STA 51+35 TO STA 52+38
(30', 35', 30') CONCRETE DECK GIRDER SPANS

PROPOSED BRIDGE NO. A8871
STA 51+27.32 TO STA 52+45.18
(114') P/S CONC. NU-GIRDER SPAN
DA = 7.9 SQ. MILES
Q100 = 4230 CFS

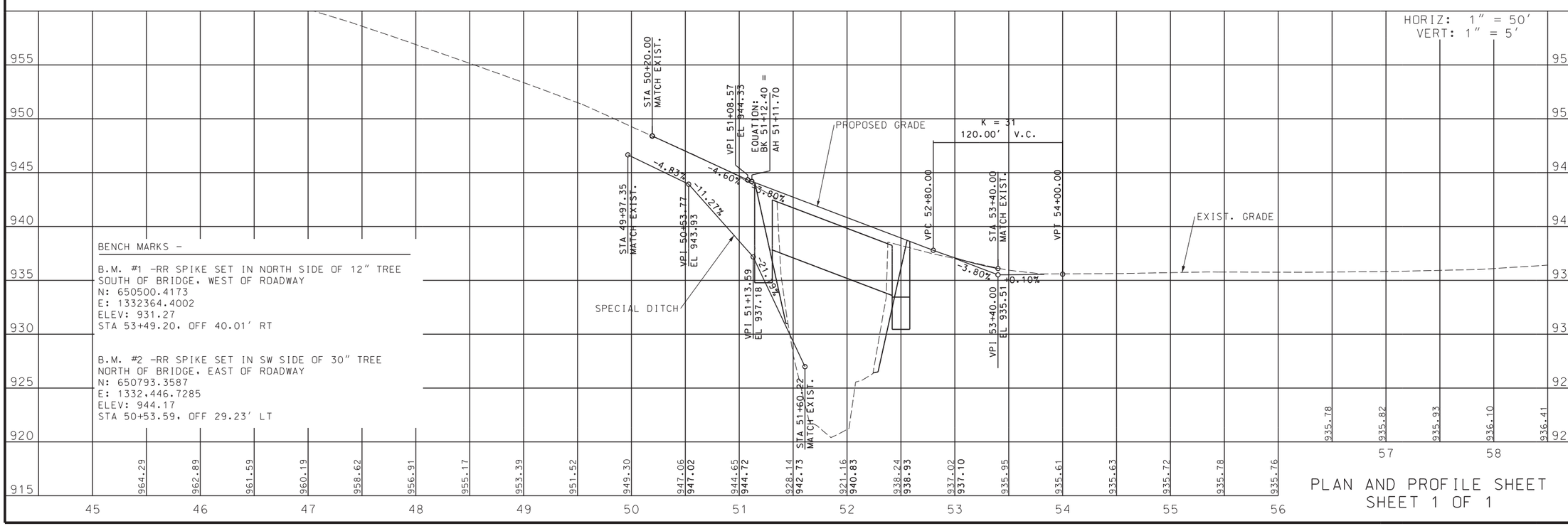

BENCH MARKS -

B.M. #1 -RR SPIKE SET IN NORTH SIDE OF 12" TREE SOUTH OF BRIDGE, WEST OF ROADWAY
N: 650500.4173
E: 1332364.4002
ELEV: 931.27
STA 53+49.20, OFF 40.01' RT

B.M. #2 -RR SPIKE SET IN SW SIDE OF 30" TREE NORTH OF BRIDGE, EAST OF ROADWAY
N: 650793.3587
E: 1332,446.7285
ELEV: 944.17
STA 50+53.59, OFF 29.23' LT

PLAN AND PROFILE SHEET
SHEET 1 OF 1

STATE OF MISSOURI
JASON MICHAEL SHAFER
NUMBER PE-2010019596
PROFESSIONAL ENGINEER
THIS SHEET HAS BEEN SIGNED, SEALED AND DATED ELECTRONICALLY.

DATE PREPARED	6/11/2020
ROUTE 123	STATE MO
DISTRICT SW	SHEET NO. 4
COUNTY POLK	
JOB NO. J7S3205	
CONTRACT ID.	
PROJECT NO.	
BRIDGE NO. A8871	

DESCRIPTION

DATE

IF A SEAL IS PRESENT ON THIS SHEET IT HAS BEEN ELECTRONICALLY SEALED AND DATED.

MISSOURI HIGHWAYS AND TRANSPORTATION COMMISSION
105 WEST CAPITOL
JEFFERSON CITY, MO 65102
1-888-ASK-MODOT (1-888-275-6636)

1411 East 104th St.
Kansas City, MO 64131
Tel (816) 874-4655
Fax (816) 874-4675
www.trekkdesigngroup.com
Missouri Cert. of Authority 2002010300
TREKK DESIGN GROUP, LLC

STATE PLANE COORDINATES

MODOT RTN 2011 ADJ 2010 EPOCH
GEOID 2012A
PROJECTION FACTOR 1.00000000

COORDINATE POINT LISTING - MISSOURI COORDINATE SYSTEM OF 1983

SHEET NO	STATION	LOCATION	* OFFSET (FEET)	STATE PLANE NORTHING (FEET)	STATE PLANE EASTING (FEET)	STATE PLANE ELEVATION	STATE PLANE ZONE	DESCRIPTION	GPK POINT ID	VERTICAL	GEOID MODEL
CONTROL POINTS											
4	54+47.44	ROUTE 123	10.37′ LT	650400.0333	1332410.3694	935.47	CENTRAL	CP1- PK NAIL IN E SIDE OF PVMT S OF BRIDGE			
4	53+31.16	ROUTE 123	13.86′ LT	650516.0433	1332419.0206	935.59	CENTRAL	CP2- 5/8″ REBAR W/ PLASTIC CAP			
4	49+13.00	ROUTE 123	20.77′ RT	650934.6536	1332398.9649	953.16	CENTRAL	CP3- 5/8″ REBAR W/ PLASTIC CAP			
ALIGNMENT											
4	50+20.00	ROUTE 123	0.00′	650828.2079	1332418.9958	948.40	CENTRAL	BEGIN PROJECT			
4	48+08.45	ROUTE 123	0.00′	651039.5438	1332413.6927	956.62	CENTRAL	PC			
4	49+18.40	ROUTE 123		650930.0404	1332423.5406		CENTRAL	PI			
4		ROUTE 123		650892.8888	1330782.9739		CENTRAL	CC			
4	50+28.02	ROUTE 123	0.00′	650820.2034	1332418.6598	948.04	CENTRAL	PT			
4	51+12.40	ROUTE 123	0.00′	650735.9023	1332414.9137	943.93	CENTRAL	POT EQUATION BACK			
4	51+11.70	ROUTE 123	0.00′	650735.9023	1332414.9137	943.93	CENTRAL	POT EQUATION AHEAD			
4	53+40.00	ROUTE 123	0.00′	650507.8324	1332404.7789	936.14	CENTRAL	END PROJECT			

* GROUND DISTANCE

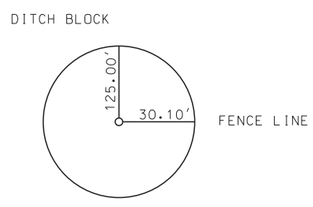

CONTROL POINT 1
PK NAIL IN EAST SIDE OF PAVEMENT
SOUTH OF BRIDGE
COORDINATES
NORTHING = 650,400.0333
EASTING = 1,332,410.3694
ELEVATION = 935.47
(APPROXIMATE STATION 54+47.44
APPROXIMATE OFFSET 10.37′ LEFT)

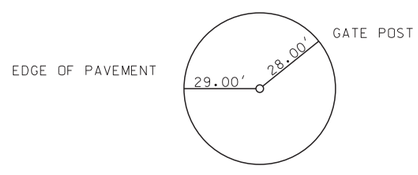

CONTROL POINT 2
5/8″ REBAR W/ PLASTIC CAP IN FIELD ENTRANCE
SOUTH OF BRIDGE EAST OF ROADWAY
COORDINATES
NORTHING = 650,516.0433
EASTING = 1,332,419.0206
ELEVATION = 935.59
(APPROXIMATE STATION 53+31.16
APPROXIMATE OFFSET 13.86′ LEFT)

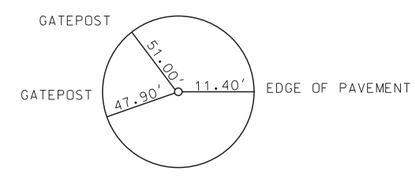

CONTROL POINT 3
5/8″ REBAR W/ PLASTIC CAP SET IN FIELD ENTRANCE
NORTH OF BRIDGE WEST OF ROADWAY
COORDINATES
NORTHING = 650,934.6536
EASTING = 1,332,398.9649
ELEVATION = 953.16
(APPROXIMATE STATION 49+13.00
APPROXIMATE OFFSET 20.77′ RIGHT)

REFERENCE POINTS
AND
COORDINATE POINTS
SHEET 1 OF 1

STATE OF MISSOURI
JASON MICHAEL SHAFER
NUMBER PE-2010019596
PROFESSIONAL ENGINEER
THIS SHEET HAS BEEN SEALED AND DATED ELECTRONICALLY.

DATE PREPARED 6/11/2020
ROUTE 123 | STATE MO
DISTRICT SW | SHEET NO. 5
COUNTY POLK
JOB NO. J7S3205
CONTRACT ID.
PROJECT NO.
BRIDGE NO. A8871

DESCRIPTION | DATE

IF A SEAL IS PRESENT ON THIS SHEET IT HAS BEEN ELECTRONICALLY SEALED AND DATED.

MISSOURI HIGHWAYS AND TRANSPORTATION COMMISSION
105 WEST CAPITOL
JEFFERSON CITY, MO 65102
1-888-ASK-MODOT (1-888-275-6636)

1411 East 104th St.
Kansas City, MO 64131
Tel (816) 874-4655
Fax (816) 874-4675
www.trekdesigngroup.com
Missouri Cert. of Authority 2002010300
TREKK DESIGN GROUP, LLC

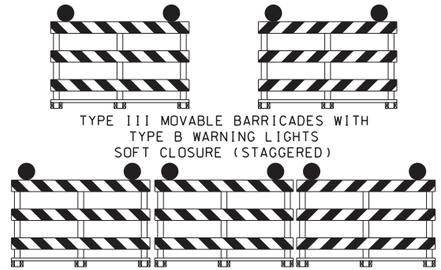

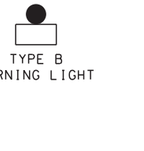

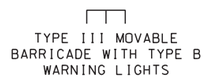

Focus on Bridges
MoDOT **Fall 2021**

96 IN X 48 IN
60

Completed as Promised
42 IN X 8 IN
60A

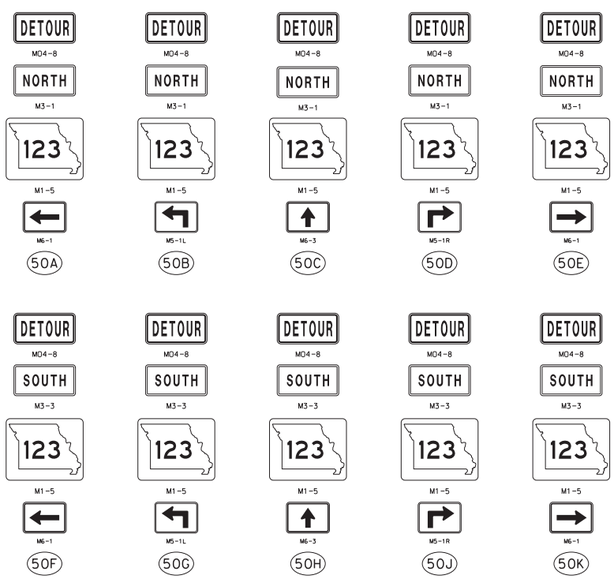

NOTE: SIGN 60 PLACED BEFORE SOFT CLOSURES DURING CONSTRUCTION

SIGN 60 & 60A PLACED AS SHOWN AFTER CONSTRUCTION

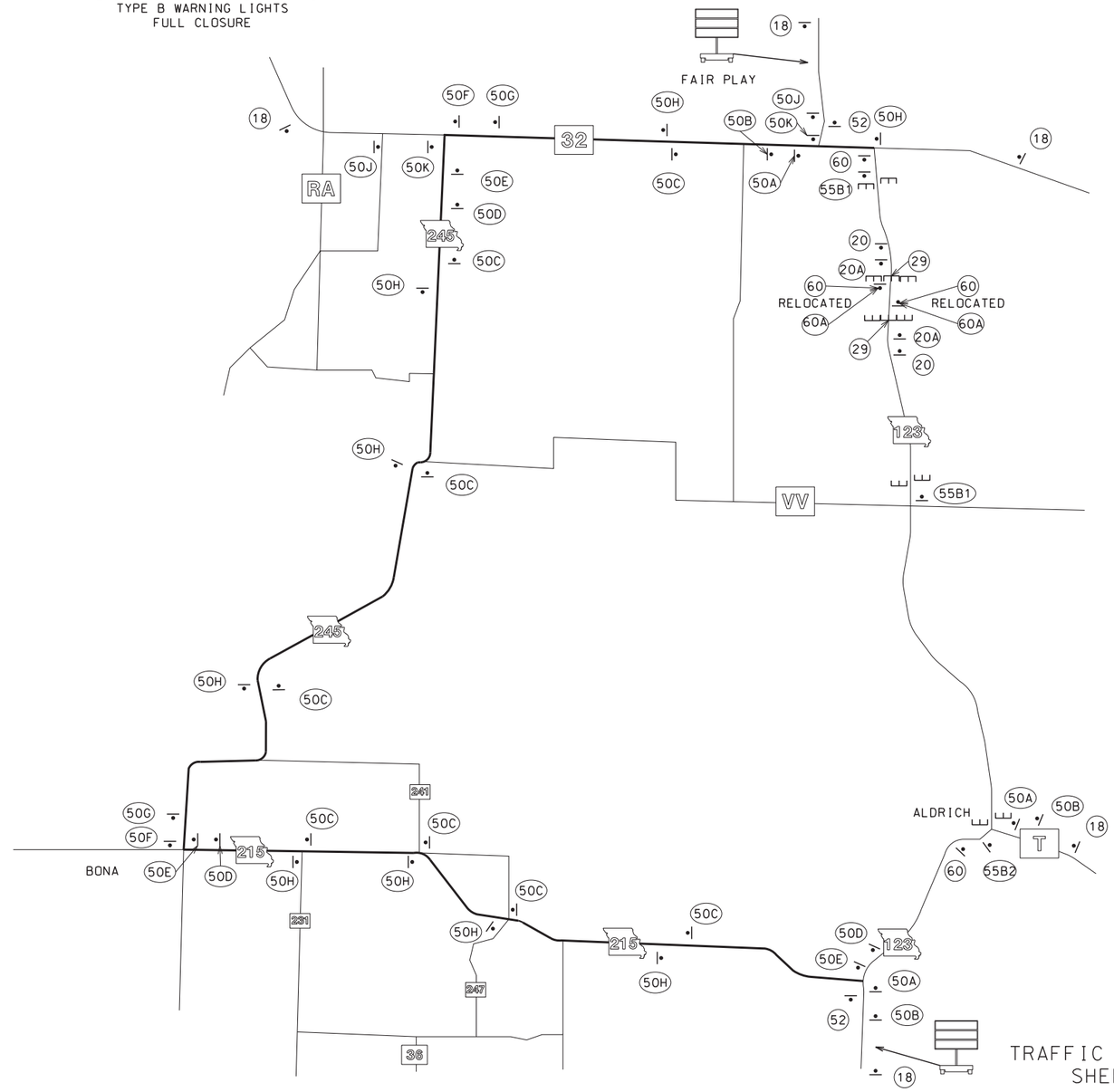

NOT TO SCALE

TRAFFIC CONTROL SHEET
SHEET 1 OF 2

STATE OF MISSOURI
JASON MICHAEL SHAFER
NUMBER PE-2010019596
PROFESSIONAL ENGINEER
THIS SHEET HAS BEEN SEALED AND DATED ELECTRONICALLY.

DATE PREPARED	6/11/2020
ROUTE 123	STATE MO
DISTRICT SW	SHEET NO. 6
COUNTY	POLK
JOB NO.	J7S3205
CONTRACT ID.	
PROJECT NO.	
BRIDGE NO.	A8871

DESCRIPTION

DATE

MISSOURI HIGHWAYS AND TRANSPORTATION COMMISSION
105 WEST CAPITOL
JEFFERSON CITY, MO 65102
1-888-ASK-MODOT (1-888-275-6636)

1411 East 19th St.
Kansas City, MO 64127
Tel. (816) 874-4655
Fax. (816) 874-4675
www.trekkdesigngroup.com
Missouri Cert. of Authority 2002010300
TREKK DESIGN GROUP, LLC

IF A SEAL IS PRESENT ON THIS SHEET IT HAS BEEN ELECTRONICALLY SEALED AND DATED.

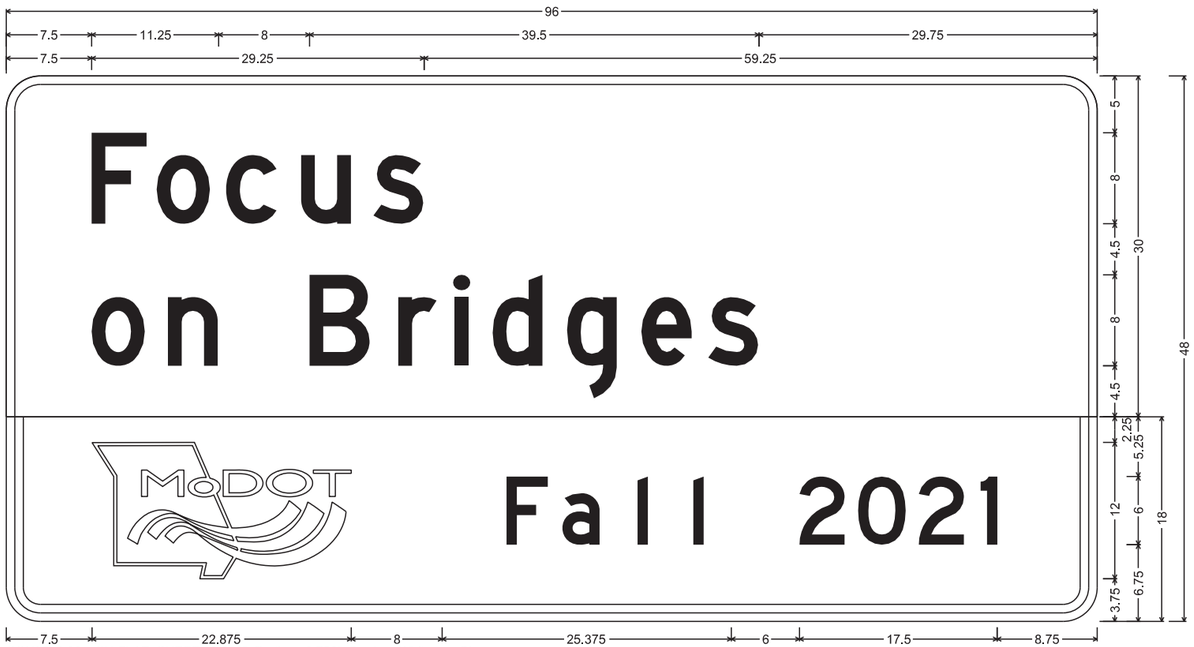

CONST-5-96 SH-FLAT SHEET; 3.000" Radius, 0.750" Border, White on Blue;
[Focus] D; [on Bridges] D; [ ] Black E;
3.000" Radius, 0.750" Border, 0.750" Indent, Blue on White;
[Spring 2021] D;
Table of letter and object lefts.

F 7.500	o 13.250	c 19.375	u 26.000	s 32.375						
o 7.500	n 14.250	B 26.750	r 34.500	i 39.500	d 42.750	g 49.375	e 55.875	s 61.750		
☛ 7.500	S 38.375	p 44.000	r 48.875	i 52.625	n 55.500	g 60.500	2 69.750	0 75.000	2 80.250	1 85.750

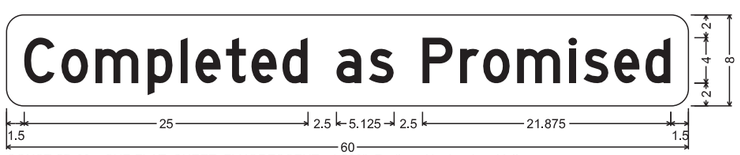

CONST-5P-60 SHF-FLAT SHEET FLUORESCENT; 1.500" Radius, No border, Yellow;
[Completed as Promised] Black D 65% spacing;
Table of letter and object lefts.

C 1.500	o 4.875	m 7.875	p 12.375	l 15.375	e 16.625	t 19.375	e 21.500	d 24.250	a 29.000	s 31.875
P 36.625	r 39.875	o 41.875	m 44.875	i 49.500	s 50.750	e 53.500	d 56.250			

TRAFFIC CONTROL SHEET
SHEET 2 OF 2

STATE OF MISSOURI
JASON MICHAEL SHAFER
NUMBER PE-2010019596
PROFESSIONAL ENGINEER
THIS SHEET HAS BEEN SIGNED, SEALED AND DATED ELECTRONICALLY.

DATE PREPARED 6/11/2020	
ROUTE 123	STATE MO
DISTRICT SW	SHEET NO. 7
COUNTY POLK	
JOB NO. J7S3205	
CONTRACT ID.	
PROJECT NO.	
BRIDGE NO. A8871	

DATE	DESCRIPTION

MISSOURI HIGHWAYS AND TRANSPORTATION COMMISSION
105 WEST CAPITOL
JEFFERSON CITY, MO 65102
1-888-ASK-MODOT (1-888-275-6636)

TREKK DESIGN GROUP, LLC
1411 East 104th St.
Kansas City, MO 64131
Tel (816) 874-4655
Fax (816) 874-4675
www.trekkdesigngroup.com
Missouri Cert. of Authority 2002010300

IF A SEAL IS PRESENT ON THIS SHEET IT HAS BEEN ELECTRONICALLY SEALED AND DATED.

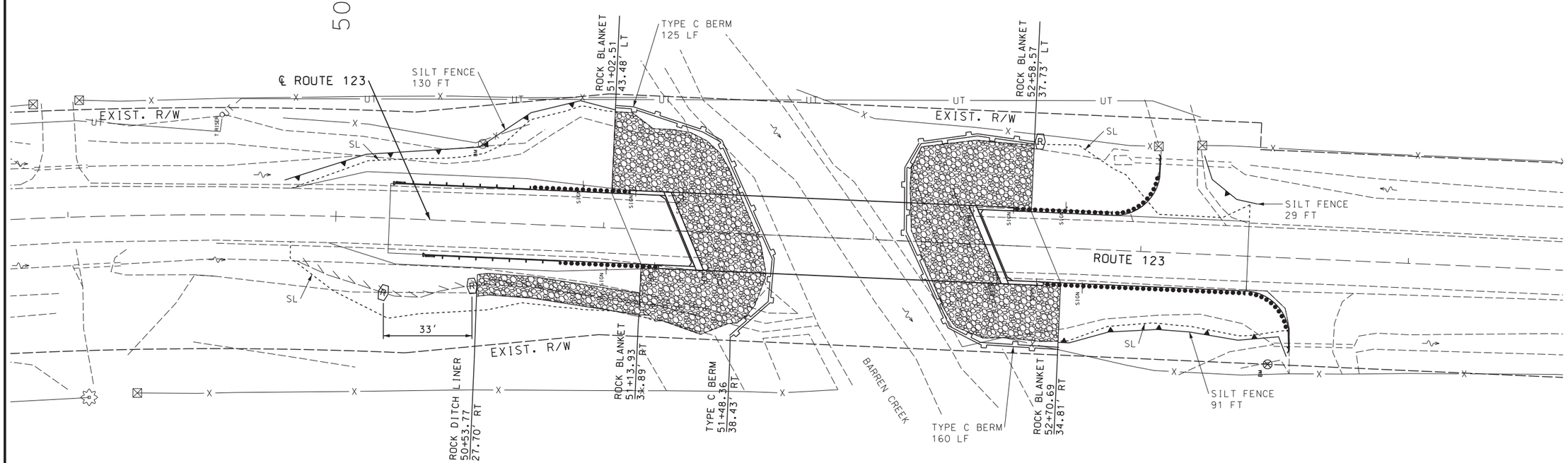

STA. 50+53.77 TO 51+13.93
INSTALL 38 CY TYPE 3 ROCK DITCH LINER,
61 SY PERMANENT EROSION CONTROL GEOTEXTILE &
14 CY BEDDING MATERIAL

STA. 51+02.51 TO 51+56.51
INSTALL 218 CY TYPE 2 ROCK BLANKET &
327 SY PERMANENT EROSION CONTROL GEOTEXTILE

STA. 52+16.04 TO 52+70.69
INSTALL 218 CY TYPE 2 ROCK BLANKET &
327 SY PERMANENT EROSION CONTROL GEOTEXTILE

TEMPORARY EROSION CONTROL LEGEND

- ROCK DITCH CHECK
- TEMPORARY BERM TYPE C
- SILT FENCE
- SPECIAL DITCH
- TYPE 2 ROCK BLANKET

SCALE

0 20 40 60

EROSION CONTROL SHEET
SHEET 1 OF 1

STATE OF MISSOURI
JASON MICHAEL SHAFER
NUMBER PE-2010019596
PROFESSIONAL ENGINEER

THIS SHEET HAS BEEN DIGITALLY SEALED AND DATED ELECTRONICALLY.

DATE PREPARED	6/11/2020
ROUTE	123
STATE	MO
DISTRICT	SW
SHEET NO.	8
COUNTY	POLK
JOB NO.	J7S3205
CONTRACT ID.	
PROJECT NO.	
BRIDGE NO.	A8871

DESCRIPTION

DATE

IF A SEAL IS PRESENT ON THIS SHEET IT HAS BEEN ELECTRONICALLY SEALED AND DATED.

MISSOURI HIGHWAYS AND TRANSPORTATION COMMISSION

105 WEST CAPITOL
JEFFERSON CITY, MO 65102
1-888-ASK-MODOT (1-888-275-6636)

1411 East 104th St.
Kansas City, MO 64131
Tel (816) 874-4655
Fax (816) 874-4675
www.trekkdesigngroup.com

Missouri Cert. of Authority 2002010300

TREKK DESIGN GROUP, LLC

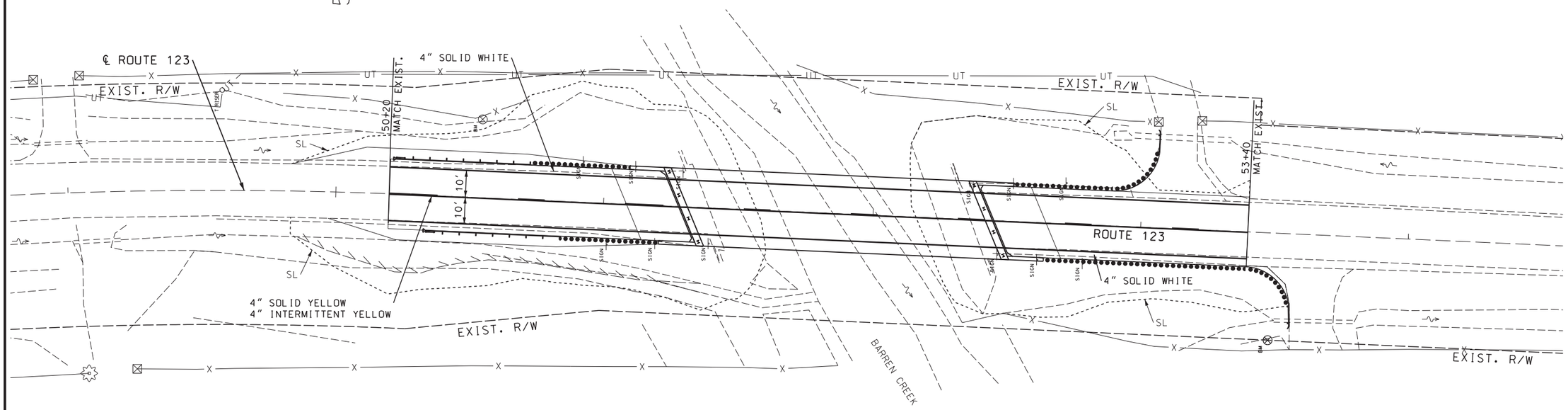

SCALE

0 20 40 60

PAVEMENT MARKINGS SHEET
SHEET 1 OF 1

STATE OF MISSOURI
JASON MICHAEL SHAFER
NUMBER PE-2010019596
PROFESSIONAL ENGINEER

THIS SHEET HAS BEEN ORIGINALLY SEALED AND DATED ELECTRONICALLY.

DATE PREPARED	6/11/2020
ROUTE	123
STATE	MO
DISTRICT	SW
SHEET NO.	9
COUNTY	POLK
JOB NO.	J7S3205
CONTRACT ID.	
PROJECT NO.	
BRIDGE NO.	A8871

DESCRIPTION

DATE

MISSOURI HIGHWAYS AND TRANSPORTATION COMMISSION

105 WEST CAPITOL
JEFFERSON CITY, MO 65102
1-888-ASK-MODOT (1-888-275-6636)

1411 East 104th St.
Kansas City, MO 64131
Tel (816) 874-4655
Fax (816) 874-4675
www.trekkdesigngroup.com

Missouri Cert. of Authority 2002010300

TREKK DESIGN GROUP, LLC

IF A SEAL IS PRESENT ON THIS SHEET IT HAS BEEN ELECTRONICALLY SEALED AND DATED.

SEC/SUR 4 TWP 33N RGE 24W

(114′) PRESTRESSED CONCRETE NU-GIRDER SPAN

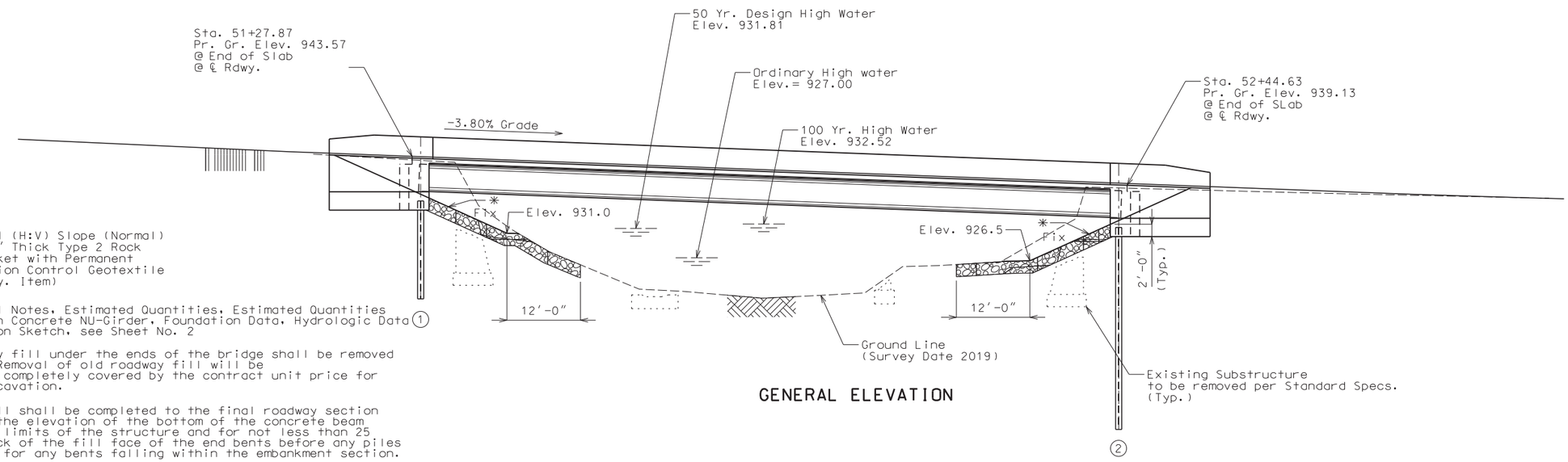

✳ 2:1 (H:V) Slope (Normal) 2′-0″ Thick Type 2 Rock Blanket with Permanent Erosion Control Geotextile (Rdwy. Item)

For General Notes, Estimated Quantities, Estimated Quantities for Slab on Concrete NU-Girder, Foundation Data, Hydrologic Data and Location Sketch, see Sheet No. 2 1

Old roadway fill under the ends of the bridge shall be removed as shown. Removal of old roadway fill will be considered completely covered by the contract unit price for roadway excavation.

Roadway fill shall be completed to the final roadway section and up to the elevation of the bottom of the concrete beam within the limits of the structure and for not less than 25 feet in back of the fill face of the end bents before any piles are driven for any bents falling within the embankment section.

GENERAL ELEVATION

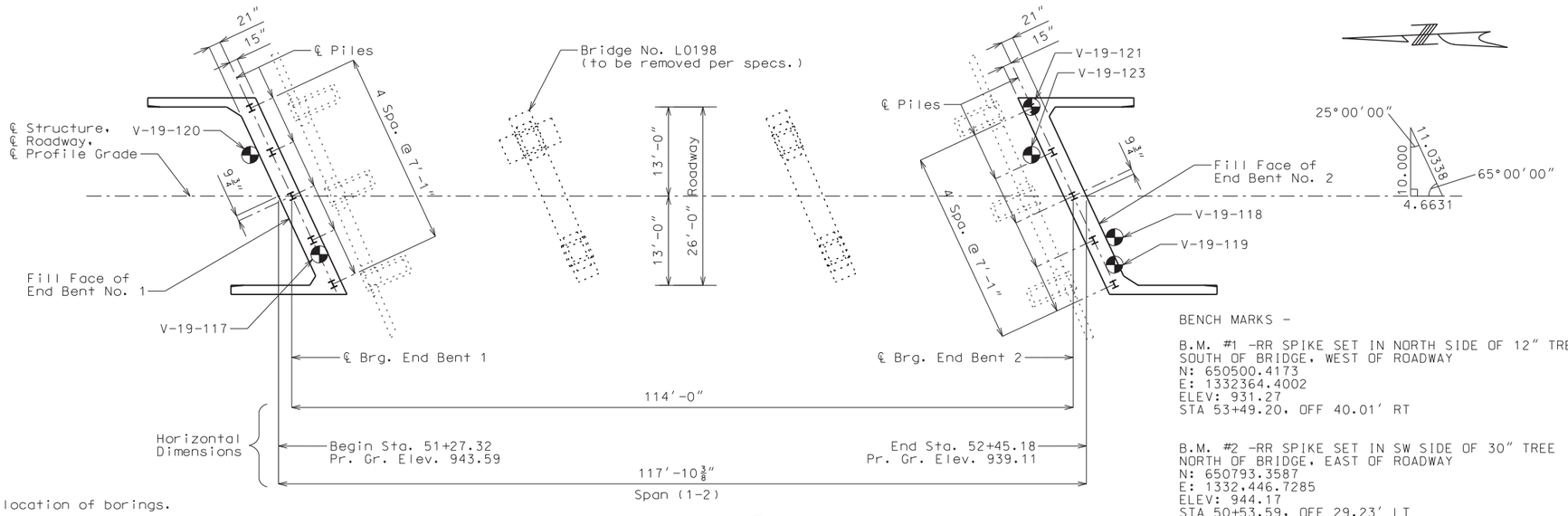

Indicates location of borings.

PLAN

BENCH MARKS -

B.M. #1 -RR SPIKE SET IN NORTH SIDE OF 12″ TREE
SOUTH OF BRIDGE, WEST OF ROADWAY
N: 650500.4173
E: 1332364.4002
ELEV: 931.27
STA 53+49.20, OFF 40.01′ RT

B.M. #2 -RR SPIKE SET IN SW SIDE OF 30″ TREE
NORTH OF BRIDGE, EAST OF ROADWAY
N: 650793.3587
E: 1332,446.7285
ELEV: 944.17
STA 50+53.59, OFF 29.23′ LT

Notice and Disclaimer Regarding Boring Log Data

The locations of all subsurface borings for this structure are shown on the plan sheet(s) for this structure. The boring data for all locations indicated, as well as any other boring logs or other factual records of subsurface data and investigations performed by the department for the design of the project, are shown on Sheet(s) No. 24-36 and may be included in the Electronic Bridge Deliverables. They will also be available from the Project Contact upon written request. No greater significance or weight should be given to the boring data depicted on the plan sheets than is given to the subsurface data available from the district or elsewhere.

The Commission does not represent or warrant that any such boring data accurately depicts the conditions to be encountered in constructing this project. A contractor assumes all risks it may encounter in basing its bid prices, time or schedule of performance on the boring data depicted here or those available from the district, or on any other documentation not expressly warranted, which the contractor may obtain from the Commission.

BRIDGE: ROUTE 123 OVER BARREN CREEK

ROUTE 123 FROM ROUTE 32 TO ROUTE 215
ABOUT 1.0 MILES SOUTH OF ROUTE 32
BEG. STA. 51+27.32

STD. 609.00
STD. 617.10
STD. 706.35

Designed Jan 2020
Detailed Jan 2020
Checked Jan 2020

Note: This drawing is not to scale. Follow dimensions.

STATE OF MISSOURI
MARK EUGENE DOERFLINGER
NUMBER E-26002
REGISTERED PROFESSIONAL ENGINEER
THIS SHEET HAS BEEN SIGNED, SEALED AND DATED ELECTRONICALLY.

DATE PREPARED	6/11/2020
ROUTE	123
STATE	MO
DISTRICT	BR
SHEET NO.	1
COUNTY	POLK
JOB NO.	J7S3205
CONTRACT ID.	
PROJECT NO.	
BRIDGE NO.	A8871

DESCRIPTION

DATE

MISSOURI HIGHWAYS AND TRANSPORTATION COMMISSION
105 WEST CAPITOL
JEFFERSON CITY, MO 65102
1-888-ASK-MODOT (1-888-275-6636)

1411 East 104th St.
Kansas City, MO 64131
Tel (816) 874-4655
Fax (816) 874-4675
www.trekkdesigngroup.com
Missouri Cert. of Authority 2002010300
TREKK DESIGN GROUP, LLC

IF A SEAL IS PRESENT ON THIS SHEET IT HAS BEEN ELECTRONICALLY SEALED AND DATED.

Estimated Quantities

Item		Substr.	Superstr.	Total
Class 1 Excavation	cu. yard	130		130
Removal of Bridges (L0198)	lump sum			1
Bridge Approach Slab (Minor Road)	sq. yard		116	116
Galvanized Structural Steel Piles (12 in)	linear foot	235		235
Pre-Bore for Piling	linear foot	141		141
Pile Point Reinforcement	each	10		10
Class B Concrete (Substructure)	cu. yard	30.2		30.2
* Type D Barrier	linear foot		288	288
Slab On Concrete NU-Girder	sq. yard		372	372
NU 53, Prestressed Concrete NU-Girder	linear foot		344	344
Steel Intermediate Diaphragm for P/S Concrete Girders	each		4	4
Vertical Drain At End Bents	each		2	2
Laminated Neoprene Bearing Pad (Tapered)	each		6	6

* Barrier shall be cast-in-place option or slip-form option.

All concrete above the construction joint in the end bents is included in the Estimated Quantities for Slab or Concrete NU-Girder.

All reinforcement in the end bents is included in the Estimated Quantitites for Slab on Concrete NU-Girder.

Hydrologic Data

Drainage Area = 7.9 mi^2
Design Flood Frequency = 50 years
Design Flood Discharge = 3,600 cfs
Design Flood (D.F.) Elevation = 931.81
Base Flood (100-year)
Base Flood Elevation = 932.52
Base Flood Discharge = 4,230 cfs
Estimated Backwater = 1.89 ft
Average Velocity thru Opening = 7.77 ft/s
Freeboard (50-year)
Freeboard = 2.41 ft
Roadway Overtopping
Overtopping Flood Discharge = NA
Overtopping Flood Frequency = >500 years
500-year Flood Elevation = 934.02

Foundation Data

Type	Design Data		Bent Number 1	Bent Number 2
Load Bearing Pile	Pile Type and Size		HP 12x53	HP 12x53
	Number	ea	5	5
	Approximate Length Per Each	ft	15	32
	Pile Point Reinforcement	ea	All	All
	Min. Galvanized Penetration (Elev.)	ft	Full Length	Full Length
	Pile Driving Verification Method		DF	DF
	Resistance Factor		0.4	0.4
	Minimum Nominal Axial Compressive Resistance	kip	663	663

DF = FHWA-modified Gates Dynamic Formula

Minimum Nominal Axial Compressive Resistance = Maximum Factored Loads/Resistance Factor

HP piles are anticipated to be driven to refusal on rock. Review all borings for deapth of rock and restrict driving as appropriate to comply with hard rock driving criteria in accordance with Sec 702.

Prebore for piles at Bent No. 2 to elevation 902.0.

All piles shall be galvanized down to the minimum galvanized penetration (elevation).

Pile point reinforcement need not be galvanized. Shop drawings will not be required for pile point reinforcement.

The contractor shall make every effort to achieve the minimum galvanized penetration (elevation) shown on the plans for all piles. Deviations in penetration less than 5 feet of the minimum will be considered acceptable provided the contractor makes the necessary corrections to ensure the minimum penetration is achieved on subsequent piles.

General Notes:

Design Specifications:
2012 AASHTO LRFD Bridge Design Specifications (6th Ed.) and 2013 Interim Revisions
Seismic Design Category = A

Design Loading:
Vehicular = HL-93
Future Wearing Surface = 35 lb/sf
Earth = 120#/Cu. Ft., Equivalent Fluid Pressure = 45 lb/cf (min.)
Superstructure: Non-Composite for dead load.
Composite for live load.

Design Unit Stresses:
Class B Concrete (Substructure) f'c = 3,000 psi
Class B-1 Concrete (Barrier Curb) f'c = 4,000 psi
Class B-2 Concrete (Superstructure, except Prestressed Girders and Barrier Curb) f'c = 4,000 psi
Reinforcing Steel (Grade 60) fy = 60,000 psi
Structural Steel HP Pile (ASTM A709 Grade 50S) fy = 50,000 psi
For Prestressed Girder Stresses, See Sheets No. 10 & 11
For Precast Prestressed Panel Stresses, See Sheet No. 13

Neoprene Pads:
Laminated Neoprene Bearing Pads shall be 60 durometer and shall be in accordance with Sec. 716.

Joint Filler:
All joint filler shall be in accordance with Section 1057 for preformed sponge rubber expansion and partition joint filler, except as noted.

Reinforcing Steel:
Minimum clearance to reinforcing steel shall be 1 1/2" unless otherwise shown.

Traffic Handling:
Structure to be closed during construction. See roadway plans for traffic control.

Miscellaneous:
MoDOT Construction personnel will indicate the type of joint filler option used under the precast panels for this structure:

☐ Constant Joint Filler

☐ Variable Joint Filler

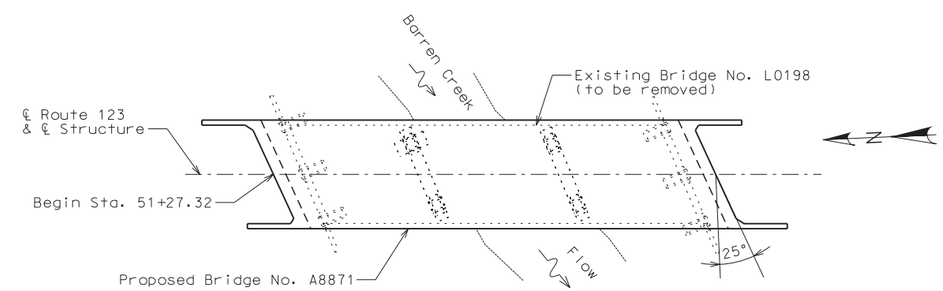

LOCATION SKETCH

Estimated Quantities for Slab on Concrete NU-Girder

Item		Total
Class B-2 Concrete	cu. yard	131.7
Reinforcing Steel (Epoxy Coated)	pound	26,790

The table of Estimated Quantities for Slab on Concrete NU-Girder represents the quantities used by the State in preparing the cost estimate for concrete slabs. The area of the concrete slab will be measured to the nearest square yard longitudinally from end of slab to end of slab and transversely from out to out of bridge slab (or with the horizontal dimensions as shown on the plan of slab). Payment for prestressed panels, conventional forms, all concrete and epoxy coated reinforcing steel will be considered completely covered by the contract unit price for the slab. Variations may be encountered in the estimated quantities but the variations cannot be used for an adjustment in the contract unit price.

Method of forming the slab shall be as shown on the plans and in accordance with Sec. 703. All hardware for forming the slab to be left in place as a permanent part of the structure shall be coated in accordance with ASTM A123 or ASTM B633 with a thickness class SC 4 and a finish type I, II or III.

The Estimated Quantities for Slab on Concrete NU-Girder are based on skewed precast prestressed end panels.

Class B-2 Concrete quantity is based on minimum top flange thickness and minimum joint material thickness.

The prestressed panel quantities are not included in the table of Estimated Quantities for Slab on Concrete NU-Girder.

STATE OF MISSOURI
MARK EUGENE DOERFLINGER
NUMBER E-26002
REGISTERED PROFESSIONAL ENGINEER
THIS SHEET HAS BEEN SIGNED, SEALED AND DATED ELECTRONICALLY.

DATE PREPARED 7/7/2020
ROUTE 123 | STATE MO
DISTRICT BR | SHEET NO. 2
COUNTY POLK
JOB NO. J7S3205
CONTRACT ID.
PROJECT NO.
BRIDGE NO. A8871

DESCRIPTION | DATE

MISSOURI HIGHWAYS AND TRANSPORTATION COMMISSION
105 WEST CAPITOL
JEFFERSON CITY, MO 65102
1-888-ASK-MODOT (1-888-275-6636)

IF A SEAL IS PRESENT ON THIS SHEET IT HAS BEEN ELECTRONICALLY SEALED AND DATED.

TREKK DESIGN GROUP, LLC
1411 East 104th St.
Kansas City, MO 64131
Tel (816) 874-4655
Fax (816) 874-4675
www.trekkdesigngroup.com
Missouri Cert. of Authority 2002010300

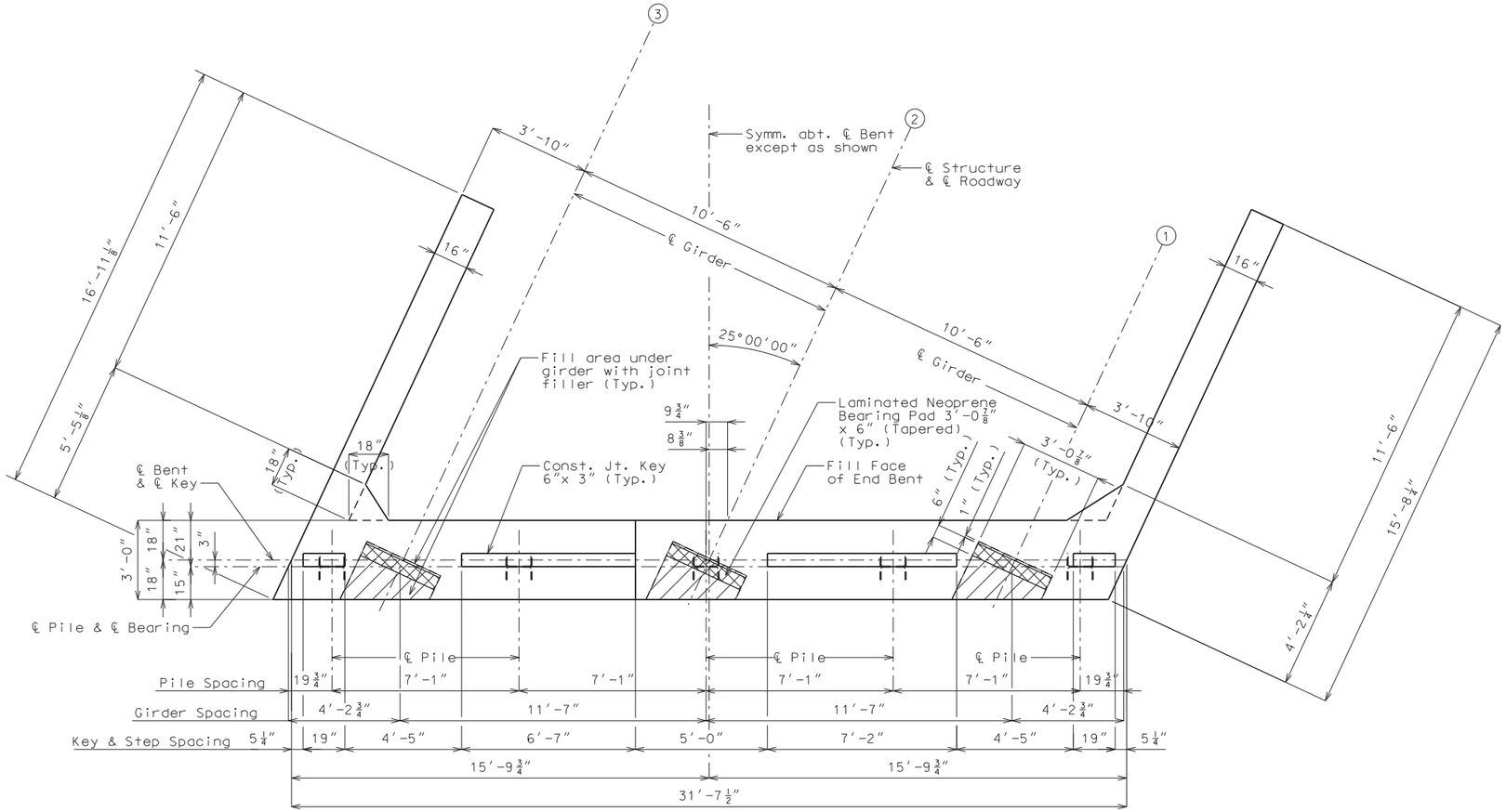

PLAN OF BEAM

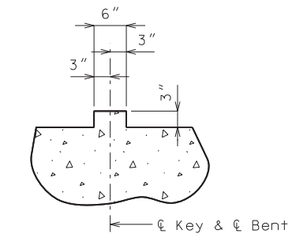

SECTION THRU KEY

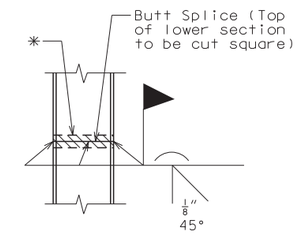

STEEL PILE SPLICE
(If required)

* Galvanizing material shall be omitted or removed one inch clear of weld locations in accordance with Sec 702.

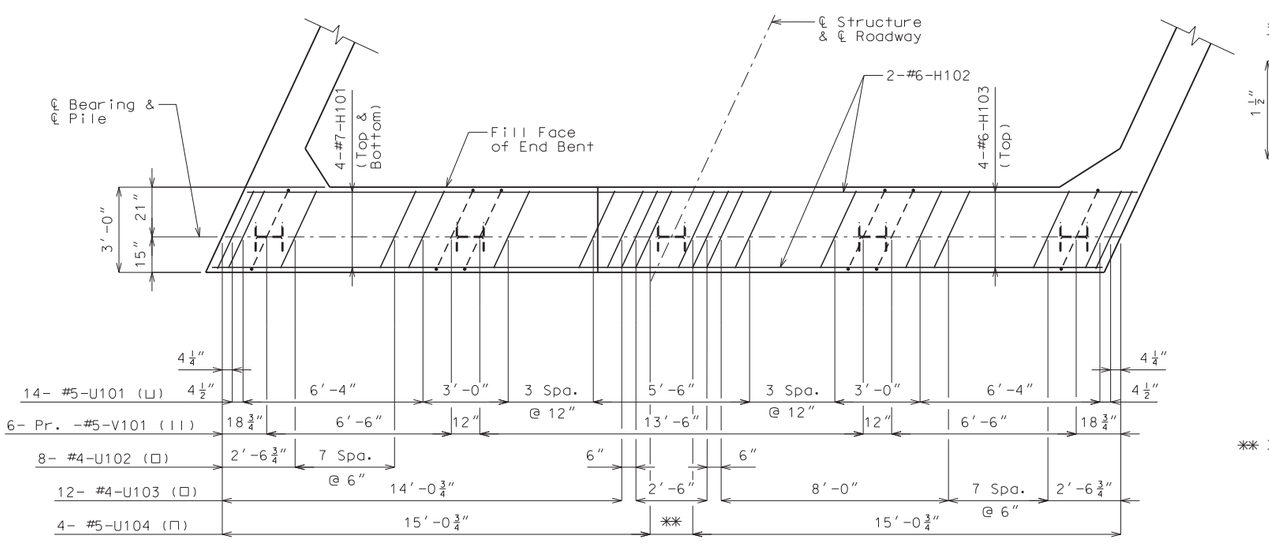

PLAN OF BEAM SHOWING REINFORCEMENT
(Keys not shown for clarity)

** 3 Spa. @ 6"

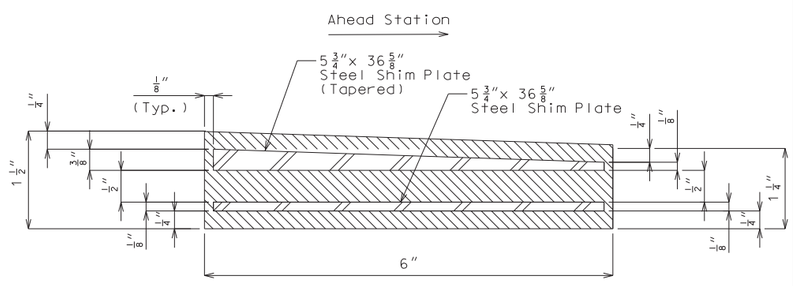

SECTION THRU
LAMINATED NEOPRENE
BEARING PAD

Notes:
Work this sheet with Sheets No. 4 & 5.

All U-bars and Pr. V-bars shall be placed parallel to ℄ Roadway.

Reinforcing steel shall be shifted to clear piles. U-bars shall clear piles by at least 1 1/2 inches.

DETAILS OF END BENT NO. 1

Note: This drawing is not to scale. Follow dimensions.

Sheet No. 3 of 36

Detailed Jan 2020
Checked Jan 2020

STATE OF MISSOURI
MARK EUGENE DOERFLINGER
NUMBER E-26002
REGISTERED PROFESSIONAL ENGINEER
THIS SHEET HAS BEEN SIGNED, SEALED AND DATED ELECTRONICALLY.

DATE PREPARED	6/11/2020
ROUTE	123
STATE	MO
DISTRICT	BR
SHEET NO.	3
COUNTY	POLK
JOB NO.	J7S3205
CONTRACT ID.	
PROJECT NO.	
BRIDGE NO.	A8871

DATE	DESCRIPTION

MISSOURI HIGHWAYS AND TRANSPORTATION COMMISSION
105 WEST CAPITOL
JEFFERSON CITY, MO 65102
1-888-ASK-MODOT (1-888-275-6636)

TREKK DESIGN GROUP, LLC
1411 East 104th St.
Kansas City, MO 64131
Tel (816) 874-4651
Fax (816) 874-4675
www.trekkdesigngroup.com
Missouri Corp. of Authority 2002010300

IF A SEAL IS PRESENT ON THIS SHEET IT HAS BEEN ELECTRONICALLY SEALED AND DATED.

B_A8871_003_J7S3205_EndBent-1-1.dgn 1:07:02 PM 6/11/2020

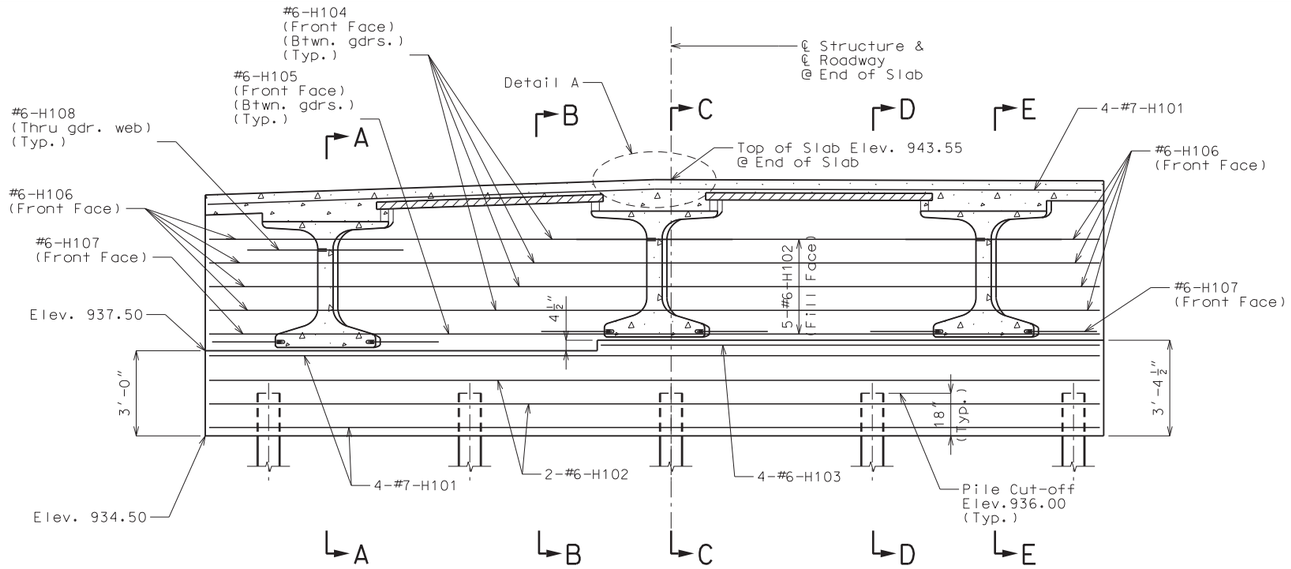

SECTION NEAR END BENT

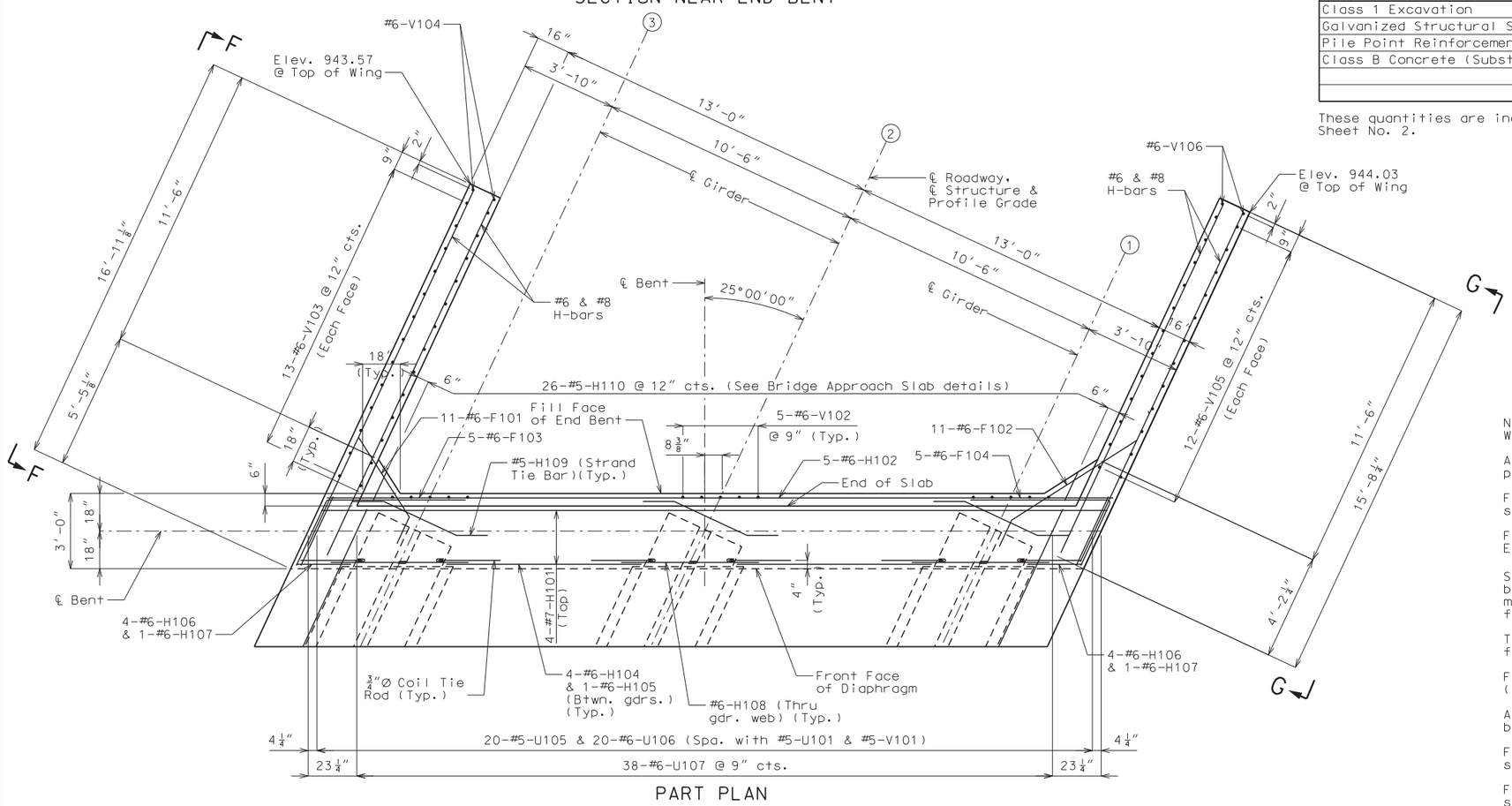

PART PLAN

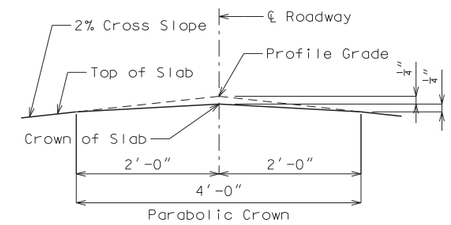

DETAIL A

Substructure Quantity Table for Bent No. 1		
Item		Quantity
Class 1 Excavation	cu. yard	65
Galvanized Structural Steel Pile (12 in.)	linear foot	75
Pile Point Reinforcement	each	5
Class B Concrete (Substructure)	cu. yard	15.1

These quantities are included in the Estimated Quantities table on Sheet No. 2.

Notes:
Work this sheet with Sheets No. 3 & 5.

All U-bars and #5-H110 bars shall be placed parallel to ℄ Roadway.

For details of Vertical Drain at End Bents, see Sheet No. 6.

For Sections A-A, B-B, C-C, D-D & E-E and Elevations F-F & G-G see Sheet No. 5.

Strands at end of girders shall be field bent or, if necessary, cut in field to maintain 1 1/2" minimum clearance to fill face of end bent.

The #6-F101 & #6-F102 bars shall be bent in the field to clear girders.

For location of Coil Tie Rods and #5-H109 (Strand Tie Bar), see Sheets No. 10 & 11.

All concrete in the end bent above top of beam and below top of slab shall be Class B-2.

For reinforcement of the Barrier Curb, see Sheet No. 18.

For details of Bridge Approach Slab, see Sheet No. 20.

STATE OF MISSOURI
MARK EUGENE DOERFLINGER
NUMBER E-26002
REGISTERED PROFESSIONAL ENGINEER
THIS SHEET HAS BEEN SIGNED, SEALED AND DATED ELECTRONICALLY.

DATE PREPARED	
6/11/2020	
ROUTE	STATE
123	MO
DISTRICT	SHEET NO.
BR	4
COUNTY	
POLK	
JOB NO.	
J7S3205	
CONTRACT ID.	
PROJECT NO.	
BRIDGE NO.	
A8871	

DESCRIPTION

DATE

IF A SEAL IS PRESENT ON THIS SHEET IT HAS BEEN ELECTRONICALLY SEALED AND DATED.

MISSOURI HIGHWAYS AND TRANSPORTATION COMMISSION
105 WEST CAPITOL
JEFFERSON CITY, MO 65102
1-888-ASK-MODOT (1-888-275-6636)

TREKK DESIGN GROUP, LLC
1411 East 19th St.
Kansas City, MO 64131
Tel (816) 874-4855
Fax (816) 874-4875
www.trekkdesigngroup.com
Missouri Cert. of Authority 2002010300

Detailed Jan 2020
Checked Jan 2020

Note: This drawing is not to scale. Follow dimensions.

B_A8871_004_J7S3205_EndBent-1-2.dgn 1:07:43 PM 6/11/2020

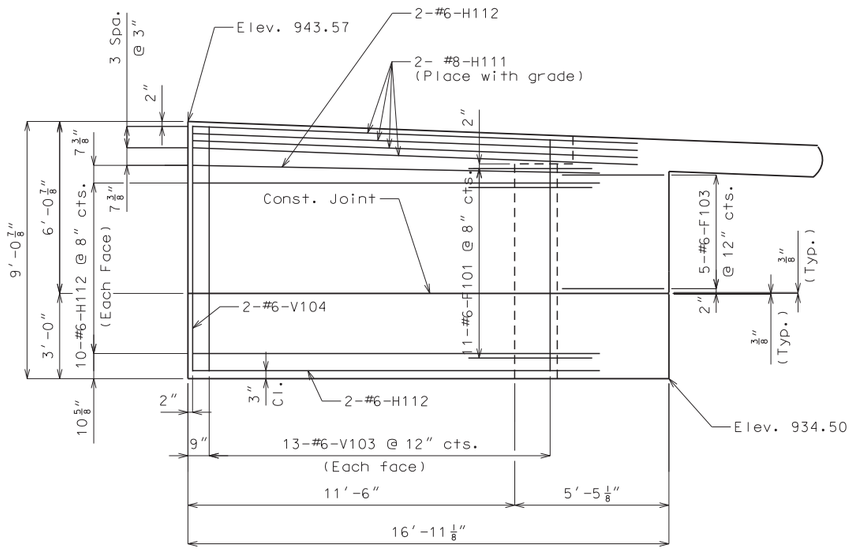

ELEVATION F-F

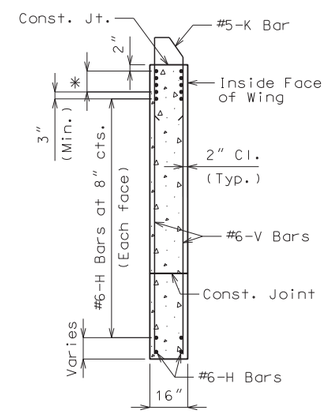

TYPICAL SECTION
THRU WING

* #8-H Bars at 3" cts.
(Each face)(Place with grade)

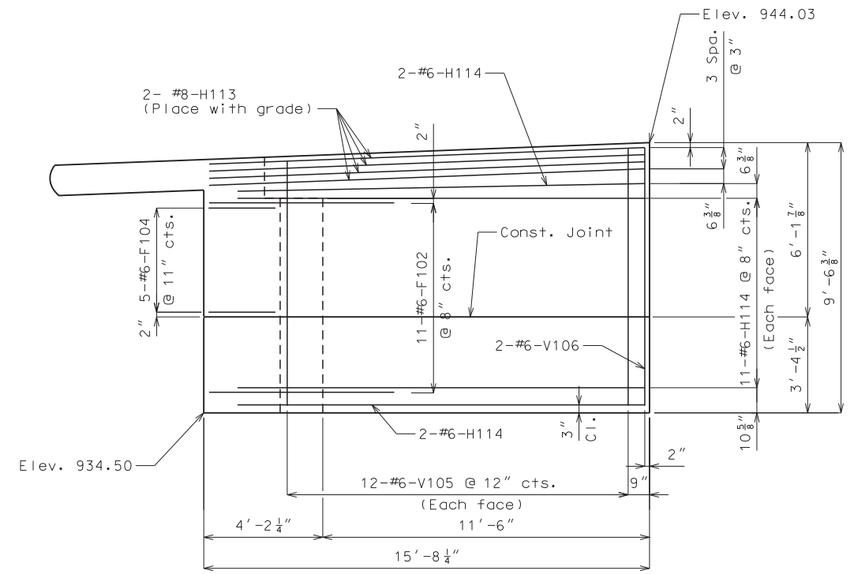

ELEVATION G-G

Notes:

Work this sheet with Sheets No. 3 & 4.

For locations of Sections A-A, B-B, C-C, D-D & E-E and Elevations F-F & G-G, see Sheet No. 4.

For reinforcement of barrier curb, see Sheet No. 18.

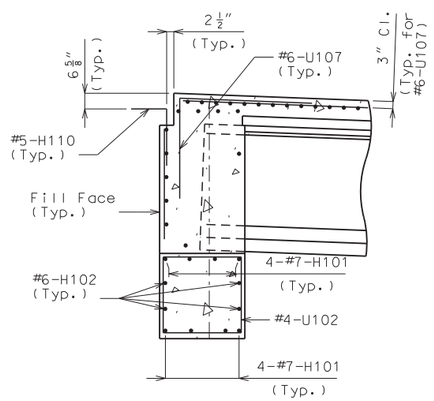

SECTION A-A

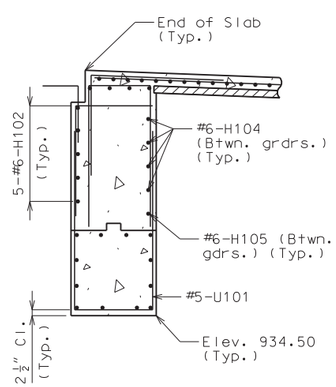

SECTION B-B

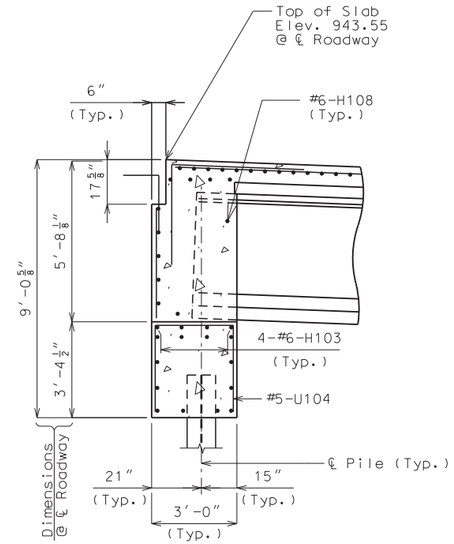

SECTION C-C

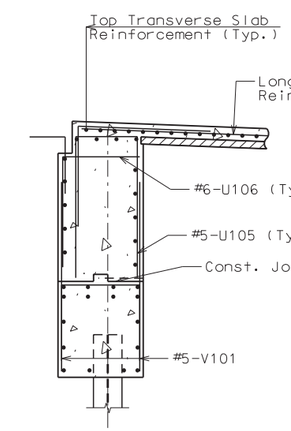

SECTION D-D

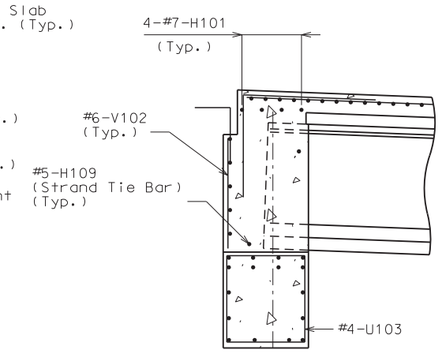

SECTION E-E

DETAILS OF END BENT NO. 1

Detailed Jan 2020
Checked Jan 2020

Note: This drawing is not to scale. Follow dimensions.

STATE OF MISSOURI
MARK EUGENE DOERFLINGER
NUMBER E-26002
REGISTERED PROFESSIONAL ENGINEER
THIS SHEET HAS BEEN SIGNED, SEALED AND DATED ELECTRONICALLY.

DATE PREPARED	6/11/2020
ROUTE 123	STATE MO
DISTRICT BR	SHEET NO. 5
COUNTY POLK	
JOB NO. J7S3205	
CONTRACT ID.	
PROJECT NO.	
BRIDGE NO. A8871	

DATE	DESCRIPTION

IF A SEAL IS PRESENT ON THIS SHEET IT HAS BEEN ELECTRONICALLY SEALED AND DATED.

MISSOURI HIGHWAYS AND TRANSPORTATION COMMISSION
105 WEST CAPITOL
JEFFERSON CITY, MO 65102
1-888-ASK-MODOT (1-888-275-6636)

TREKK DESIGN GROUP, LLC
1411 East 108th St.
Kansas City, MO 64131
Tel (816) 874-4651
Fax (816) 874-4675
www.trekkdesigngroup.com
Missouri Corp. of Authority 2002010300

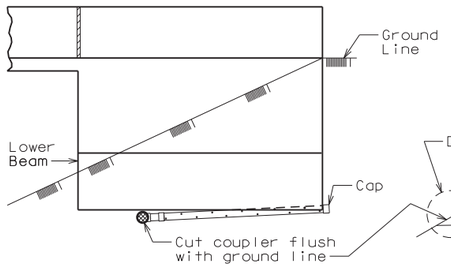

ELEVATION OF WING

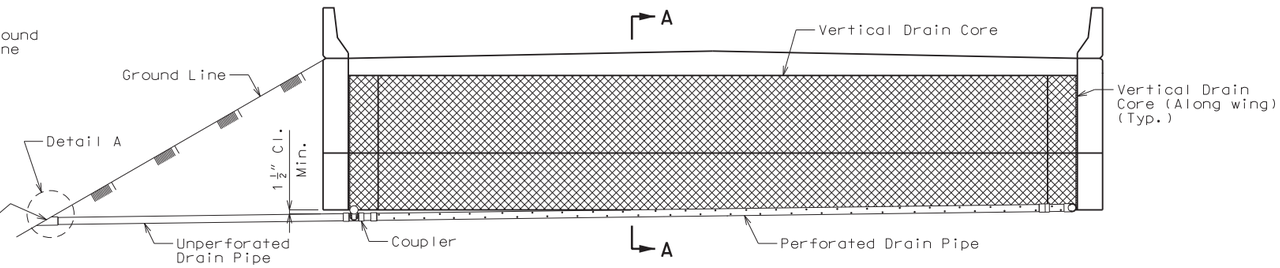

ELEVATION OF END BENT

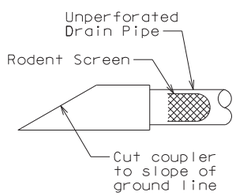

DETAIL A

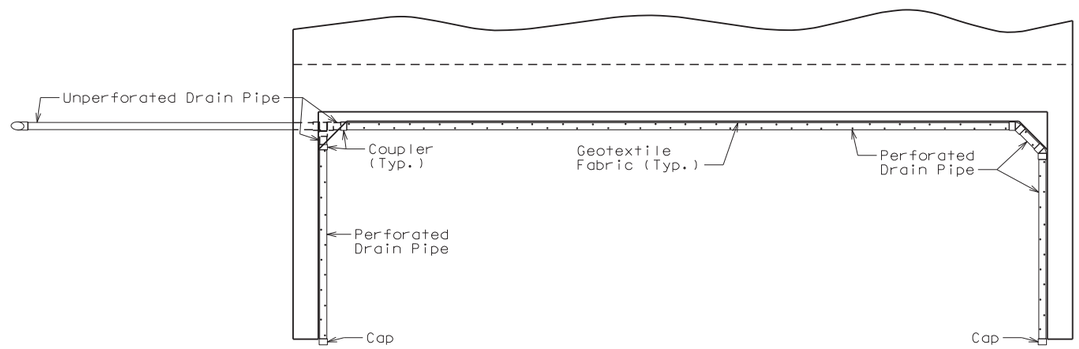

PLAN OF END BENT

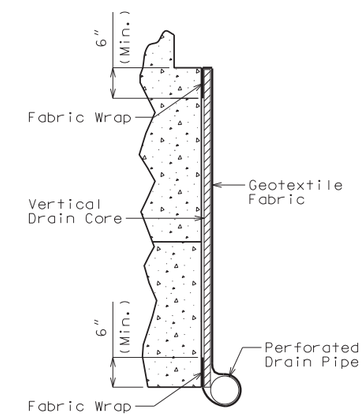

PART SECTION A-A
(Section thru wing similar)

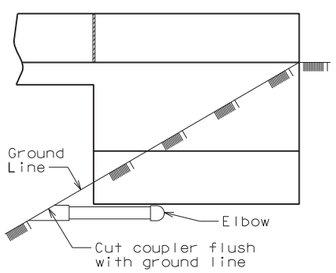

ELEVATION OF WING

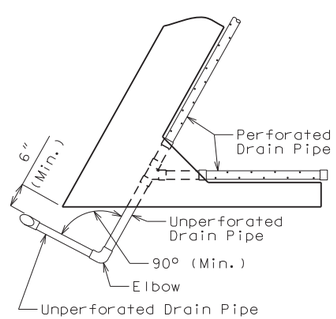

PART PLAN

OPTIONAL TURNED DRAIN
(Only if rock is encountered outside of wing)

General Notes:

All drain pipe shall be sloped 1 to 2 percent.

Drain pipe may be either 6-inch diameter corrugated metallic-coated steel pipe underdrain, 4-inch diameter corrugated polyvinyl chloride (PVC) drain pipe, or 4-inch diameter corrugated polyethylene (PE) drain pipe.

Drain pipe shall be placed at fill face of end bent and inside face of wings. The pipe shall slope to lowest grade of ground line, also missing the lower beam of end bent by a minimum of 1 1/2 inches.

Perforated pipe shall be placed at fill face side and inside face of wings at the bottom of end bent and plain pipe shall be used where the vertical drain ends to the exit at ground line.

VERTICAL DRAIN AT END BENTS
(Squared end bent shown, skewed end bent similar)

Detailed Jan 2020
Checked Jan 2020

Note: This drawing is not to scale. Follow dimensions.

STATE OF MISSOURI
MARK EUGENE DOERFLINGER
NUMBER E-26002
REGISTERED PROFESSIONAL ENGINEER
THIS SHEET HAS BEEN SIGNED, SEALED AND DATED ELECTRONICALLY.

DATE PREPARED	6/11/2020
ROUTE	123
STATE	MO
DISTRICT	BR
SHEET NO.	6
COUNTY	POLK
JOB NO.	J7S3205
CONTRACT ID.	
PROJECT NO.	
BRIDGE NO.	A8871

DATE	DESCRIPTION

IF A SEAL IS PRESENT ON THIS SHEET IT HAS BEEN ELECTRONICALLY SEALED AND DATED.

MISSOURI HIGHWAYS AND TRANSPORTATION COMMISSION
105 WEST CAPITOL
JEFFERSON CITY, MO 65102
1-888-ASK-MODOT (1-888-275-6636)

1411 East 104th St.
Kansas City, MO 64131
Tel (816) 874-4655
Fax (816) 874-4675
www.trekkdesigngroup.com
Missouri Cert. of Authority 2002010300
TREKK DESIGN GROUP, LLC

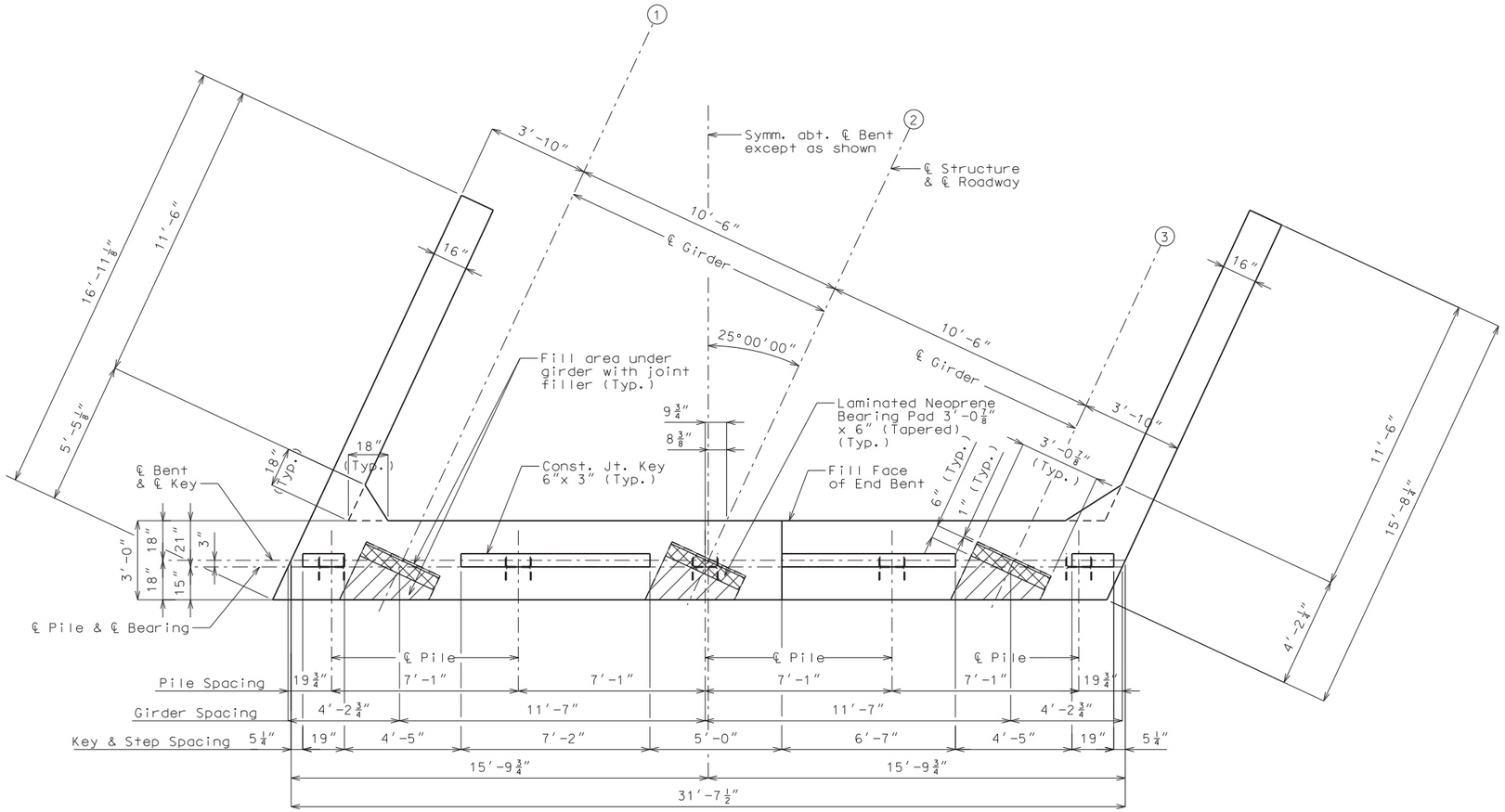

PLAN OF BEAM

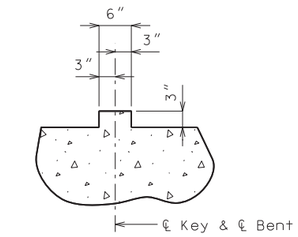

SECTION THRU KEY

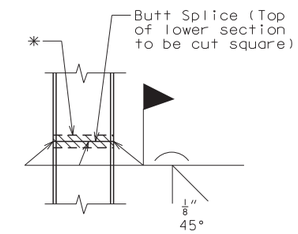

STEEL PILE SPLICE
(If required)

✳ Galvanizing material shall be omitted or removed one inch clear of weld locations in accordance with Sec 702.

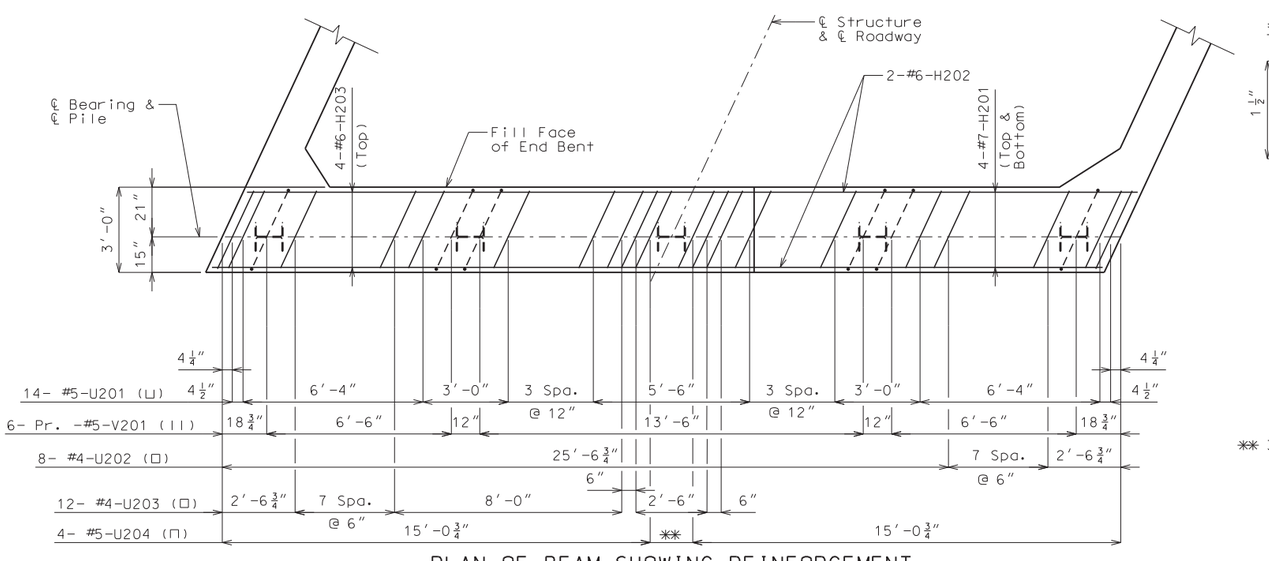

PLAN OF BEAM SHOWING REINFORCEMENT
(Keys not shown for clarity)

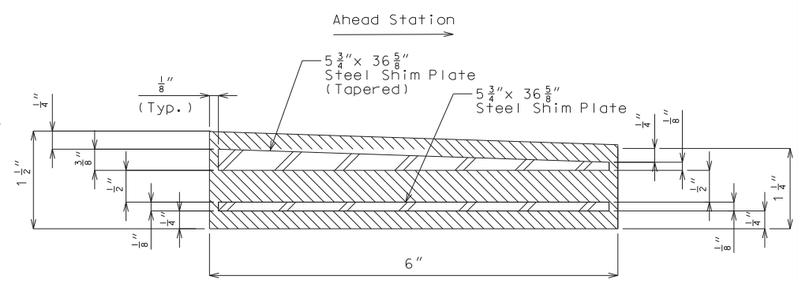

SECTION THRU
LAMINATED NEOPRENE
BEARING PAD

✳✳ 3 Spa. @ 6"

Notes:
Work this sheet with Sheets No. 8 & 9.

All U-bars and Pr. V-bars shall be placed parallel to ℄ Roadway.

Reinforcing steel shall be shifted to clear piles. U-bars shall clear piles by 1 1/2 inches.

DETAILS OF END BENT NO. 2

Detailed Jan 2020
Checked Jan 2020

Note: This drawing is not to scale. Follow dimensions.

STATE OF MISSOURI
MARK EUGENE DOERFLINGER
NUMBER E-26002
REGISTERED PROFESSIONAL ENGINEER
THIS SHEET HAS BEEN SIGNED, SEALED AND DATED ELECTRONICALLY.

DATE PREPARED	
6/11/2020	
ROUTE 123	STATE MO
DISTRICT BR	SHEET NO. 7
COUNTY POLK	
JOB NO. J7S3205	
CONTRACT ID.	
PROJECT NO.	
BRIDGE NO. A8871	

DATE	DESCRIPTION

IF A SEAL IS PRESENT ON THIS SHEET IT HAS BEEN ELECTRONICALLY SEALED AND DATED.

MISSOURI HIGHWAYS AND TRANSPORTATION COMMISSION
105 WEST CAPITOL
JEFFERSON CITY, MO 65102
1-888-ASK-MODOT (1-888-275-6636)

TREKK DESIGN GROUP, LLC
1411 East 104th St.
Kansas City, MO 64131
Tel (816) 874-4655
Fax (816) 874-4675
www.trekkdesigngroup.com
Missouri Corp. of Authority 2002010300

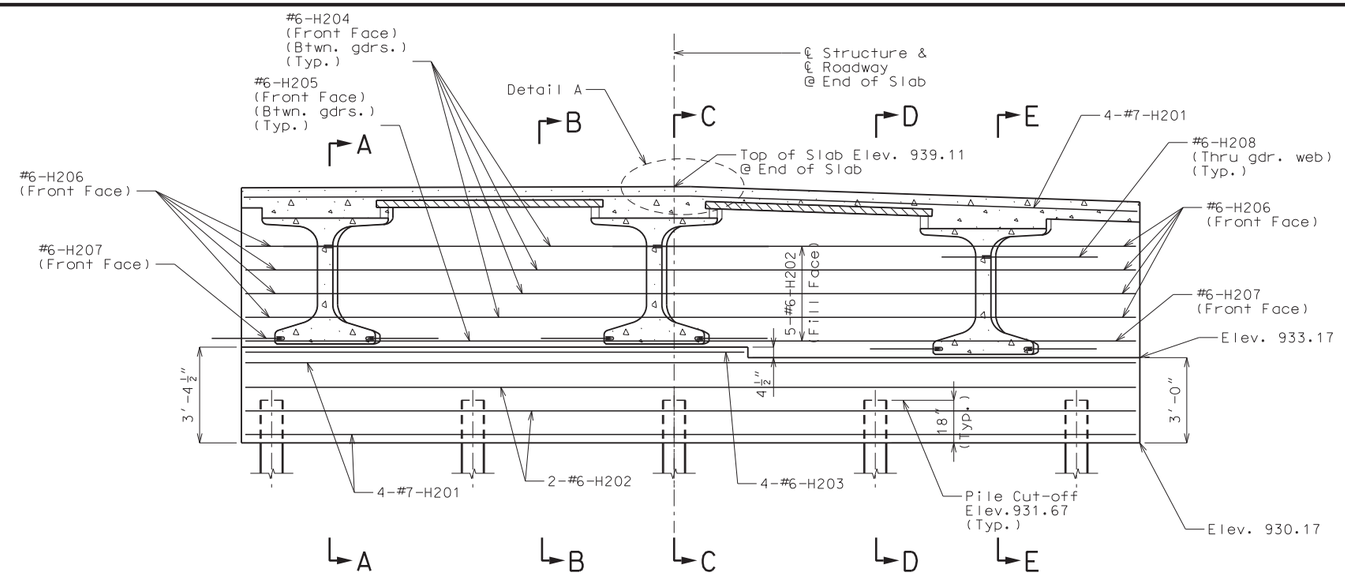

SECTION NEAR END BENT

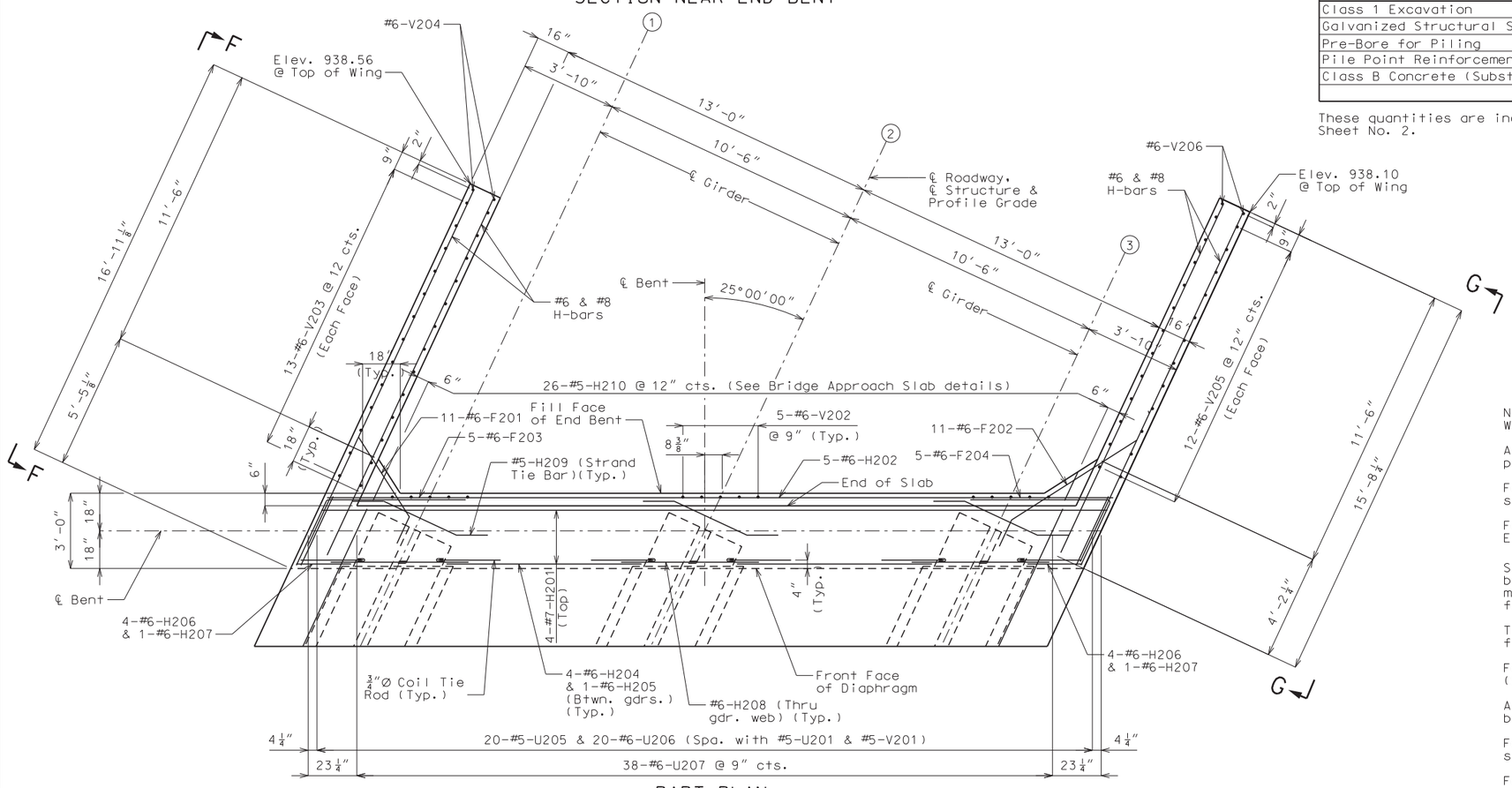

PART PLAN

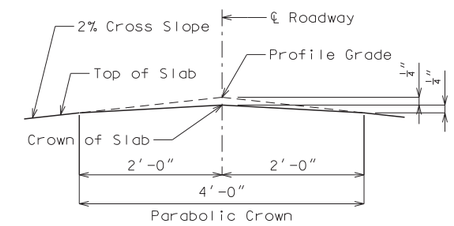

DETAIL A

Substructure Quantity Table for Bent No. 2		
Item		Quantity
Class 1 Excavation	cu. yard	65
Galvanized Structural Steel Pile (12 in.)	linear foot	160
Pre-Bore for Piling	linear foot	141
Pile Point Reinforcement	each	5
Class B Concrete (Substructure)	cu. yard	15.1

These quantities are included in the Estimated Quantities table on Sheet No. 2.

Notes:
Work this sheet with Sheets No. 7 & 9.

All U-bars and #5-H210 bars shall be placed parallel to ℄ Roadway.

For details of Vertical Drain at End Bents, see Sheet No. 6.

For Sections A-A, B-B, C-C, D-D & E-E and Elevations F-F & G-G see Sheet No. 9.

Strands at end of girders shall be field bent or, if necessary, cut in field to maintain 1 1/2" minimum clearance to fill face of end bent.

The #6-F201 & #6-F202 bars shall be bent in the field to clear girders.

For location of Coil Tie Rods and #5-H209 (Strand Tie Bar), see Sheets No. 10 & 11.

All concrete in the end bent above top of beam and below top of slab shall be Class B-2.

For reinforcement of the Barrier Curb, see Sheet No. 18.

For details of Bridge Approach Slab, see Sheet No. 20.

STATE OF MISSOURI
MARK EUGENE DOERFLINGER
NUMBER E-26002
REGISTERED PROFESSIONAL ENGINEER
THIS SHEET HAS BEEN SIGNED, SEALED AND DATED ELECTRONICALLY.

DATE PREPARED	
6/11/2020	
ROUTE 123	STATE MO
DISTRICT BR	SHEET NO. 8
COUNTY POLK	
JOB NO. J7S3205	
CONTRACT ID.	
PROJECT NO.	
BRIDGE NO. A8871	

IF A SEAL IS PRESENT ON THIS SHEET IT HAS BEEN ELECTRONICALLY SEALED AND DATED.

DESCRIPTION	DATE

MISSOURI HIGHWAYS AND TRANSPORTATION COMMISSION
105 WEST CAPITOL
JEFFERSON CITY, MO 65102
1-888-ASK-MODOT (1-888-275-6636)

TREKK DESIGN GROUP, LLC
1411 East 19th St.
Kansas City, MO 64127
Tel. (816) 874-4855
Fax. (816) 874-4875
www.trekkdesigngroup.com
Missouri Cert. of Authority 2002010300

Detailed Jan 2020
Checked Jan 2020

Note: This drawing is not to scale. Follow dimensions.

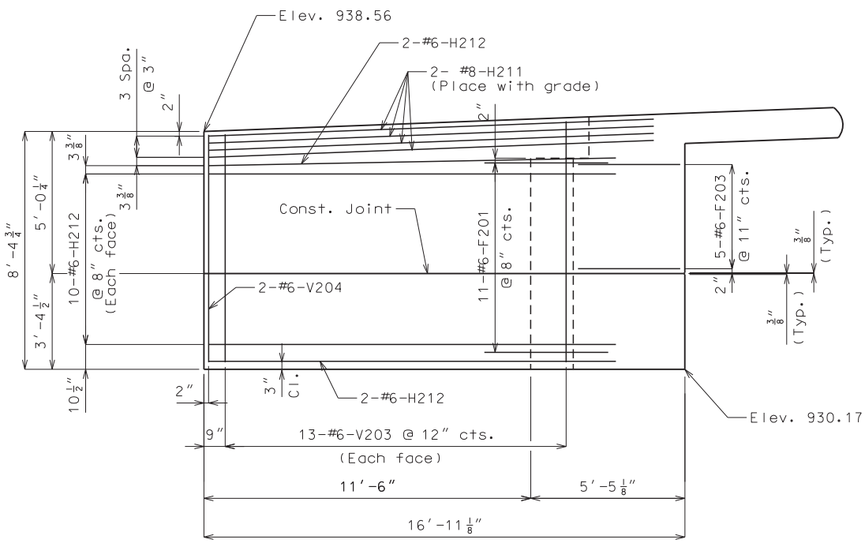

ELEVATION F-F

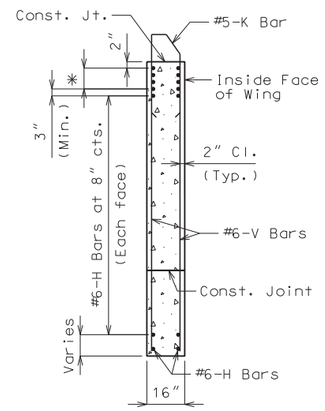

TYPICAL SECTION THRU WING

* #8-H Bars at 3" cts. (Each face)(Place with grade)

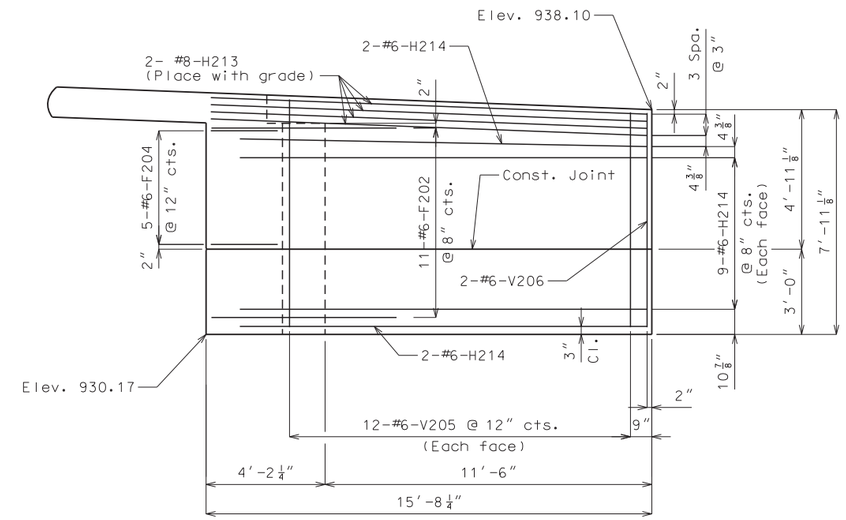

ELEVATION G-G

Notes:

Work this sheet with Sheets No. 7 & 8.

For location of Sections A-A, B-B, C-C, D-D & E-E and Elevations F-F & G-G see Sheet No. 8.

For reinforcement of barrier curb, see Sheet No. 18.

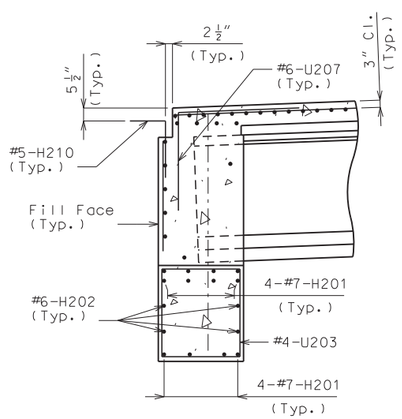

SECTION A-A

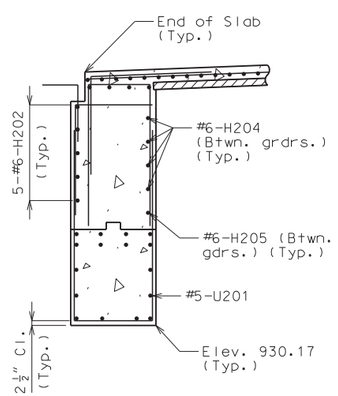

SECTION B-B

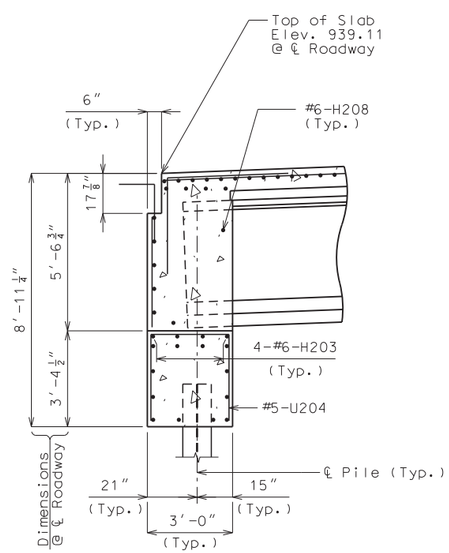

SECTION C-C

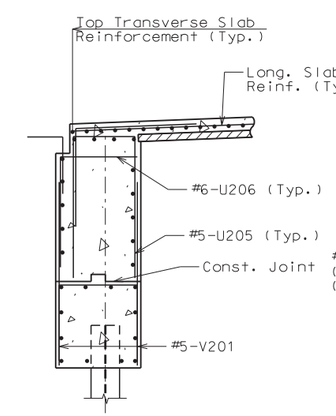

SECTION D-D

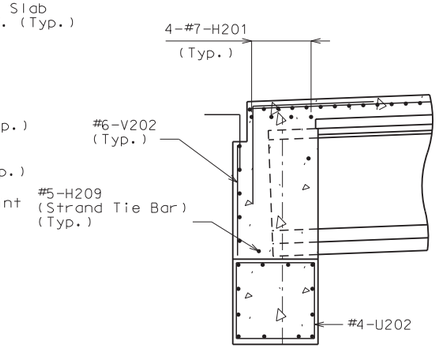

SECTION E-E

DETAILS OF END BENT NO. 2

Detailed Jan 2020
Checked Jan 2020

Note: This drawing is not to scale. Follow dimensions.

STATE OF MISSOURI
MARK EUGENE DOERFLINGER
NUMBER E-26002
REGISTERED PROFESSIONAL ENGINEER
THIS SHEET HAS BEEN SIGNED, SEALED AND DATED ELECTRONICALLY.

DATE PREPARED	6/11/2020
ROUTE	123
STATE	MO
DISTRICT	BR
SHEET NO.	9
COUNTY	POLK
JOB NO.	J7S3205
CONTRACT ID.	
PROJECT NO.	
BRIDGE NO.	A8871

DESCRIPTION

DATE

IF A SEAL IS PRESENT ON THIS SHEET IT HAS BEEN ELECTRONICALLY SEALED AND DATED.

MISSOURI HIGHWAYS AND TRANSPORTATION COMMISSION

105 WEST CAPITOL
JEFFERSON CITY, MO 65102
1-888-ASK-MODOT (1-888-275-6636)

1411 East 104th St.
Kansas City, MO 64131
Tel (816) 874-6655
Fax (816) 874-4675
www.trekdesigngroup.com

Missouri Cert. of Authority 2002010300

TREK DESIGN GROUP, LLC

Concrete for prestressed girders shall be Class A-1 with f'c = 8000 psi and f'ci = 7000 psi.

(+) indicates prestressing strand.

Use 48 strands with an initial prestress force of 2109 kips.

Prestressing tendons shall be uncoated, seven-wire, low-relaxation strands, 0.6 inch diameter in accordance with AASHTO M 203, Grade 270. Pretensioned members shall be in accordance with Sec 1029.

Fabricator shall be responsible for location and design of lifting devices.

✱ Girder top flange shall be steel troweled to a smooth finish for 8" at the edges, as shown. Apply two layers of 30-lb roofing felt as a bond breaker to this region only excluding where joint filler is applied. The center portion shall be rough finished by scarifying the surface transversely with a wire brush, and no laitance shall remain on the surface.

✱✱ At the contractor's option the location for bent-up strands may be varied from that shown for fully bonded strands only. The total number of bent-up strands shall not be changed. One strand tie bar is required for each layer of bent-up strands except at end bents which require one bar on the bottom layer of strands only.

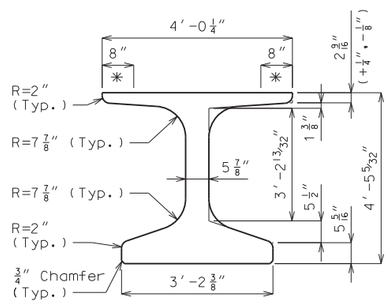

DIMENSIONS

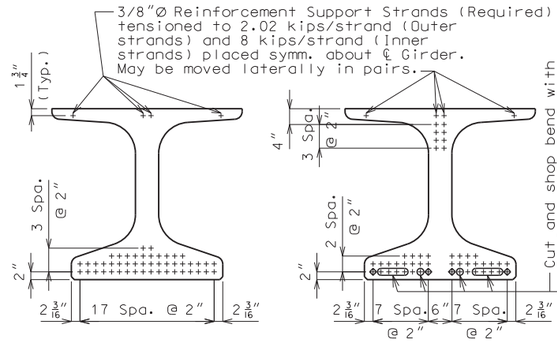

STRAND ARRANGEMENTS

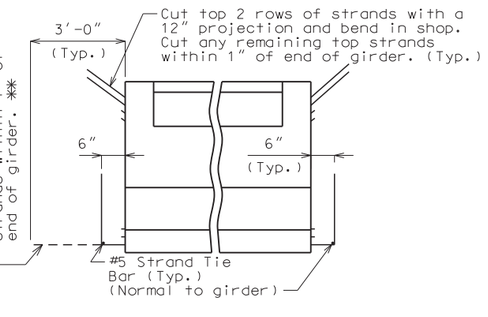

STRAND DETAILS AT GIRDER ENDS

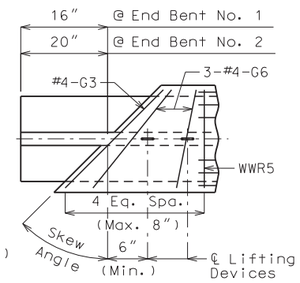

TOP FLANGE BLOCKOUT
(Mirror for right advanced)

BILL OF REINFORCING STEEL - EACH GIRDER			
NO.	SIZE & MARK	ACTUAL LENGTH	SHAPE
136	3 G1	2'-10"	8
12	5 G2	5'-3"	11
2	4 G3	4'-3"	20
6	4 G6	Varies	20

BENDING DIAGRAMS

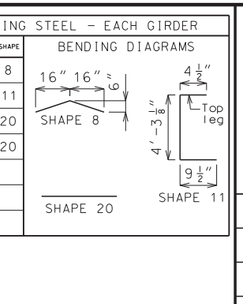

WELDED WIRE REINFORCEMENT - EACH GIRDER				
MARK	WIRE SIZE	S	L	J
WWR1	D22	4"	7'-8"	6 3/4"
WWR2	D22	8"	15'-4"	8"
WWR3	D22	12"	66'-0"	-

BENDING DIAGRAMS

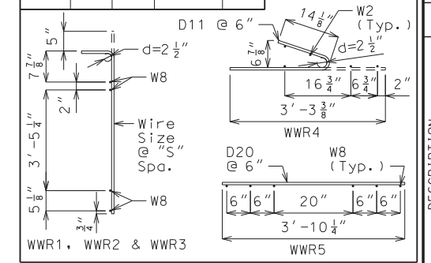

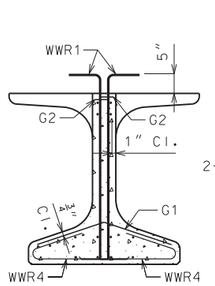

SECTION A-A
Strands not shown for clarity.

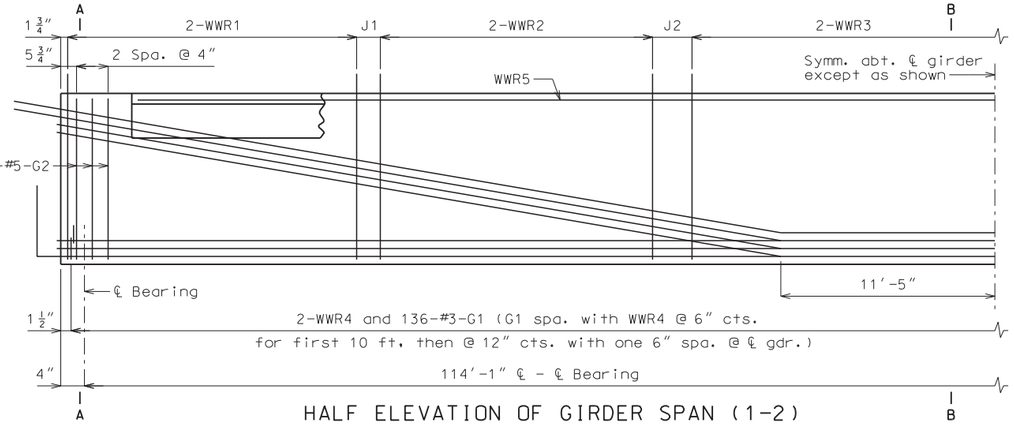

HALF ELEVATION OF GIRDER SPAN (1-2)

Exterior and interior girders are the same, except for holes for steel intermediate diaphragms. Reinforcement support strands not shown for clarity.

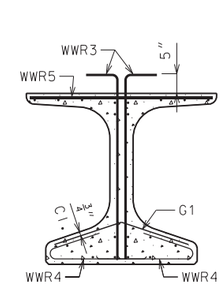

SECTION B-B
Strands not shown for clarity.

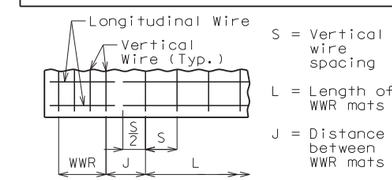

WELDED WIRE PLACEMENT

General Notes:

Reinforcing Steel:

All dimensions are out to out.

Hooks and bends shall be in accordance with the CRSI Manual of Standard Practice for Detailing Reinforced Concrete Structures, Stirrup and Tie Dimensions.

Actual bar lengths are measured along centerline of bar to the nearest inch.

Minimum clearance to reinforcing shall be 1", unless otherwise shown.

All bar reinforcement shall be Grade 60.

Welded Wire Reinforcement (WWR) shall be in accordance with AASHTO M 221. WWR shall not be epoxy coated.

Miscellaneous:

Cost of 3/4"Ø coil tie rods placed in diaphragms will be considered completely covered by the contract unit price for Prestressed Concrete NU-Girder.

Coil ties shall be held in place in the forms by slotted wire-setting-studs projecting thru forms. Studs are to be left in place or replaced with temporary plugs until girders are erected, then replaced by coil tie rods.

For location of coil ties and #6 bars at concrete bent diaphragms, see Sheets No. 4 and 8.

The 1 1/2"Ø holes shall be cast in the web for steel intermediate diaphragms. Drilling is not allowed. For location of holes and details of steel intermediate diaphragms, see Sheet No. 12.

For Girder Camber Diagram, see Sheet No. 14.

Alternate bar reinforcing steel details are provided and may be used. The same type of reinforcing steel shall be used for all girders in all spans.

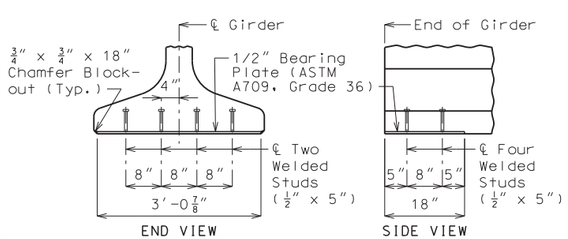

BEARING PLATE DETAILS

Galvanize the 1/2" bearing plate (ASTM A709 Grade 36) in accordance with ASTM A123.

Cost of furnishing, galvanizing, and installing the 1/2" bearing plate (ASTM A709 Grade 36) and welded studs in the prestressed girder will be considered completely covered by the contract unit price for Prestressed Concrete NU-Girder.

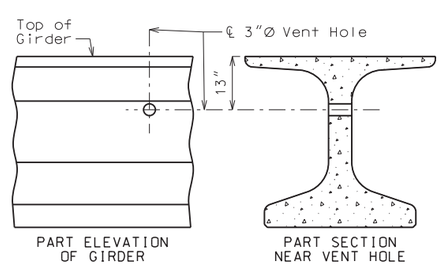

DETAILS OF VENT HOLE

Place vent holes at or near upgrade 1/3 point of girders and clear reinforcing steel or strands by 1 1/2" minimum and steel interm. diaphragm bolt connections by 6" minimum.

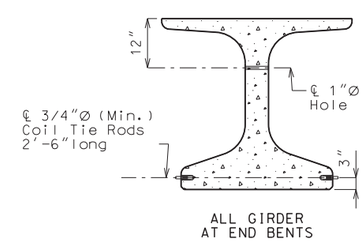

DETAILS OF COIL TIES

Cast 1"Ø hole horizontally (skewed) in girder for #6 bar 5'-6" long and clear reinforcing steel or strands by 1 1/2" minimum.

Detailed Jan 2020
Checked Jan 2020

Note: This drawing is not to scale. Follow dimensions.

STATE OF MISSOURI — MARK EUGENE DOERFLINGER — NUMBER E-26002 — REGISTERED PROFESSIONAL ENGINEER
THIS SHEET HAS BEEN DIGITALLY SEALED AND DATED ELECTRONICALLY.

DATE PREPARED	6/11/2020
ROUTE 123	STATE MO
DISTRICT BR	SHEET NO. 10
COUNTY POLK	
JOB NO. J7S3205	
CONTRACT ID.	
PROJECT NO.	
BRIDGE NO. A8871	

DESCRIPTION

DATE

MISSOURI HIGHWAYS AND TRANSPORTATION COMMISSION
105 WEST CAPITOL
JEFFERSON CITY, MO 65102
1-888-ASK-MODOT (1-888-275-6636)

TREKK DESIGN GROUP, LLC
1411 East 104th St.
Kansas City, MO 64131
Tel (816) 874-4655
Fax (816) 874-4675
www.trekkdesigngroup.com
Missouri Cert. of Authority 2002010300

IF A SEAL IS PRESENT ON THIS SHEET IT HAS BEEN ELECTRONICALLY SEALED AND DATED.

Concrete for prestressed girders shall be Class A-1 with f'c = 8000 psi and f'ci = 7000 psi.

(+) indicates prestressing strand.

Use 48 strands with an initial prestress force of 2109 kips.

Prestressing tendons shall be uncoated, seven-wire, low-relaxation strands, 0.6 inch diameter in accordance with AASHTO M 203, Grade 270. Pretensioned members shall be in accordance with Sec 1029.

Fabricator shall be responsible for location and design of lifting devices.

✱ Girder top flange shall be steel troweled to a smooth finish for 8" at the edges, as shown. Apply two layers of 30-lb roofing felt as a bond breaker to this region only excluding where joint filler is applied. The center portion shall be rough finished by scarifying the surface transversely with a wire brush, and no laitance shall remain on the surface.

✱✱ At the contractor's option the location for bent-up strands may be varied from that shown for fully bonded strands only. The total number of bent-up strands shall not be changed. One strand tie bar is required for each layer of bent-up strands except at end bents which require one bar on the bottom layer of strands only.

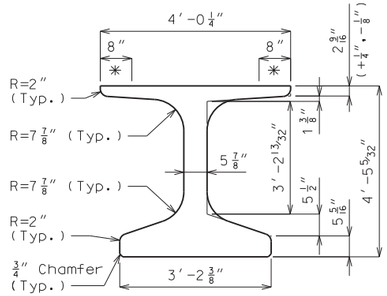

DIMENSIONS

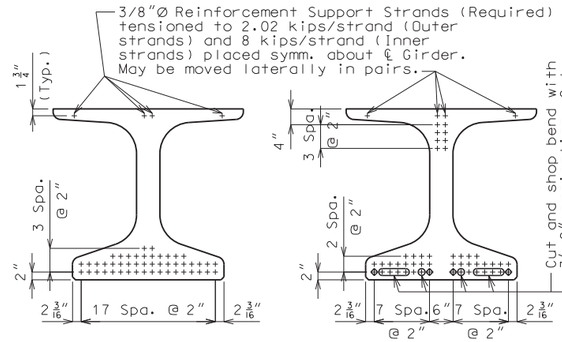

℄ GIRDER

END OF GIRDER

◆ Debond Strands at Ends (4'-0")

STRAND ARRANGEMENTS

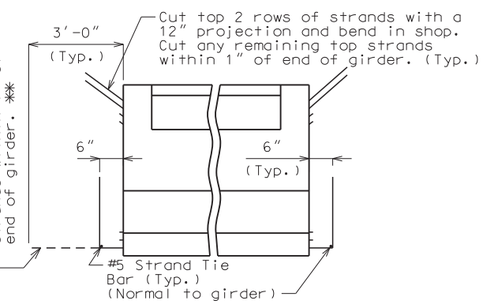

END BENT

STRAND DETAILS AT GIRDER ENDS

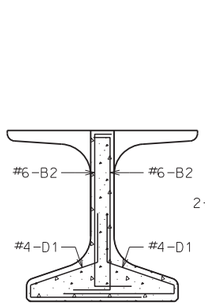

SECTION A-A

Strands not shown for clarity.

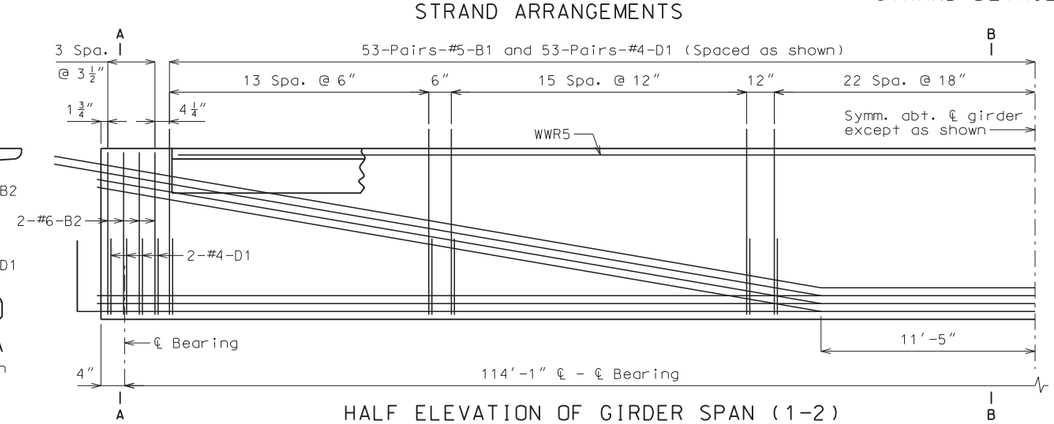

HALF ELEVATION OF GIRDER SPAN (1-2)

Exterior and interior girders are the same, except for holes for steel intermediate diaphragms. Reinforcement support strands not shown for clarity.

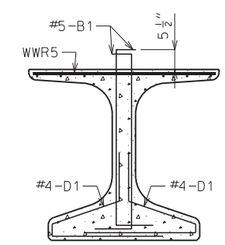

SECTION B-B

Strands not shown for clarity.

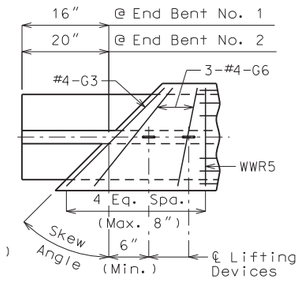

TOP FLANGE BLOCKOUT

(Mirror for right advanced)

BILL OF REINFORCING STEEL - EACH GIRDER			
NO.	SIZE & MARK	ACTUAL LENGTH	SHAPE
210	5 B1	5'-10"	11
16	6 B2	5'-1"	11
226	4 D1	4'-0"	9
2	4 G3	4'-3"	20
6	4 G6	Varies	20

BENDING DIAGRAMS

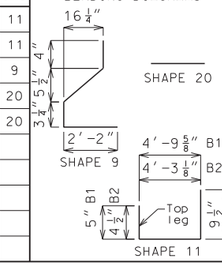

WELDED WIRE REINFORCEMENT - EACH GIRDER

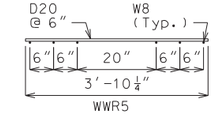

General Notes:

Reinforcing Steel:

All dimensions are out to out.

Hooks and bends shall be in accordance with the CRSI Manual of Standard Practice for Detailing Reinforced Concrete Structures, Stirrup and Tie Dimensions.

Actual bar lengths are measured along centerline of bar to the nearest inch.

Minimum clearance to reinforcing shall be 1".

All bar reinforcement shall be Grade 60.

Welded Wire Reinforcement (WWR) shall be in accordance with AASHTO M 221.

The two D1 bars may be furnished as one bar at the fabricator's option.

All B1 bars shall be epoxy coated.

Miscellaneous:

Cost of 3/4"Ø coil tie rods placed in diaphragms will be considered completely covered by the contract unit price for Prestressed Concrete NU-Girder.

Coil ties shall be held in place in the forms by slotted wire-setting-studs projecting thru forms. Studs are to be left in place or replaced with temporary plugs until girders are erected, then replaced by coil tie rods.

For location of coil ties and #6 bars at concrete bent diaphragms, see Sheets No. 4 and 8.

The 1 1/2"Ø holes shall be cast in the web for steel intermediate diaphragms. Drilling is not allowed. For location of holes and details of steel intermediate diaphragms, see Sheet No. 12.

For Girder Camber Diagram, see Sheet No. 14.

Alternate bar reinforcing steel details are provided and may be used. The same type of reinforcing steel shall be used for all girders in all spans

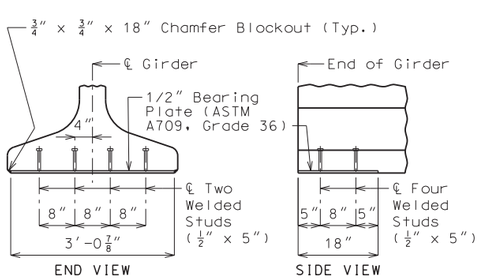

END VIEW

SIDE VIEW

BEARING PLATE DETAILS

Galvanize the 1/2" bearing plate (ASTM A709 Grade 36) in accordance with ASTM A123.

Cost of furnishing, galvanizing, and installing the 1/2" bearing plate (ASTM A709 Grade 36) and welded studs in the prestressed girder will be considered completely covered by the contract unit price for Prestressed Concrete NU-Girder.

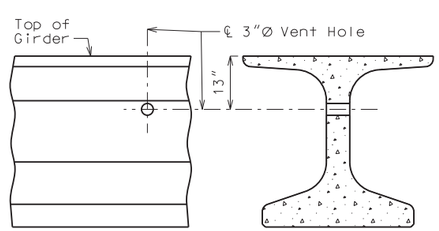

PART ELEVATION OF GIRDER

PART SECTION NEAR VENT HOLE

DETAILS OF VENT HOLE

Place vent holes at or near upgrade 1/3 point of girders and clear reinforcing steel or strands by 1 1/2" minimum and steel interm. diaphragm bolt connections by 6" minimum.

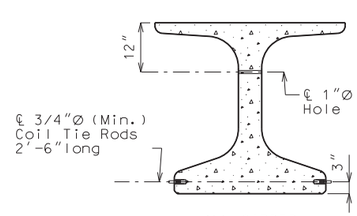

ALL GIRDER AT END BENTS

DETAILS OF COIL TIES

Cast 1"Ø hole horizontally (skewed) in girder for #6 bar 5'-6" long and clear reinforcing steel or strands by 1 1/2" minimum.

ALTERNATE BAR REINFORCING STEEL DETAILS

Detailed Jan 2020
Checked Jan 2020

Note: This drawing is not to scale. Follow dimensions.

STATE OF MISSOURI
MARK EUGENE DOERFLINGER
NUMBER E-26002
REGISTERED PROFESSIONAL ENGINEER
THIS SHEET HAS BEEN SIGNED, SEALED AND DATED ELECTRONICALLY.

DATE PREPARED	6/11/2020
ROUTE 123	STATE MO
DISTRICT BR	SHEET NO. 11
COUNTY POLK	
JOB NO. J7S3205	
CONTRACT ID.	
PROJECT NO.	
BRIDGE NO. A8871	

DATE	DESCRIPTION

IF A SEAL IS PRESENT ON THIS SHEET IT HAS BEEN ELECTRONICALLY SEALED AND DATED.

MISSOURI HIGHWAYS AND TRANSPORTATION COMMISSION
105 WEST CAPITOL
JEFFERSON CITY, MO 65102
1-888-ASK-MODOT (1-888-275-6636)

TREKK DESIGN GROUP, LLC
1411 East 104th St.
Kansas City, MO 64131
Tel (816) 874-4655
Fax (816) 874-4675
www.trekkdesigngroup.com
Missouri Cert. of Authority 2002010300

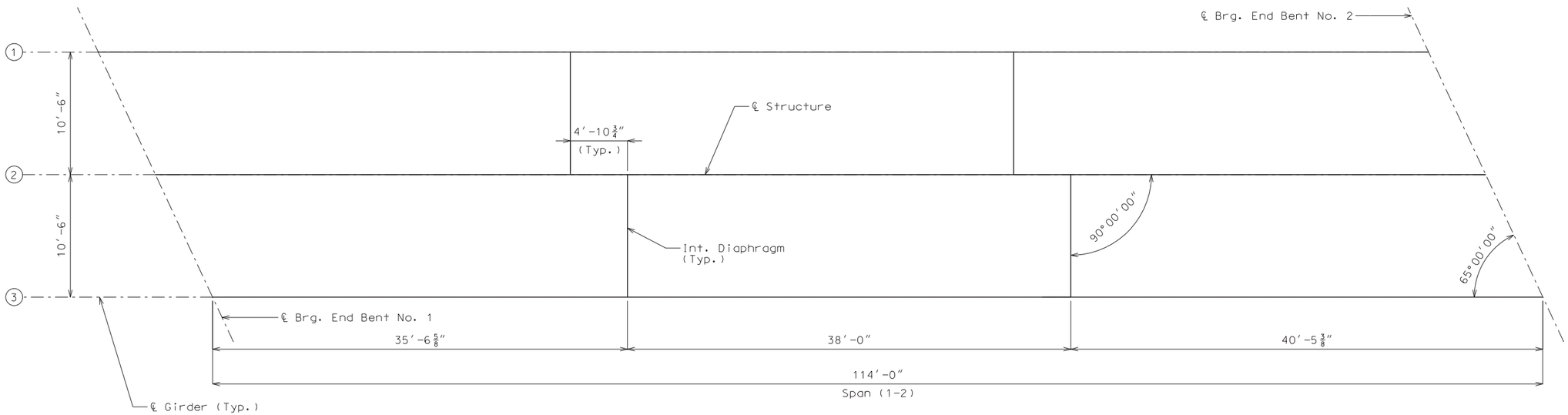

PLAN SHOWING LOCATION OF STEEL INTERMEDIATE DIAPHRAGMS

Note: Longitudinal dimensions are horizontal.

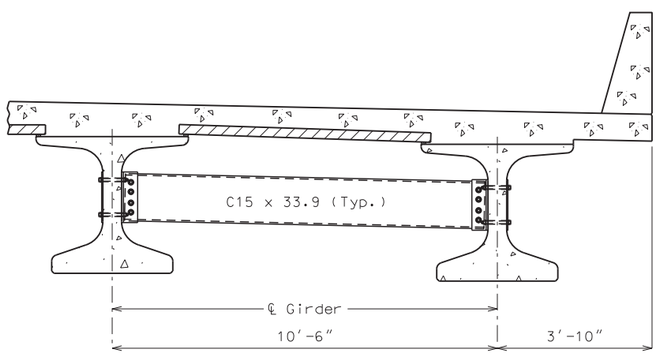

PART SECTION SHOWING
INTERMEDIATE DIAPHRAGMS

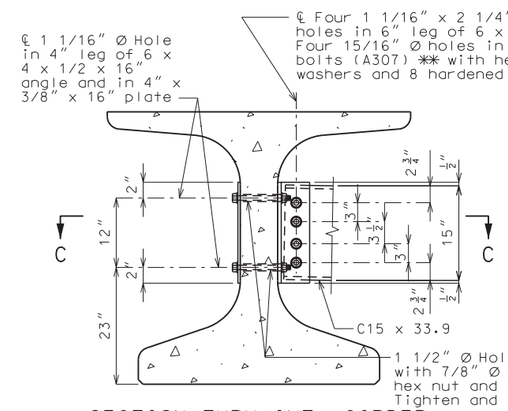

SECTION THRU INT. GIRDER
AT DIAPHRAGM

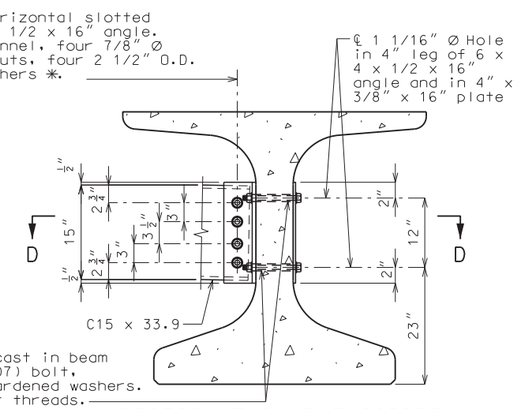

SECTION THRU EXT.GIRDER
AT DIAPHRAGM

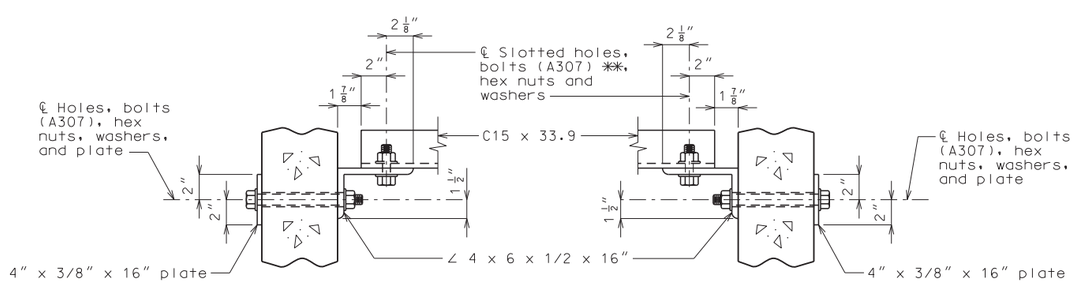

SECTION C-C

SECTION D-D

STEEL DIAPHRAGM NOTES:

✱ In lieu of 2 1/2″ outside diameter washers, contractor may substitute a 3/16″ (Min. thickness) plate with four 15/16″ Ø holes and one hardened washer per bolt.

✱✱ Bolts shall be tightened to provide a tension of one-half that specified in Sec 712 for high strength bolt installation. A325 bolts may be substituted for and installed in accordance with the requirements for the specified A307 bolts.

All diaphragm materials including bolts, nuts, and washers shall be galvanized.

Fabricated structural steel shall be ASTM A709 Grade 36 except as noted.

Payment for furnishing and installing steel intermediate diaphragms will be considered completely covered by the contract unit price for Steel Intermediate Diaphragm for P/S Concrete Girders.

Shop drawings will not be required for steel intermediate diaphragms and angle connections.

STEEL INTERMEDIATE DIAPHRAGM DETAILS

Detailed Jan 2020
Checked Jan 2020

Note: This drawing is not to scale. Follow dimensions.

STATE OF MISSOURI
MARK EUGENE DOERFLINGER
NUMBER E-26002
REGISTERED PROFESSIONAL ENGINEER
THIS SHEET WAS NOT SIGNED, SEALED AND DATED ELECTRONICALLY.

DATE PREPARED	6/11/2020
ROUTE	123
STATE	MO
DISTRICT	BR
SHEET NO.	12
COUNTY	POLK
JOB NO.	J7S3205
CONTRACT ID.	
PROJECT NO.	
BRIDGE NO.	A8871

DATE	DESCRIPTION

MISSOURI HIGHWAYS AND TRANSPORTATION COMMISSION
105 WEST CAPITOL
JEFFERSON CITY, MO 65102
1-888-ASK-MODOT (1-888-275-6636)

1411 East 104th St.
Kansas City, MO 64131
Tel (816) 874-4655
Fax (816) 874-4675
www.trekkdesigngroup.com
Missouri Cert. of Authority 2002010300
TREKK DESIGN GROUP, LLC

IF A SEAL IS PRESENT ON THIS SHEET IT HAS BEEN ELECTRONICALLY SEALED AND DATED.

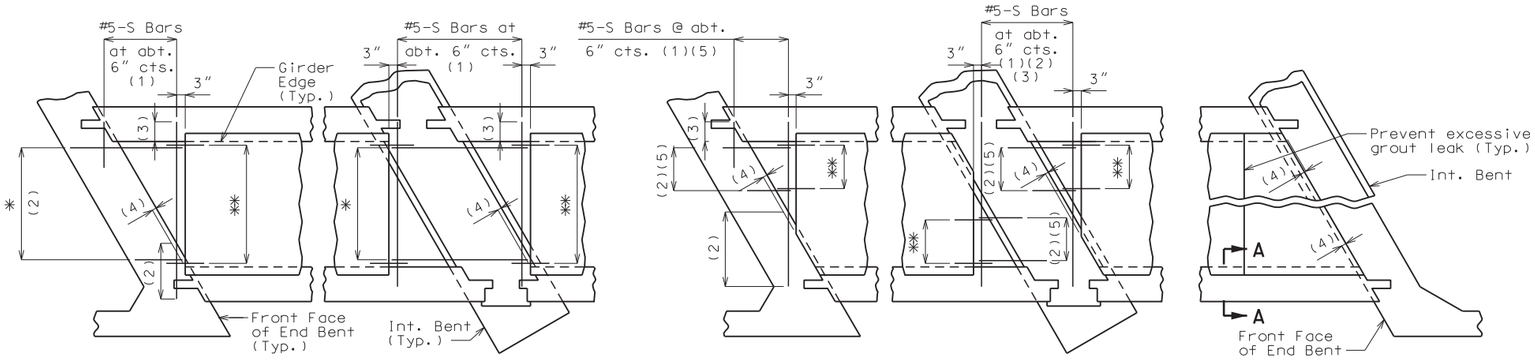

SQUARED END PANELS OR TRUNCATED END PANELS

PLAN SHOWING PANELS PLACEMENT

✱ #5-S Bars at abt. 9" cts. (1)
✱✱ #3-P1 at 12" cts. (End panels only)

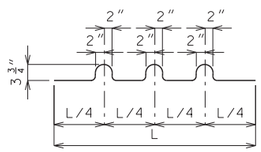

BENDING DIAGRAM FOR U1 BAR

U1 Bars may be oriented at right angles to location and spacing shown. U1 Bars shall be placed between P1 bars.

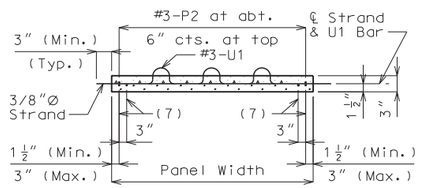

SECTION B-B

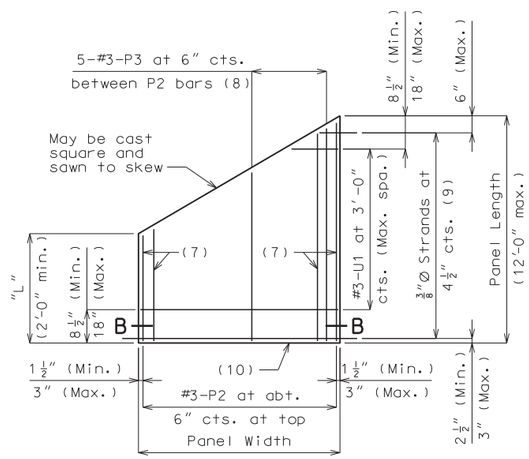

PLAN OF OPTIONAL SKEWED END PANEL

SKEWED END PANELS

Joint Filler Dimensions		
Width	Height	
	Min.	Max.
3"	1"	4"

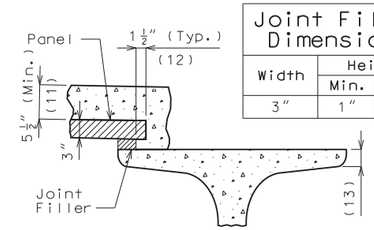

SECTION A-A

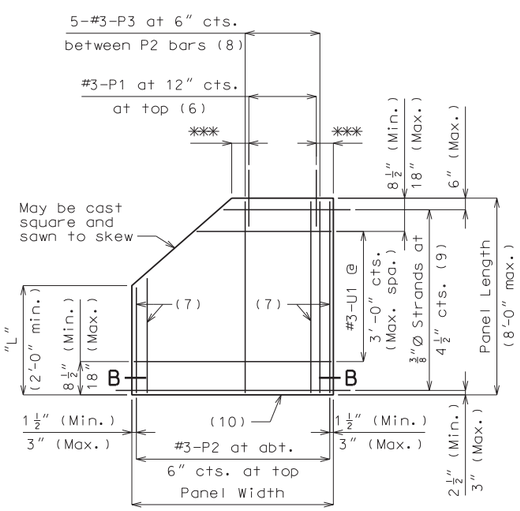

PLAN OF OPTIONAL TRUNCATED END PANEL

✱✱✱ 3" (Min.), 6" (Max.)

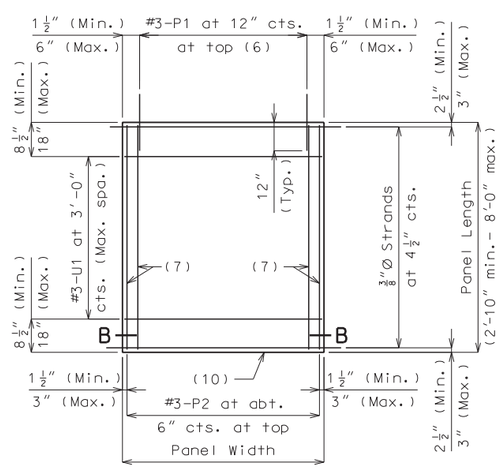

PLAN OF SQUARED PANEL

General Notes:

Prestressed Panels:

Concrete for prestressed panels shall be Class A-1 with f'c = 6,000 psi, f'ci = 4,000 psi.

The top surface of all panels shall receive a scored finish with a depth of scoring of 1/8" perpendicular to the prestressing strands in the panels.

Prestressing tendons shall be high-tensile strength, uncoated, seven-wire, low-relaxation strands for prestressed concrete in accordance with AASHTO M 203 Grade 270, with nominal diameter of strand = 3/8" and nominal area = 0.085 sq.in. and minimum ultimate strength = 22.95 kips (270 ksi). Larger strands may be used with the same spacing and initial tension.

Initial prestressing force = 17.2 kips/strand.

The method and sequence of releasing the strands shall be shown on the shop drawings.

Suitable anchorage devices for lifting panels may be cast in panels, provided the devices are shown on the shop drawings and approved by the engineer. Panel lengths shall be determined by the contractor and shown on the shop drawings.

When squared end panels are used at skewed bents, the skewed portion shall be cast full depth. No separate payment will be made for additional concrete and reinforcing required.

Support from diaphragm forms is required under the optional skewed end until cast-in-place concrete has reached 3,000 psi compressive strength.

Prestressed panels shall be brought to saturated surface-dry (SSD) condition just prior to the deck pour. There shall be no free standing water on the panels or in the area to be cast.

The prestressed panel quantities are not included in the table of estimated quantities for the slab.

Reinforcing Steel:

All dimensions are out to out.

Hooks and bends shall be in accordance with the CRSI Manual of Standard Practice for Detailing Reinforced Concrete Structures, Stirrup and Tie Dimensions.

Minimum clearance to reinforcing steel shall be 1 1/2", unless otherwise shown.

If U1 bars interfere with placement of slab steel, U1 loops may be bent over, as necessary, to clear slab steel.

Deformed welded wire reinforcement (WWR) providing a minimum area of reinforcing perpendicular to strands of 0.22 sq in./ft. with spacing parallel to strands sufficient to ensure proper handling, may be used in lieu of the #3-P2 bars shown. Wire diameter shall not be larger than 0.375 inch. The above alternative reinforcement criteria may be used in lieu of the #3-P3 bars, when required, and placed over a width not less than 2 feet.

The following reinforcing steel shall be tied securely to the strands with the following maximum spacing in each direction:
#3-P2 bars at 16 inches.
WWR at 24 inches.

The #3-U1 bars shall be tied securely to #3-P2 bars, to WWR or to strands (when placed between P1 bars) at about 3-foot centers.

Minimum reinforcement steel length shall be 2'-0".

All reinforcement other than prestressing strands shall be epoxy coated.

Precast panels may be in contact with stirrup reinforcing in diaphragms.

S-bars are not listed in the bill of reinforcing.

Cost of S-bars will be considered completely covered by the contract unit price for the slab.

Joint Filler:

Joint filler shall be preformed fiber expansion joint material in accordance with Sec 1057 or expanded or extruded polystyrene bedding material in accordance with Sec 1073.

Use Slab Haunching Diagram on Sheet No. 14 for determining thickness of joint filler within the limits noted in the table of Joint Filler Dimensions.

Thicker material may be used on one or both sides of the girder to reduce cast-in-place concrete thickness to within tolerances.

The same thickness of preformed fiber expansion joint material shall be used under any one edge of any panel except at locations where top flange thickness may be stepped. The maximum change in thickness between adjacent panels shall be 1/4 inch. The polystyrene bedding material may be cut with a transition to match haunch height above top of flange.

Joint filler shall be glued to the girder. When thickness exceeds 1 1/2 inches, the joint filler shall be glued top and bottom. The glue used shall be the type recommended by the joint filler manufacturer.

Edges of panels shall be uniformly seated on the joint filler before slab reinforcement is placed.

Reference Notes:

Plan of Panels Placement:

(1) S-bars shown are bottom steel in slab between panels and used with squared and truncated end panels only.

(2) Extend S-bars 18 inches beyond the front face of end bents and int. bents for squared and truncated end panels only.

(3) Extend S-bars 9 inches beyond edge of girder (Typ.).

(4) End panels shall be dimensioned 1/2" min. to 1 1/2" max. from the inside face of diaphragm.

(5) For truncated end panels, use a min. of #5-S bars at 6" crossings in openings, or min. 4x4-W7xW7.

Plans of Panels:

(6) For end panels only, P1 bars shall be 2'-0" in length and embedded 12". P1 bars will not be required for panels at squared integral end bents.

(7) #3-P2 bars near edge of panel at bottom (under strands).

(8) Use #3-P3 bars if panel is skewed 45° or greater.

(9) Any strand 2'-0" or shorter shall have a #4 reinforcing bar on each side of it, centered between strands. Strands 2'-0" or shorter may then be debonded at the fabricator's option.

(10) Optional 1/2" x 45° Chamfer one or both sides at bottom.

Section A-A:

(11) Slab thickness over prestressed panels varies due to girder camber. In order to maintain minimum slab thickness, it may be necessary to raise the grade uniformly throughout the structure. No payment will be made for additional labor or materials required for necessary grade adjustment.

(12) Contractor shall ensure proper consolidation under and between panels.

(13) At the contractor's option, the variation in slab thickness over prestressed panels may be eliminated or reduced by increasing and varying the girder top flange thickness. Dimensions shall be shown on the shop drawings.

DETAILS OF PRESTRESSED PANELS

Detailed Jan 2020
Checked Jan 2020

Note: This drawing is not to scale. Follow dimensions.

STATE OF MISSOURI
MARK EUGENE DOERFLINGER
NUMBER E-26002
REGISTERED PROFESSIONAL ENGINEER
THIS SHEET HAS BEEN SIGNED, SEALED AND DATED ELECTRONICALLY.

DATE PREPARED	
6/11/2020	
ROUTE	STATE
123	MO
DISTRICT	SHEET NO.
BR	13
COUNTY	
POLK	
JOB NO.	
J7S3205	
CONTRACT ID.	
PROJECT NO.	
BRIDGE NO.	
A8871	

DATE	DESCRIPTION

IF A SEAL IS PRESENT ON THIS SHEET IT HAS BEEN ELECTRONICALLY SEALED AND DATED.

MISSOURI HIGHWAYS AND TRANSPORTATION COMMISSION
105 WEST CAPITOL
JEFFERSON CITY, MO 65102
1-888-ASK-MODOT (1-888-275-6636)

TREKK DESIGN GROUP, LLC
1411 East 104th St.
Kansas City, MO 64131
Tel (816) 874-4655
Fax (816) 874-4675
www.trekkdesigngroup.com
Missouri Cert. of Authority 2002010300

Theoretical Bottom of Slab Elevations at Centerline of Girder (Prior to forming for slab) (Estimated at 90 days)											
Girder Number	Span (1-2) (114'-0" ℄ Brg. - ℄ Brg.)										
	℄ Brg.	.10	.20	.30	.40	.50	.60	.70	.80	.90	℄ Brg.
1	942.78	942.43	942.07	941.69	941.29	940.87	940.43	939.96	939.47	938.96	938.45
2	942.81	942.46	942.11	941.74	941.34	940.92	940.48	940.00	939.51	939.00	938.48
3	942.41	942.06	941.70	941.32	940.92	940.50	940.05	939.58	939.10	938.59	938.08

Elevations are based on a constant slab thickness of 8 1/2" and include allowance for theoretical dead load deflections due to weight of slab (including precast panel) and barrier curb.

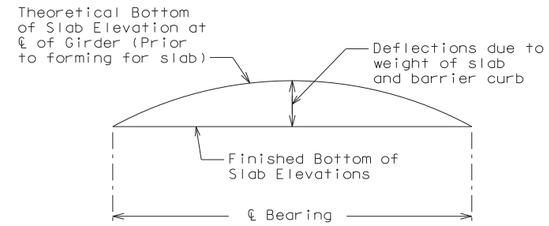

TYPICAL SLAB ELEVATIONS DIAGRAM

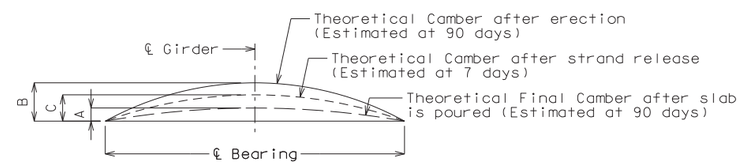

Girder	Span (1-2)		
	A	B	C
Exterior	3"	6"	3 3/8"
Interior	2 5/8"		

GIRDER CAMBER DIAGRAM

Conversion Factors for Girder Camber (Estimated at 90 days):

0.1 pt. = 0.314 x 0.5 pt.
0.2 pt. = 0.593 x 0.5 pt.
0.3 pt. = 0.813 x 0.5 pt.
0.4 pt. = 0.952 x 0.5 pt.

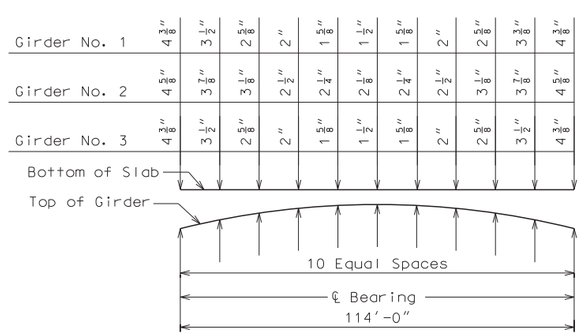

Span (1-2)

THEORETICAL SLAB HAUNCHING DIAGRAM (ESTIMATED AT 90 DAYS)

If girder camber is different from that shown in the camber diagram, in order to maintain minimum slab thickness, an adjustment of the slab haunches, an increase in slab thickness or a raise in grade uniformly throughout the structure shall be necessary. No payment will be made for additional labor or materials required for variation in haunching, slab thickness or grade adjustment.

Concrete in the slab haunches is included in the Estimated Quantities for Slab on Concrete.

Detailed Jan 2020
Checked Jan 2020

Note: This drawing is not to scale. Follow dimensions.

STATE OF MISSOURI
MARK EUGENE DOERFLINGER
NUMBER E-26002
REGISTERED PROFESSIONAL ENGINEER
THIS SHEET HAS BEEN SIGNED, SEALED AND DATED ELECTRONICALLY.

DATE PREPARED	6/11/2020
ROUTE	123
STATE	MO
DISTRICT	BR
SHEET NO.	14
COUNTY	POLK
JOB NO.	J7S3205
CONTRACT ID.	
PROJECT NO.	
BRIDGE NO.	A8871

DATE	DESCRIPTION

IF A SEAL IS PRESENT ON THIS SHEET IT HAS BEEN ELECTRONICALLY SEALED AND DATED.

MISSOURI HIGHWAYS AND TRANSPORTATION COMMISSION
105 WEST CAPITOL
JEFFERSON CITY, MO 65102
1-888-ASK-MODOT (1-888-275-6636)

TREKK DESIGN GROUP, LLC
1411 East 104th St.
Kansas City, MO 64131
Tel (816) 874-4631
Fax (816) 874-4675
www.trekkdesigngroup.com
Missouri Cert. of Authority 2002010300

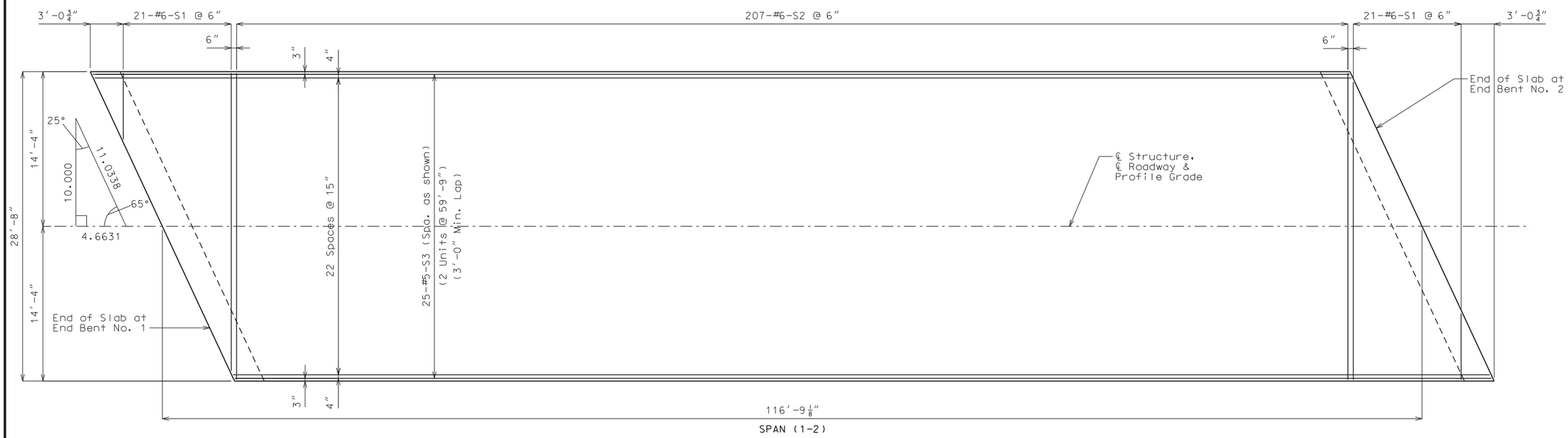

PLAN OF SLAB SHOWING TOP REINFORCEMENT

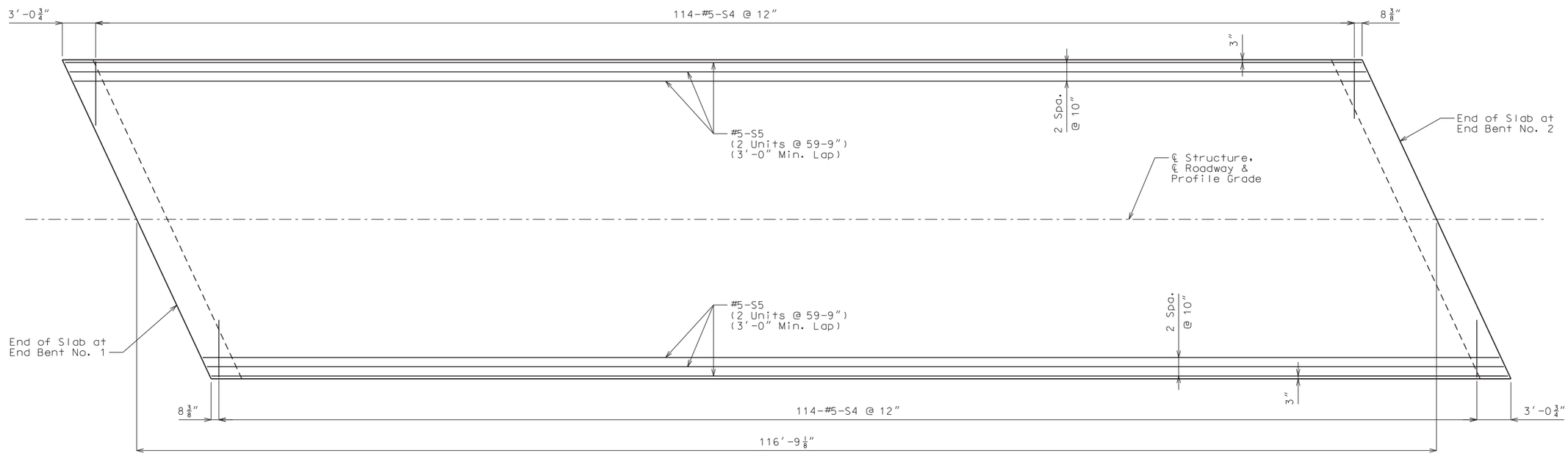

PLAN OF SLAB SHOWING BOTTOM REINFORCEMENT

PLAN OF SLAB SHOWING REINFORCEMENT

Notes:

Longitudinal dimensions shown are horizontal.

For Details of Precast Prestressed Panels, see Sheet No. 13.

For Theoretical Bottom of Slab Elevations, Girder Camber Diagrams and Theoretical Slab Haunching Diagram, see Sheet No. 14.

For Section Thru Slab, see Sheet No. 16.

For Details and Reinforcement of Barrier Curb not shown, see Sheets No. 17 thru 19.

Detailed Jan 2020
Checked Jan 2020

Note: This drawing is not to scale. Follow dimensions.

STATE OF MISSOURI
MARK EUGENE DOERFLINGER
NUMBER E-26002
REGISTERED PROFESSIONAL ENGINEER
THIS SHEET HAS BEEN SIGNED, SEALED AND DATED ELECTRONICALLY.

DATE PREPARED	6/11/2020
ROUTE	123
STATE	MO
DISTRICT	BR
SHEET NO.	15
COUNTY	POLK
JOB NO.	J7S3205
CONTRACT ID.	
PROJECT NO.	
BRIDGE NO.	A8871

DESCRIPTION

DATE

MISSOURI HIGHWAYS AND TRANSPORTATION COMMISSION

105 WEST CAPITOL
JEFFERSON CITY, MO 65102
1-888-ASK-MODOT (1-888-275-6636)

1411 East 104th St.
Kansas City, MO 64131
Tel (816) 874-4655
Fax (816) 874-4675
www.trekkdesigngroup.com

Missouri Cert. of Authority 2002010300

TREKK DESIGN GROUP, LLC

IF A SEAL IS PRESENT ON THIS SHEET IT HAS BEEN ELECTRONICALLY SEALED AND DATED.

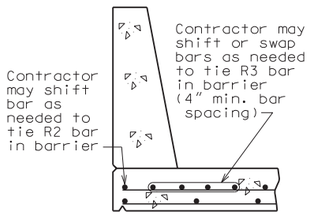

OPTIONAL SHIFTING TOP BARS AT BARRIER

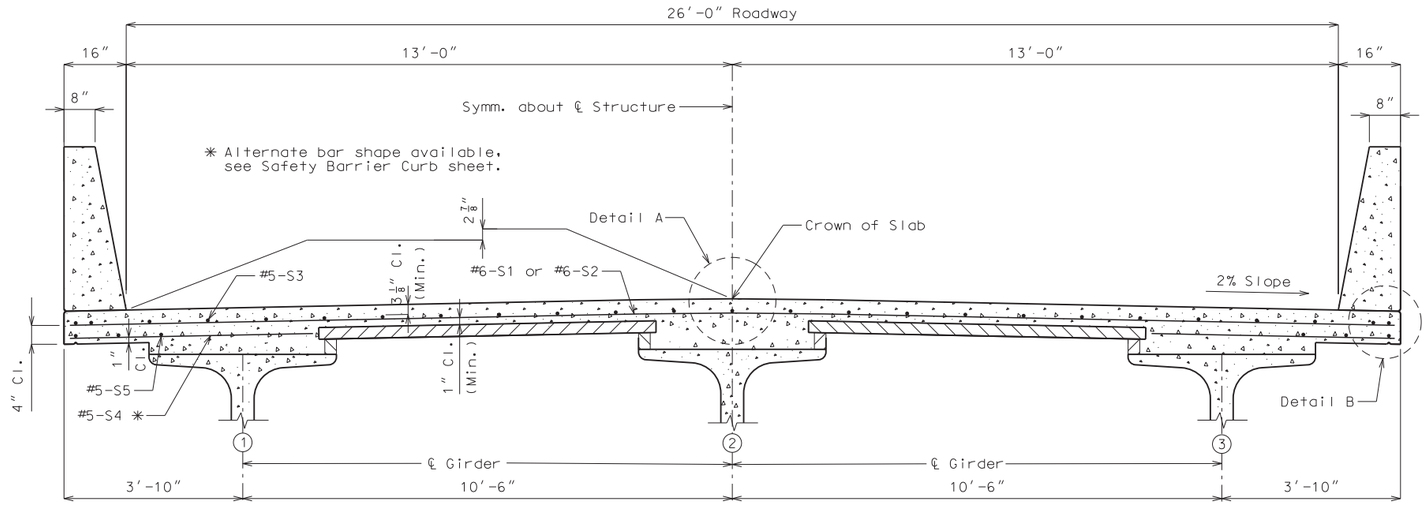

SECTION THRU SLAB

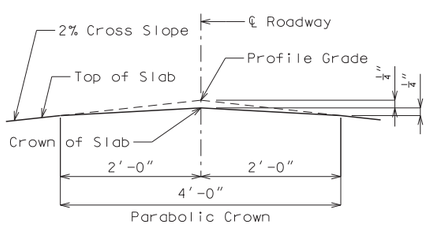

DETAIL A

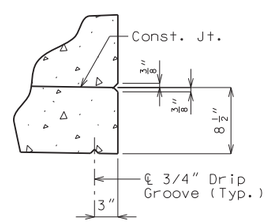

DETAIL B

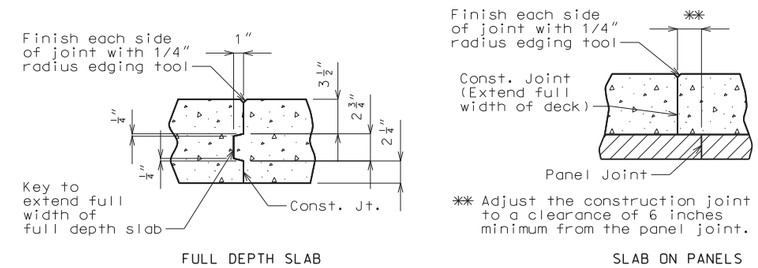

SLAB CONSTRUCTION JOINT

Notes:
The contractor shall furnish an approved retarder to retard the set of the concrete to 2.5 hours and shall pour and satisfactorily finish the slab pours at not less than 25 cubic yards per hour.

The concrete diaphragm at the integral end bents shall be poured a minimum of 30 minutes and a maximum of 2 hours before the slab is poured.

For details of precast prestressed panels, see Sheet No. 13.

For Theoretical Bottom of Slab Elevations, Girder Camber Diagram and Theoretical Slab Haunching Diagram, see Sheet No. 14.

For Plan of Slab Showing Reinforcement, see Sheet No. 15.

For reinforcement of barrier curb not shown, see Sheets No. 17 thru 19.

SLAB DETAILS

Detailed Jan 2020
Checked Jan 2020

Note: This drawing is not to scale. Follow dimensions.

STATE OF MISSOURI
MARK EUGENE DOERFLINGER
NUMBER E-26002
REGISTERED PROFESSIONAL ENGINEER
THIS SHEET HAS BEEN SIGNED, SEALED AND DATED ELECTRONICALLY.

DATE PREPARED	6/11/2020
ROUTE	123
STATE	MO
DISTRICT	BR
SHEET NO.	16
COUNTY	POLK
JOB NO.	J7S3205
CONTRACT ID.	
PROJECT NO.	
BRIDGE NO.	A8871

DESCRIPTION

DATE

MISSOURI HIGHWAYS AND TRANSPORTATION COMMISSION
105 WEST CAPITOL
JEFFERSON CITY, MO 65102
1-888-ASK-MODOT (1-888-275-6636)

5411 East 18th St.
Kansas City, MO 64127
Tel (816) 874-4851
Fax (816) 874-4855
www.trekdesigngroup.com

Missouri Cert. of Authority 2002010300

TREKK DESIGN GROUP, LLC

IF A SEAL IS PRESENT ON THIS SHEET IT HAS BEEN ELECTRONICALLY SEALED AND DATED.

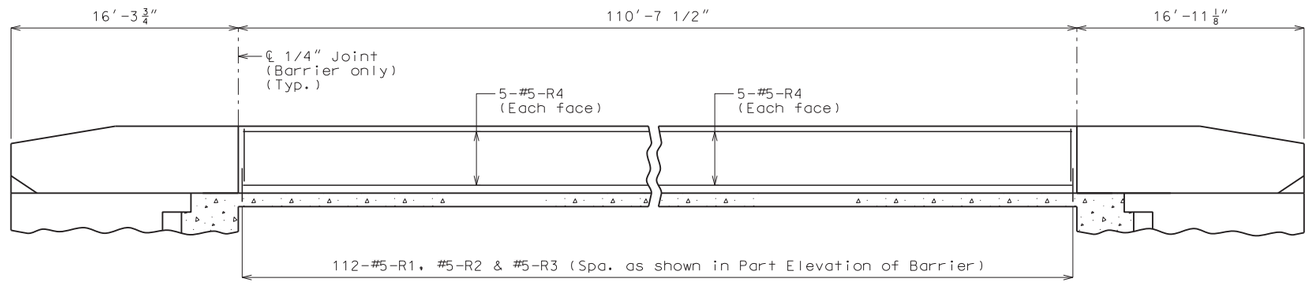

ELEVATION OF BARRIER

(Left barrier shown, right barrier similar)

Longitudinal dimensions are horizontal.

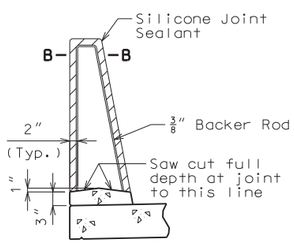

SECTION THRU
SAW CUT JOINT

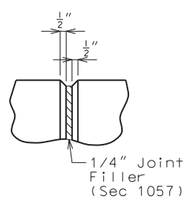

PART ELEVATION
AT FORMED JOINT

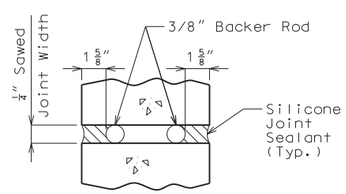

SECTION B-B

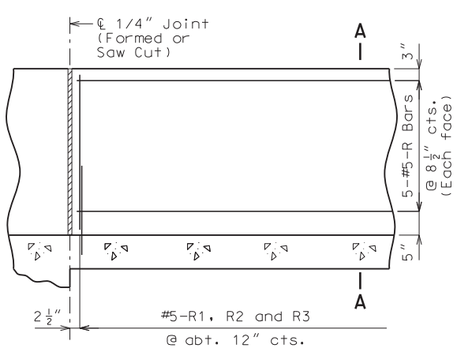

PART ELEVATION OF BARRIER

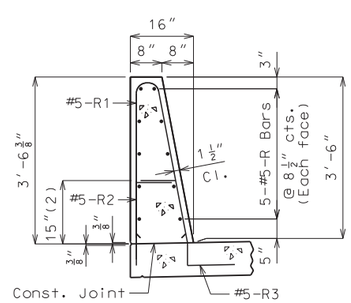

SECTION A-A

Use a minimum lap of 3′-1″ for #5 horizontal barrier bars.

The cross-sectional area above the slab is 3.52 square feet.

(2) To top of bar

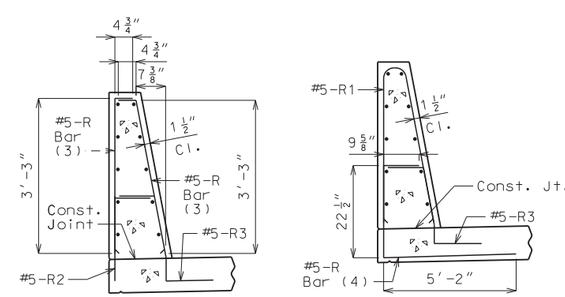

R-BAR PERMISSIBLE ALTERNATE SHAPE

(3) The R1 bar may be separated into two bars as shown, at the contractor's option, only when slip forming is not used. (All dimensions are out to out.)

(4) The R2 bar and #5 bottom transverse slab bar in cantilever (prestressed panels only) combination may be furnished as one bar as shown, at the contractor's option.

General Notes:

Conventional forming or slip forming may be used. Saw cut joints may be used with conventional forming.

Top of barrier shall be built parallel to grade and barrier joints (except at end bents) normal to grade.

All exposed edges of barrier shall have either a 1/2-inch radius or a 3/8-inch bevel, unless otherwise noted.

Payment for all concrete and reinforcement, complete in place, will be considered completely covered by the contract unit price for Type D Barrier per linear foot.

Concrete in barrier shall be Class B-1.

Measurement of barrier is to the nearest linear foot for each structure, measured along the outside top of slab from end of wing to end of wing.

Concrete traffic barrier delineators shall be placed on top of the barrier as shown on Missouri Standard Plan 617.10 and in accordance with Sec 617. Delineators on bridges with two-lane, two-way traffic shall have retroreflective sheeting on both sides. Concrete traffic barrier delineators will be considered completely covered by the contract unit price for Type D Barrier.

Joint sealant and backer rods shall be in accordance with Sec 717 for silicone joint sealant for saw cut and formed joints.

For additional bars required for slip-formed option, see sheet no. 19.

CONVENTIONAL-FORMED TYPE D BARRIER

Detailed Jan 2020
Checked Jan 2020

Note: This drawing is not to scale. Follow dimensions.

STATE OF MISSOURI
MARK EUGENE DOERFLINGER
NUMBER E-26002
REGISTERED PROFESSIONAL ENGINEER
THIS SHEET HAS BEEN SIGNED, SEALED AND DATED ELECTRONICALLY.

DATE PREPARED	7/7/2020
ROUTE	123
STATE	MO
DISTRICT	BR
SHEET NO.	17
COUNTY	POLK
JOB NO.	J7S3205
CONTRACT ID.	
PROJECT NO.	
BRIDGE NO.	A8871

DATE	DESCRIPTION

IF A SEAL IS PRESENT ON THIS SHEET IT HAS BEEN ELECTRONICALLY SEALED AND DATED.

MISSOURI HIGHWAYS AND TRANSPORTATION COMMISSION
105 WEST CAPITOL
JEFFERSON CITY, MO 65102
1-888-ASK-MODOT (1-888-275-6636)

1411 East 104th St.
Kansas City, MO 64131
Tel (816) 874-4655
Fax (816) 874-4675
www.trekkdesigngroup.com
TREKK DESIGN GROUP, LLC
Missouri Cert. of Authority 2002010300

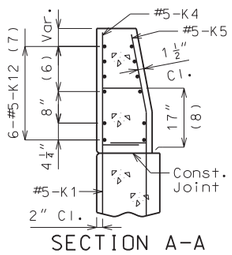

SECTION A-A

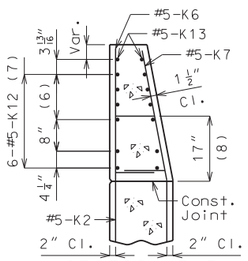

SECTION B-B

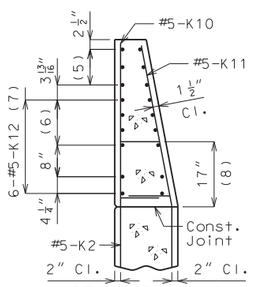

SECTION C-C

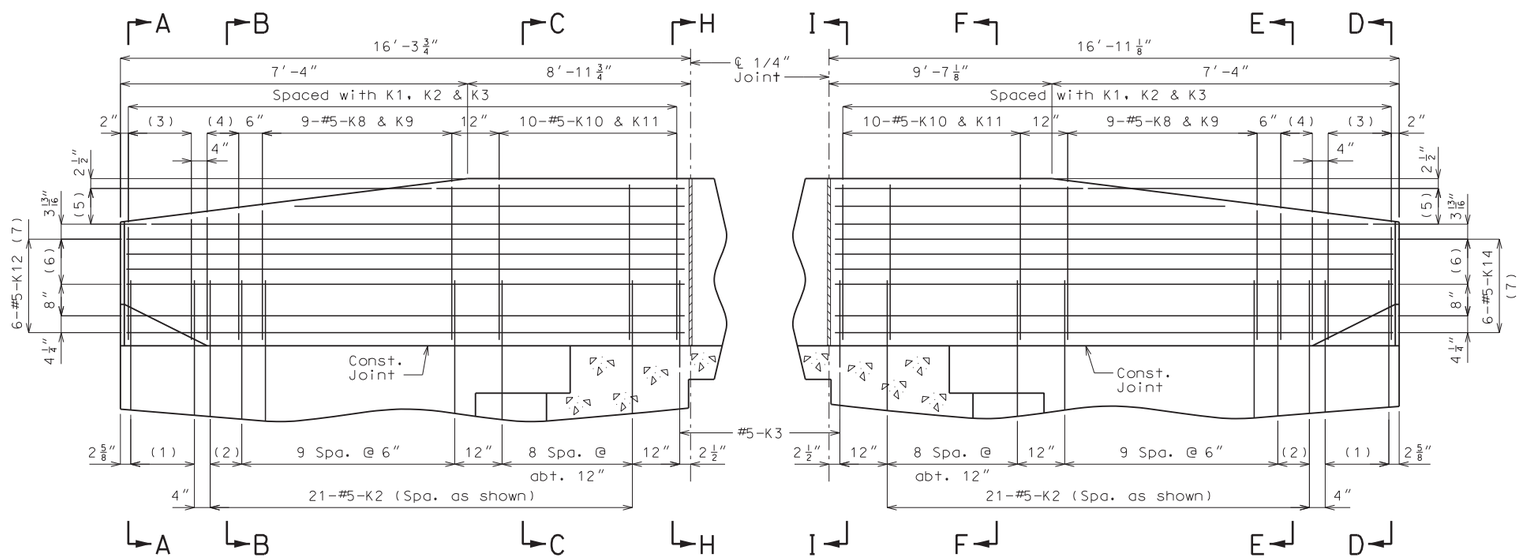

PART ELEVATION

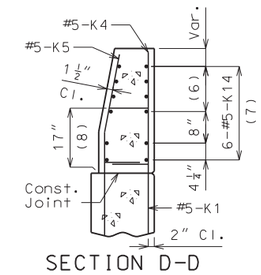

SECTION D-D

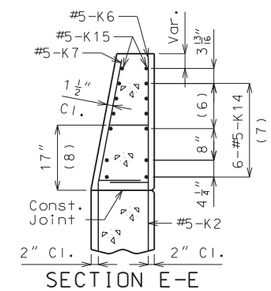

SECTION E-E

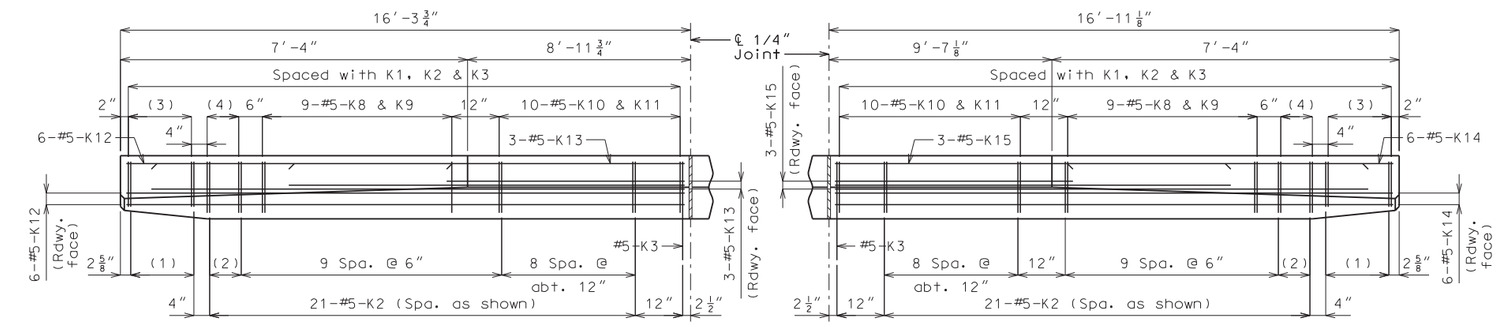

PART PLAN

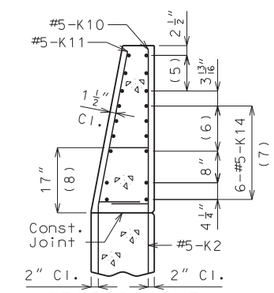

SECTION F-F

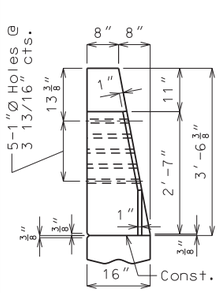

ELEVATION G-G

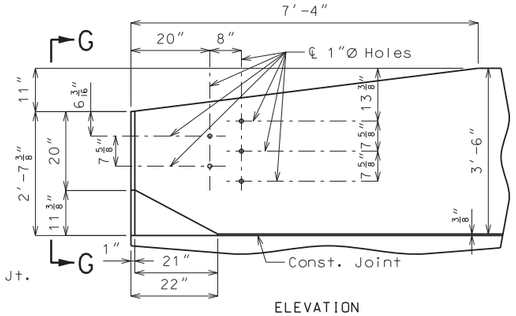

ELEVATION

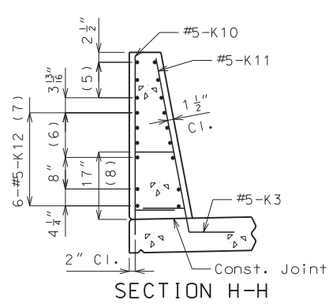

SECTION H-H

(1) 5-#5-K1 @ 4" cts.

(2) 2 spaces @ 4"

(3) 5-#5-K4 & K5

(4) 3-#5-K6 & K7

(5) 3-#5-K13 or K15 @ 4 1/2" cts., each face

(6) 3 spaces @ 3 13/16"

(7) Spaced as shown, each face

(8) To top of bar

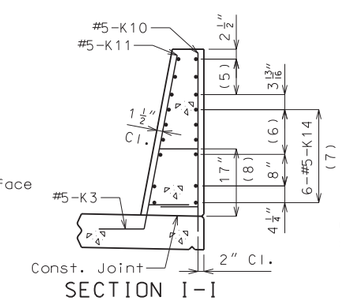

SECTION I-I

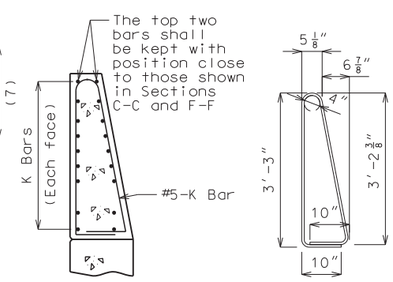

K10-K11 BAR PERMISSIBLE ALTERNATE SHAPE

(Other K bars not shown for clarity)

The K10-K11 bar combination may be furnished as one bar as shown, at the contractor's option.

✳ Transition to zero at Type A curb for gutter lines to match.

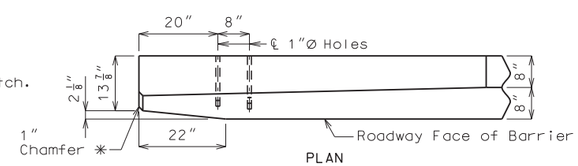

PLAN

DETAILS OF GUARD RAIL ATTACHMENT

General Notes:

Concrete traffic barrier delineators shall be placed on top of the barrier as shown on Missouri Standard Plan 617.10 and in accordance with Sec 617. Delineators on bridges with two-lane, two-way traffic shall have retroreflective sheeting on both sides. Concrete traffic barrier delineators will be considered completely covered by the contract unit price for Type D Barrier.

Reinforcing Steel:

Minimum clearance to reinforcing steel shall be 1 1/2" except as shown for bars embedded into end bent.

TYPE D BARRIER AT END BENTS

(Left barrier shown, right barrier similar)

Detailed Jan 2020
Checked Jan 2020

Note: This drawing is not to scale. Follow dimensions.

STATE OF MISSOURI
MARK EUGENE DOERFLINGER
NUMBER E-26002
REGISTERED PROFESSIONAL ENGINEER
THIS SHEET WAS BEING SIGNED, SEALED AND DATED ELECTRONICALLY.

DATE PREPARED	7/7/2020
ROUTE	123
STATE	MO
DISTRICT	BR
SHEET NO.	18
COUNTY	POLK
JOB NO.	J7S3205
CONTRACT ID.	
PROJECT NO.	
BRIDGE NO.	A8871

DATE	DESCRIPTION

IF A SEAL IS PRESENT ON THIS SHEET IT HAS BEEN ELECTRONICALLY SEALED AND DATED.

MISSOURI HIGHWAYS AND TRANSPORTATION COMMISSION
105 WEST CAPITOL
JEFFERSON CITY, MO 65102
1-888-ASK-MODOT (1-888-275-6636)

TREKK DESIGN GROUP, LLC
1411 East 104th St.
Kansas City, MO 64131
Tel (816) 874-4655
Fax (816) 874-4675
www.trekkdesigngroup.com
Missouri Cert. of Authority 2002010300

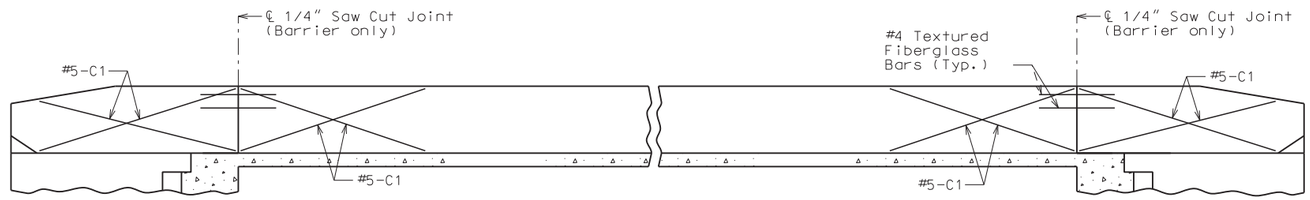

ELEVATION OF BARRIER

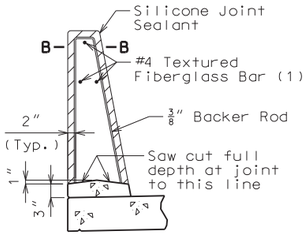

SECTION THRU
SAW CUT JOINT

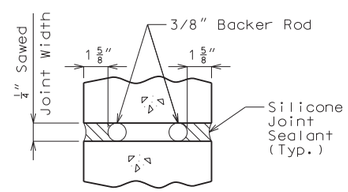

SECTION B-B

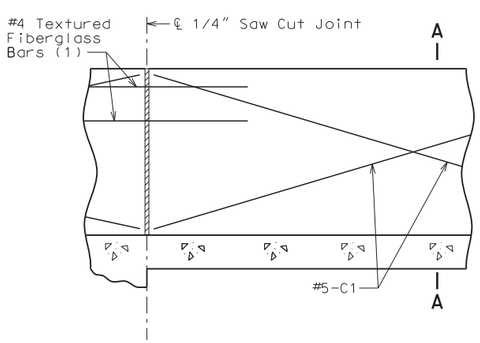

PART ELEVATION OF BARRIER

(1) Four feet long, centered on joint, slip-formed option only

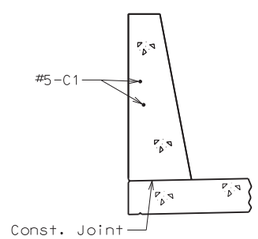

SECTION A-A

General Notes:

Use R bars and K bars similarly as shown for conventional-formed barrier.

Top of barrier shall be built parallel to grade and barrier joints (except at end bents) normal to grade.

All exposed edges of barrier shall have either a 1/2-inch radius or a 3/8-inch bevel, unless otherwise noted.

Payment for all concrete and reinforcement, complete in place, will be considered completely covered by the contract unit price for Type D Barrier per linear foot.

Concrete in barrier shall be Class B-1.

Measurement of barrier is to the nearest linear foot for each structure, measured along the outside top of slab from end of wing to end of wing.

Concrete traffic barrier delineators shall be placed on top of the barrier as shown on Missouri Standard Plan 617.10 and in accordance with Sec 617. Delineators on bridges with two-lane, two-way traffic shall have retroreflective sheeting on both sides. Concrete traffic barrier delineators will be considered completely covered by the contract unit price for Type D Barrier.

Joint sealant and backer rods shall be in accordance with Sec 717 for silicone joint sealant for saw cut and formed joints.

For slip-formed option, both sides of barrier shall have a vertically broomed finish and the top shall have a transversely broomed finish.

SLIP-FORMED TYPE D BARRIER

Detailed Jan 2020
Checked Jan 2020

Note: This drawing is not to scale. Follow dimensions.

STATE OF MISSOURI
MARK EUGENE DOERFLINGER
NUMBER E-26002
REGISTERED PROFESSIONAL ENGINEER
THIS SHEET WAS SIGNED, SEALED AND DATED ELECTRONICALLY.

DATE PREPARED	7/7/2020
ROUTE	123
STATE	MO
DISTRICT	BR
SHEET NO.	19
COUNTY	POLK
JOB NO.	J7S3205
CONTRACT ID.	
PROJECT NO.	
BRIDGE NO.	A8871

DATE	DESCRIPTION

MISSOURI HIGHWAYS AND TRANSPORTATION COMMISSION
105 WEST CAPITOL
JEFFERSON CITY, MO 65102
1-888-ASK-MODOT (1-888-275-6636)

TREKK DESIGN GROUP, LLC
1411 East 104th St.
Kansas City, MO 64131
Tel (816) 874-4655
Fax (816) 874-4675
www.trekkdesigngroup.com
Missouri Cert. of Authority 2002010300

IF A SEAL IS PRESENT ON THIS SHEET IT HAS BEEN ELECTRONICALLY SEALED AND DATED.

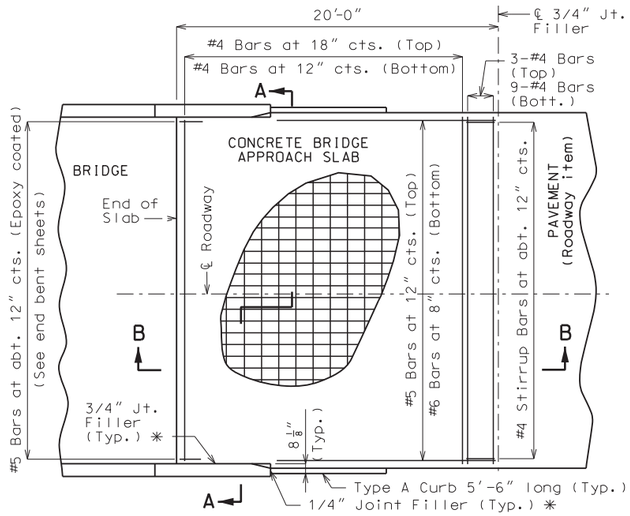

PART PLAN OF SQUARED STRUCTURE

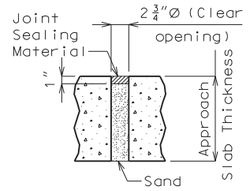

UNDERSEAL ACCESS HOLE DETAIL

(If required)

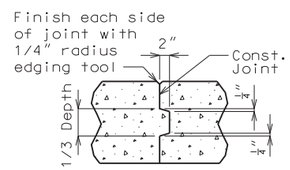

CONCRETE CONST. JOINT DETAIL

(If required)

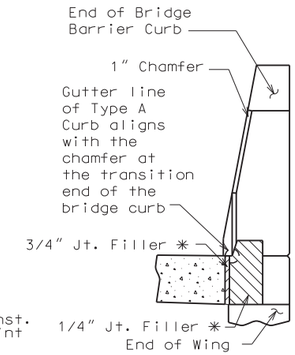

4" TYPE A CURB

Notes For Concrete Slab Only:

All concrete for the bridge approach slab shall be in accordance with Sec 503 (f'c = 4,000 psi).

The reinforcing steel in the bridge approach slab shall be epoxy coated Grade 60 with fy = 60,000 psi.

Longitudinal construction joints in bridge approach slab shall be aligned with longitudinal construction joints in bridge slab.

Minimum clearance to reinforcing steel shall be 1 1/2", unless otherwise shown.

The reinforcing steel in the bridge approach slab shall be continuous. The transverse reinforcing steel may be made continuous by lap splicing the #4 bars 23" or by mechanical bar splice.

Mechanical bar splices shall be in accordance with Sec 710.

All joint filler shall be in accordance with Sec 1057 for preformed fiber expansion joint filler except as noted.

Payment for furnishing all materials, labor and excavation necessary to construct the concrete bridge approach slab, including the timber header, underdrain, Type 5 aggregate base, joint filler, and all other appurtenances and incidental work as shown on this sheet, complete in place, will be considered completely covered by the contract unit price for Bridge Approach Slab (Minor Road) per square yard.

See Missouri Standard Plans Drawing 609.00 for details of Type A Curb.

✱ Seal joint between vertical face of bridge approach slab and wing with "Silicone Joint Sealant for Saw Cut and Formed Joints" in accordance with Sec 717.

General Notes:

Contractor shall have the option to construct either slab except as noted.

The contractor shall pour and satisfactorily finish the bridge slab before placing the bridge approach slab.

Drain pipe may be either 6" diameter corrugated metallic-coated pipe underdrain, 4" diameter corrugated polyvinyl chloride (PVC) drain pipe, or 4" diameter corrugated polyethylene (PE) drain pipe.

MoDOT Construction personnel will indicate the bridge approach slab used for this structure:

☐ Concrete Bridge Approach Slab
☐ Asphalt Bridge Approach Slab

Notes For Asphalt Slab Only:

Payment for furnishing all materials, labor and excavation necessary to construct the asphalt bridge approach slab, including tack, curb, underdrain and Type 5 aggregate base within the pay limits shown, complete in place, will be considered completely covered by the contract unit price for Bridge Approach Slab (Minor Road) per square yard.

Application of tack is required between lifts per Sec 403.

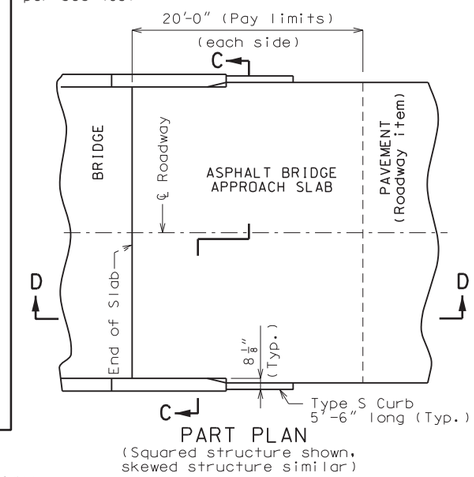

PART PLAN

(Squared structure shown, skewed structure similar)

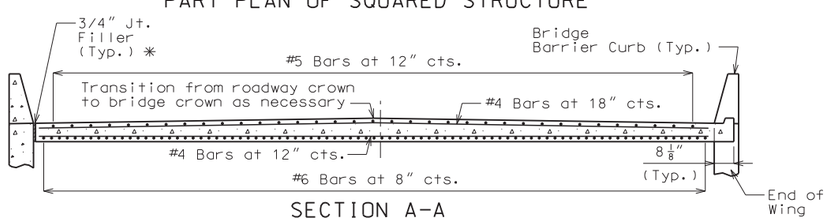

SECTION A-A

With the approval of the engineer, the contractor may crown the bottom of the approach slab to match the crown of the roadway surface.

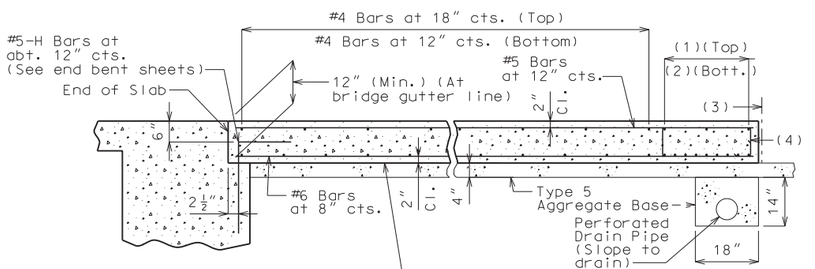

(1) 3-#4 Bars

(2) 9-#4 Bars

(3) ℄ 3/4" Jt. Filler

(4) #4 Stirrup Bars at abt. 12" cts.; 2'-0"x 8" (Min.) out to out; Actual length = 5'-10" (Min.); 90° stirrup hook at bottom; Stirrup height (8") and actual length vary due to crown.

SECTION B-B

(Integral end bent)

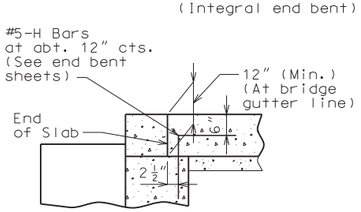

PART SECTION B-B

(Non-integral end bent)

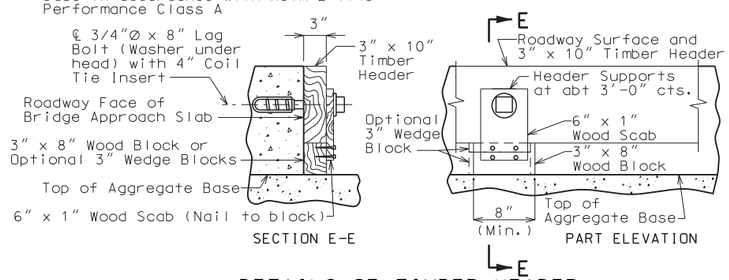

DETAILS OF TIMBER HEADER

Remove timber header when concrete pavement is placed.

OPTIONAL CONCRETE SLAB

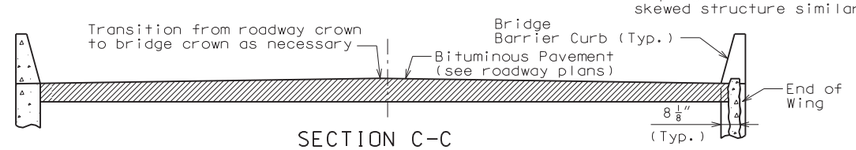

SECTION C-C

With the approval of the engineer, the contractor may crown the bottom of the approach slab to match the crown of the roadway surface.

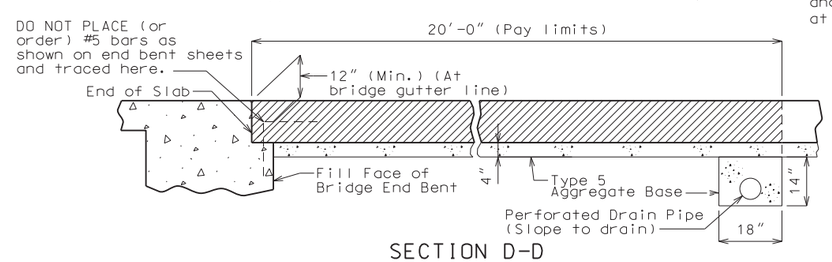

SECTION D-D

OPTIONAL ASPHALT SLAB (NOT ALLOWED WITH CONCRETE PAVEMENT)

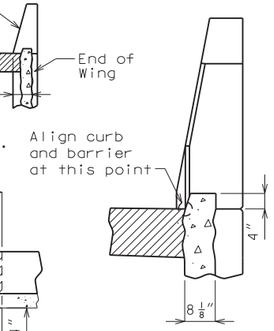

4" TYPE S CURB

See Missouri Standard Plans Drawing 609.00 for details of Type S Curb.

DETAILS OF BRIDGE APPROACH SLAB (MINOR ROAD)

Integral end bents shown, non-integral end bent similar.

Detailed Jan 2020
Checked Jan 2020

Note: This drawing is not to scale. Follow dimensions.

STATE OF MISSOURI
MARK EUGENE DOERFLINGER
NUMBER E-26602
REGISTERED PROFESSIONAL ENGINEER
THIS SHEET HAS BEEN SIGNED, SEALED AND DATED ELECTRONICALLY.

DATE PREPARED	6/11/2020
ROUTE	123
STATE	MO
DISTRICT	BR
SHEET NO.	20
COUNTY	POLK
JOB NO.	J7S3205
CONTRACT ID.	
PROJECT NO.	
BRIDGE NO.	A8871

DATE	DESCRIPTION

MISSOURI HIGHWAYS AND TRANSPORTATION COMMISSION
105 WEST CAPITOL
JEFFERSON CITY, MO 65102
1-888-ASK-MODOT (1-888-275-6636)

TREKK DESIGN GROUP, LLC
1411 East 104th St.
Kansas City, MO 64131
Tel (816) 874-4655
Fax (816) 874-4675
www.trekkdesigngroup.com
Missouri Cert. of Authority 2002010300

IF A SEAL IS PRESENT ON THIS SHEET IT HAS BEEN ELECTRONICALLY SEALED AND DATED.

BILL OF REINFORCING STEEL

NO. REQD.	MARK NO. SIZE MARK	LOCATION	EPOXY (E)	SHAPE NO.	STIRRUP (S)	SUBSTR. (X)	VARIES (V)	NO. EACH	B FT. IN.	C FT. IN.	D FT. IN.	E FT. IN.	F FT. IN.	H FT. IN.	K FT. IN.	NOMINAL LENGTH FT.IN.	ACTUAL LENGTH FT.IN.	WEIGHT LBS.
		SUPERSTRUCTURE																
		END BENT NO. 1																
11	6 F101	WING BRACE	E	23	S				2 3.000	3 9.000	14.000	11.750	7.500	1 10.750	14.500	7 2	7 1	117
11	6 F102	WING BRACE	E	23	S				2 3.000	5 11.000	14.000	7.500	11.750	14.500	1 10.750	9 4	9 3	153
5	6 F103	DIAPHRAGM	E	23	S				2 11.000	5 8.000				2 8.000	14.875	8 7	8 6	64
5	6 F104	DIAPHRAGM	E	21	S				2 11.000	6 5.000				2 8.000	14.875	9 4	9 0	68
12	7 H101	BEAM/DIAPHRAGM	E	20					31 4.000							31 4	31 4	769
9	6 H102	BEAM/DIAPHRAGM	E	20					31 4.000							31 4	31 4	424
4	6 H103	BEAM	E	20			V	1	1810.000							18 10	18 10	109
		INC = 5.000 INCH							17 7.000							17 7	17 7	
8	6 H104	DIAPHRAGM	E	20					9 11.000							9 11	9 11	119
2	6 H105	DIAPHRAGM	E	20					6 7.000							6 7	6 7	20
4	6 H106	DIAPHRAGM	E	20					3 6.000							3 6	3 6	21
2	6 H107	DIAPHRAGM	E	20					2 1.000							2 1	2 1	6
3	6 H108	DIAPHRAGM	E	20					5 6.000							5 6	5 6	25
3	5 H109	STRAND TIE BAR	E	23	S				15.000	3 2.375	15.000	6.375	13.625	6.375	13.625	5 8	5 8	18
26	5 H110	APP. HAUNCH	E	19	S				2 0.000	15.000						3 3	3 2	86
8	8 H111	WING	E	20					15 8.000							15 8	15 8	335
24	6 H112	WING	E	20					14 7.000							14 7	14 7	526
8	8 H113	WING	E	20					15 5.000							15 5	15 5	329
26	6 H114	WING	E	20					14 7.000							14 7	14 7	570
14	5 U101	BEAM	E	10	S					6 4.500	3 0.375					15 9	15 7	228
8	4 U102	BEAM	E	13	S				3 0.375	2 8.000	3 0.375	2 8.000				12 2	11 11	64
12	4 U103	BEAM	E	13	S				3 0.375	3 0.500	3 0.375	3 0.500				12 11	12 8	102
4	4 U104	BEAM	E	10	S					3 0.500	3 0.375	3 0.500				9 1	8 11	24
20	5 U105	DIAPHRAGM	E	10	S					4 10.000	2 5.750					12 2	11 11	249
20	6 U106	DIAPHRAGM	E	19	S				3 9.000	3 0.375						6 9	6 7	198
38	6 U107	DIAPHRAGM	E	19	S				3 5.000	5 1.000						8 6	8 4	476
12	5 V101	BEAM	E	20					6 5.000							6 5	6 5	80
15	6 V102	DIAPHRAGM	E	20					3 9.000							3 9	3 9	84
26	6 V103	WING	E	20			V	2	8 7.000							8 7	8 7	325
		INC = 0.500 INCH							8 1.000							8 1	8 1	
2	6 V104	WING	E	20					8 8.000							8 8	8 8	26
24	6 V105	WING	E	20			V	2	9 1.000							9 1	9 1	320
		INC = 0.5000 INCH							8 7.500							8 8	8 8	
2	6 V106	WING	E	20					9 1.500							9 1	9 1	27
		END BENT NO. 2																
11	6 F201	WING BRACE	E	23	S				2 3.000	3 9.000	14.000	11.750	7.500	1 10.750	14.500	7 2	7 1	117
11	6 F202	WING BRACE	E	23	S				2 3.000	5 11.000	14.000	7.500	11.750	14.500	1 10.750	9 4	9 3	153
5	6 F203	DIAPHRAGM	E	23	S				2 11.000	5 8.000				2 8.000	14.875	8 7	8 6	64
5	6 F204	DIAPHRAGM	E	21	S				2 11.000	6 5.000				2 8.000	14.875	9 4	9 0	68
12	7 H201	BEAM/DIAPHRAGM	E	20					31 4.000							31 4	31 4	769
9	6 H202	BEAM/DIAPHRAGM	E	20					31 4.000							31 4	31 4	424
4	6 H203	BEAM	E	20			V	1	1810.000							18 10	18 10	109
		INC = 5.000 INCH							17 7.000							17 7	17 7	
8	6 H204	DIAPHRAGM	E	20					9 11.000							9 11	9 11	119
2	6 H205	DIAPHRAGM	E	20					6 7.000							6 7	6 7	20
4	6 H206	DIAPHRAGM	E	20					3 6.000							3 6	3 6	21
2	6 H207	DIAPHRAGM	E	20					2 1.000							2 1	2 1	6

BILL OF REINFORCING STEEL

NO. REQD.	MARK NO. SIZE MARK	LOCATION	EPOXY (E)	SHAPE NO.	STIRRUP (S)	SUBSTR. (X)	VARIES (V)	NO. EACH	B FT. IN.	C FT. IN.	D FT. IN.	E FT. IN.	F FT. IN.	H FT. IN.	K FT. IN.	NOMINAL LENGTH FT.IN.	ACTUAL LENGTH FT.IN.	WEIGHT LBS.
3	6 H208	DIAPHRAGM	E	20					5 6.000							5 6	5 6	25
3	5 H209	STRAND TIE BAR	E	23	S				15.000	3 2.375	15.000	6.375	13.625	6.375	13.625	5 8	5 8	18
26	5 H210	APP. HAUNCH	E	19	S				2 0.000	15.000						3 3	3 2	86
8	8 H211	WING	E	20					15 8.000							15 8	15 8	335
24	6 H212	WING	E	20					14 7.000							14 7	14 7	526
8	8 H213	WING	E	20					15 5.000							15 5	15 5	329
22	6 H214	WING	E	20					14 7.000							14 7	14 7	482
14	5 U201	BEAM	E	10	S					6 4.500	3 0.375					15 9	15 7	228
8	4 U202	BEAM	E	13	S				3 0.375	2 8.000	3 0.375	2 8.000				12 2	11 11	64
12	4 U203	BEAM	E	13	S				3 0.375	3 0.500	3 0.375	3 0.500				12 11	12 8	102
4	4 U204	BEAM	E	10	S					3 0.500	3 0.375	3 0.500				9 1	8 11	24
20	5 U205	DIAPHRAGM	E	10	S					4 10.000	2 5.750					12 2	11 11	249
20	6 U206	DIAPHRAGM	E	19	S				3 9.000	3 0.375						6 9	6 7	198
38	6 U207	DIAPHRAGM	E	19	S				3 5.000	5 1.000						8 6	8 4	476
12	5 V201	BEAM	E	20					6 5.000							6 5	6 5	80
15	6 V202	DIAPHRAGM	E	20					3 9.000							3 9	3 9	84
26	6 V203	WING	E	20			V	2	8 7.000							8 7	8 7	325
		INC = 0.500 INCH							8 1.000							8 1	8 1	
2	6 V204	WING	E	20					8 1.000							8 1	8 1	24
24	6 V205	WING	E	20			V	2	8 1.000							8 1	8 1	284
		INC = 0.500 INCH							7 7.500							7 8	7 8	
2	6 V206	WING	E	20					7 7.000							7 7	7 7	23
		SLAB																
42	6 S1	SLAB	E	20			V	2	6 1.500							6 2	6 2	1065
		INC= 12.875 INCH							27 7.000							27 7	27 7	
207	6 S2	SLAB	E	20					28 5.000							28 5	28 5	8835
50	5 S3	SLAB	E	20					59 9.000							59 9	59 9	3116
228	5 S4	SLAB	E	20					5 2.000							5 2	5 2	1229
12	5 S5	SLAB	E	20					59 9.000							59 9	59 9	748
		TYPE D BARRIER																
224	5 R1	BARRIER	E	26					3 3.000	5.125	3 3.625			3 3.000	7.000	6 9	6 9	1577
224	5 R2	BARRIER	E	19	S				20.250	9.625						2 6	2 5	565
224	5 R3	BARRIER	E	27	S					9.625	15.250	5.250	12.000	15.000	2.875	3 6	3 4	779
40	5 R4	BARRIER	E	20					56 9.000							56 9	56 9	2368
20	5 K1	BARRIER	E	27	S				3 8.000	9.250	5.250	3 2.875		5.125	1.000	8 1	8 0	167
84	5 K2	BARRIER	E	27	S				3 8.000	9.250	14.500	2 5.750		14.250	2.750	8 2	8 1	708
4	5 K3	BARRIER	E	27	S				3 8.000	9.250	14.500	8.000	12.000	14.250	2.750	7 4	7 3	30
20	5 K4	BARRIER	E	19	S		V	4	2 4.250	10.000						3 2	3 1	66
		INC= 0.500 INCH							2 6.250	10.000						3 4	3 3	
20	5 K5	BARRIER	E	14	S		V	4	8.375	9.625	18.500			4.000	18.000	3 1	2 11	63
		INC = 0.500 INCH							8.375	9.625	20.500			4.500	20.000	3 3	3 1	
12	5 K6	BARRIER	E	19	S		V	4	2 6.750	10.000						3 5	3 3	41
		INC= 0.500 INCH							2 7.750	10.000						3 6	3 4	
12	5 K7	BARRIER	E	14	S		V	4		10.000	2 6.750			2 6.125	6.250	3 5	3 3	41
		INC = 0.500 INCH								10.000	2 7.750			2 7.125	6.500	3 6	3 4	
36	5 K8	BARRIER	E	19	S		V	4	2 8.500	10.000						3 7	3 5	138
		INC = 0.750 INCH							3 2.500	10.000						4 1	3 11	
36	5 K9	BARRIER	E	14	S		V	4		10.000	2 8.625			2 7.875	6.750	3 7	3 5	138
		INC = 0.750 INCH								10.000	3 2.625			3 1.875	7.750	4 1	3 11	
40	5 K10	BARRIER	E	19	S				3 3.000	10.000						4 1	4 0	167

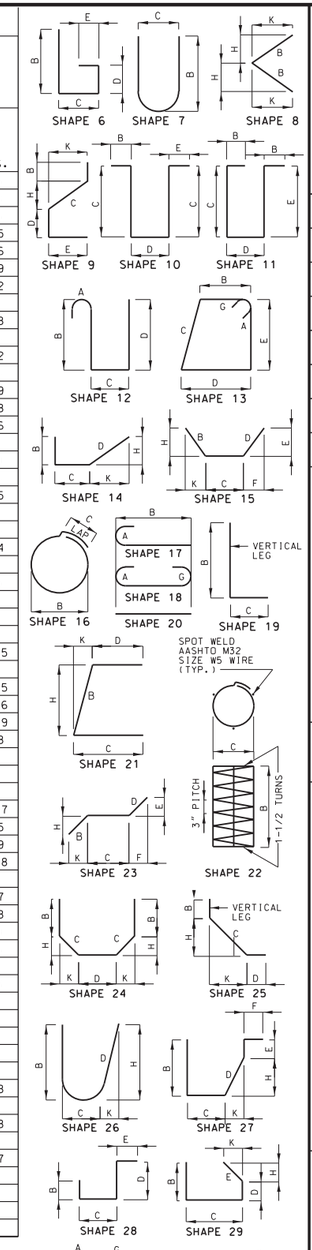

BENDING DIAGRAMS

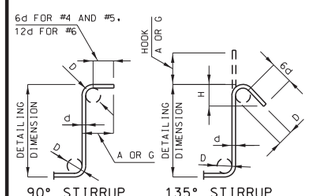

STIRRUP HOOK DIMENSIONS				
GRADES 40 - 50 - 60 KSI				
BAR SIZE	D (IN.)	90° HOOK	135° HOOK	
		HOOK A OR G	HOOK A OR G	APPROX. H
#4	2"	4 1/2"	4 1/2"	3"
#5	2 1/2"	6"	5 1/2"	3 3/4"
#6	4 1/2"	12"	8"	4 1/2"

NOTE: UNLESS OTHERWISE NOTED, DIAMETER "D" IS THE SAME FOR ALL BENDS AND HOOKS ON A BAR.

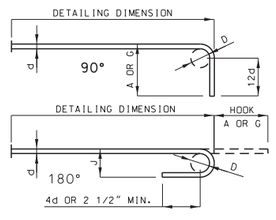

END HOOK DIMENSIONS				
BAR SIZE	D (IN.)	ALL GRADES		
		180° HOOKS		90° HOOKS
		A OR G	J	A OR G
#3	2 1/4"	5"	3"	6"
#4	3"	6"	4"	8"
#5	3 3/4"	7"	5"	10"
#6	4 1/2"	8"	6"	12"
#7	5 1/4"	10"	7"	14"
#8	6"	11"	8"	16"
#9	9 1/2"	15"	11 3/4"	19"
#10	10 3/4"	17"	13 1/4"	22"
#11	12"	19"	14 3/4"	2'-0"
#14	18 1/4"	2'-3"	21 3/4"	2'-7"

NOTE:
ALL STANDARD HOOKS AND BENDS OTHER THAN 180 DEGREE ARE TO BE BENT WITH SAME PROCEDURE AS FOR 90 DEGREE STANDARD HOOKS.
HOOKS AND BENDS SHALL BE IN ACCORDANCE WITH THE PROCEDURES AS SHOWN ON THIS SHEET.
E = EPOXY COATED REINFORCEMENT.
S = STIRRUP.
X = BAR IS INCLUDED IN SUBSTRUCTURE QUANTITIES.
V = BAR DIMENSIONS VARY IN EQUAL INCREMENTS BETWEEN DIMENSIONS SHOWN ON THIS LINE AND THE FOLLOWING LINE.
NO. EA. = NUMBER OF BARS OF EACH LENGTH.
NOMINAL LENGTHS ARE BASED ON OUT TO OUT DIMENSIONS SHOWN IN BENDING DIAGRAMS AND ARE LISTED FOR FABRICATORS USE. (NEAREST INCH)
ACTUAL LENGTHS ARE MEASURED ALONG CENTERLINE BAR TO THE NEAREST INCH.
PAYWEIGHTS ARE BASED ON ACTUAL LENGTHS.
FOUR ANGLE OR CHANNEL SPACERS ARE REQUIRED FOR EACH COLUMN SPIRAL. SPACERS ARE TO BE PLACED ON INSIDE OF SPIRALS. LENGTH AND WEIGHT OF COLUMN SPIRALS DO NOT INCLUDE SPLICES OR SPACERS.
REINFORCING STEEL (GRADE 60) FY = 60,000 PSI.

STATE OF MISSOURI
MARK EUGENE DOERFLINGER
NUMBER E-26002
REGISTERED PROFESSIONAL ENGINEER
THIS SHEET HAS BEEN SEALED, SEALED AND DATED ELECTRONICALLY.

IF A SEAL IS PRESENT ON THIS SHEET IT HAS BEEN ELECTRONICALLY SEALED AND DATED.

DATE PREPARED	7/7/2020
ROUTE	123
STATE	MO
DISTRICT	BR
SHEET NO.	21
COUNTY	POLK
JOB NO.	J7S3205
CONTRACT ID.	
PROJECT NO.	
BRIDGE NO.	A8871

DESCRIPTION

DATE

MISSOURI HIGHWAYS AND TRANSPORTATION COMMISSION
105 WEST CAPITOL
JEFFERSON CITY, MO 65102
1-888-ASK-MODOT (1-888-275-6636)

TREKK DESIGN GROUP, LLC
1411 East 104th St.
Kansas City, MO 64131
Tel (816) 874-4655
Fax (816) 874-4675
www.trekkdesigngroup.com
Missouri Cert. of Authority 2002010300

Detailed Jan 2020
Checked Jan 2020

Note: This drawing is not to scale. Follow dimensions.

BILL OF REINFORCING STEEL

NO. REQD.	MARK NO. SIZE MARK	LOCATION	EPOXY (E)	SHAPE NO.	STIRRUP (S)	SUBSTR. (X)	VARIES (V)	NO. EACH	B FT. IN.	C FT. IN.	D FT. IN.	E FT. IN.	F FT. IN.	H FT. IN.	K FT. IN.	NOMINAL LENGTH FT.IN.	ACTUAL LENGTH FT.IN.	WEIGHT LBS.
40	5 K11	BARRIER	E	21	S					10.000	3 3.125			3 2.375	7.875	4 1	3 11	163
48	5 K12	BARRIER	E	20					16 0.000							16 0	16 0	801
12	5 K13	BARRIER	E	20			V	4	9 3.000							9 3	9 3	153
		INC = 36.000 INCH							15 3.000							15 3	15 3	
48	5 K14	BARRIER	E	20					16 8.000							16 8	16 8	834
12	5 K15	BARRIER	E	20			V	4	9 11.000							9 11	9 11	162
		INC = 36.000 INCH							1511.000							15 11	15 11	
		SLIP FORM OPTION																
16	5 C1	SLIP FORM	E	20					12 0.000							12 0	12 0	200

BILL OF REINFORCING STEEL

NO. REQD.	MARK NO. SIZE MARK	LOCATION	EPOXY (E)	SHAPE NO.	STIRRUP (S)	SUBSTR. (X)	VARIES (V)	NO. EACH	B FT. IN.	C FT. IN.	D FT. IN.	E FT. IN.	F FT. IN.	H FT. IN.	K FT. IN.	NOMINAL LENGTH FT.IN.	ACTUAL LENGTH FT.IN.	WEIGHT LBS.
		TOTALS																
	4																	0
	4		E															380
	5																	0
	5		E															15576
	6																	0
	6		E															17126
	7																	0
	7		E															1538
	8																	0
	8		E															1328
	9																	0
		TOTAL																0
		TOTAL	E															35948
		SLAB ON GIRDER																
	4		E															380
	5		E															6415
	6		E															17126
	7		E															1538
	8		E															1328
		TOTAL	E															26787
		REINFORCING STEEL (BRIDGES)																
	4																	0
	5																	0
	6																	0
		TOTAL																0
		BARRIER																
	4		E															0
	5		E															8160
		TOTAL	E															8160
		SLIP FORM BARRIER																
	5		E															200
		TOTAL	E															200

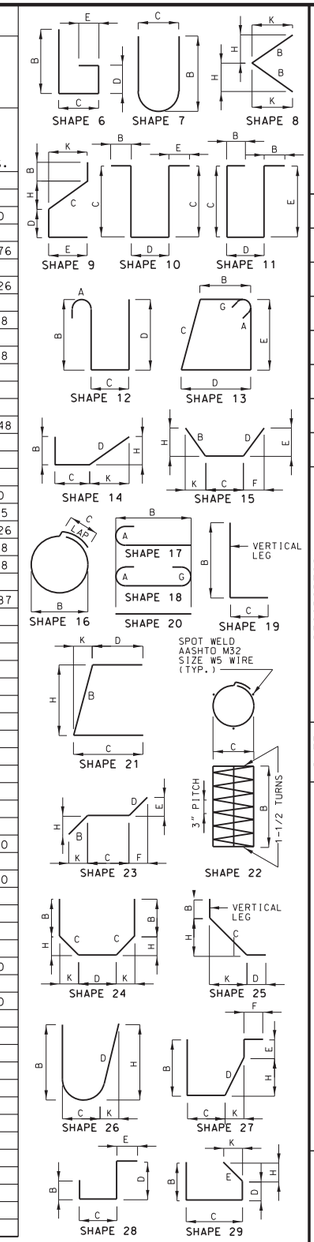

STATE OF MISSOURI
MARK EUGENE DOERFLINGER
NUMBER E-26002
REGISTERED PROFESSIONAL ENGINEER
THIS SHEET WAS ORIGINALLY SIGNED, SEALED AND DATED ELECTRONICALLY.

DATE PREPARED	
7/7/2020	
ROUTE 123	STATE MO
DISTRICT BR	SHEET NO. 22
COUNTY POLK	
JOB NO. J7S3205	
CONTRACT ID.	
PROJECT NO.	
BRIDGE NO. A8871	

DESCRIPTION

DATE

IF A SEAL IS PRESENT ON THIS SHEET IT HAS BEEN ELECTRONICALLY SEALED AND DATED.

MISSOURI HIGHWAYS AND TRANSPORTATION COMMISSION
105 WEST CAPITOL
JEFFERSON CITY, MO 65102
1-888-ASK-MODOT (1-888-275-6636)

TREKK DESIGN GROUP, LLC
5411 East 104th St.
Kansas City, MO 64137
Tel (816) 874-4651
Fax (816) 874-4675
www.trekkdesigngroup.com
Missouri Cert. of Authority 2002010300

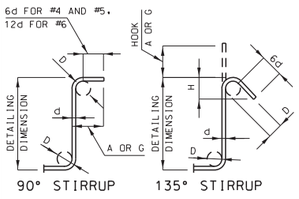

STIRRUP HOOK DIMENSIONS				
GRADES 40 - 50 - 60 KSI				
BAR SIZE	D (IN.)	90° HOOK	135° HOOK	
		HOOK A OR G	HOOK A OR G	APPROX. H
#4	2"	4 1/2"	4 1/2"	3"
#5	2 1/2"	6"	5 1/2"	3 3/4"
#6	4 1/2"	12"	8"	4 1/2"

NOTE: UNLESS OTHERWISE NOTED, DIAMETER "D" IS THE SAME FOR ALL BENDS AND HOOKS ON A BAR.

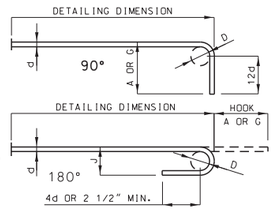

END HOOK DIMENSIONS				
BAR SIZE	D (IN.)	ALL GRADES		
		180° HOOKS		90° HOOKS
		A OR G	J	A OR G
#3	2 1/4"	5"	3"	6"
#4	3"	6"	4"	8"
#5	3 3/4"	7"	5"	10"
#6	4 1/2"	8"	6"	12"
#7	5 1/4"	10"	7"	14"
#8	6"	11"	8"	16"
#9	9 1/2"	15"	11 3/4"	19"
#10	10 3/4"	17"	13 1/4"	22"
#11	12"	19"	14 3/4"	2'-0"
#14	18 1/4"	2'-3"	21 3/4"	2'-7"

NOTE:
ALL STANDARD HOOKS AND BENDS OTHER THAN 180 DEGREE ARE TO BE BENT WITH SAME PROCEDURE AS FOR 90 DEGREE STANDARD HOOKS.
HOOKS AND BENDS SHALL BE IN ACCORDANCE WITH THE PROCEDURES AS SHOWN ON THIS SHEET.
E = EPOXY COATED REINFORCEMENT.
S = STIRRUP.
X = BAR IS INCLUDED IN SUBSTRUCTURE QUANTITIES.
V = BAR DIMENSIONS VARY IN EQUAL INCREMENTS BETWEEN DIMENSIONS SHOWN ON THIS LINE AND THE FOLLOWING LINE.
NO. EA. = NUMBER OF BARS OF EACH LENGTH.
NOMINAL LENGTHS ARE BASED ON OUT TO OUT DIMENSIONS SHOWN IN BENDING DIAGRAMS AND ARE LISTED FOR FABRICATORS USE. (NEAREST INCH)
ACTUAL LENGTHS ARE MEASURED ALONG CENTERLINE BAR TO THE NEAREST INCH.
PAYWEIGHTS ARE BASED ON ACTUAL LENGTHS.
FOUR ANGLE OR CHANNEL SPACERS ARE REQUIRED FOR EACH COLUMN SPIRAL. SPACERS ARE TO BE PLACED ON INSIDE OF SPIRALS. LENGTH AND WEIGHT OF COLUMN SPIRALS DO NOT INCLUDE SPLICES OR SPACERS.
REINFORCING STEEL (GRADE 60) FY = 60,000 PSI.

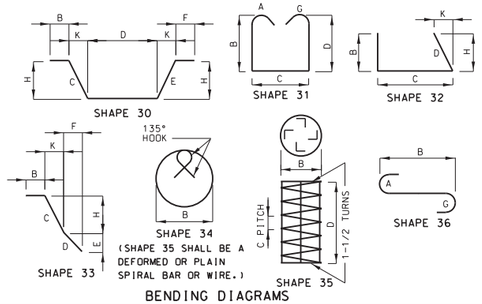

BENDING DIAGRAMS

Detailed Jan 2020
Checked Jan 2020

Note: This drawing is not to scale. Follow dimensions.

PART PLAN SHOWING PILE NUMBERING FOR RECORDING AS-BUILT PILE DATA

As-Built Pile Data			
Pile No.	Length in Place (ft)	Computed Nominal Axial Compressive Resistance (kips)	Remarks
			END BENT NO. 1
1			
2			
3			
4			
5			

As-Built Pile Data			
Pile No.	Length in Place (ft)	Computed Nominal Axial Compressive Resistance (kips)	Remarks
			END BENT NO. 2
6			
7			
8			
9			
10			

As-Built Pile Data			
Pile No.	Length in Place (ft)	Computed Nominal Axial Compressive Resistance (kips)	Remarks

Note:
Indicate in remarks column:
A. Pile type and grade
B. Batter
C. Driven to practical refusal

This sheet to be completed by MoDOT construction personnel.

Detailed Jan 2020
Checked Jan 2020

Note: This drawing is not to scale. Follow dimensions.

STATE OF MISSOURI
MARK EUGENE DOERFLINGER
NUMBER E-26002
REGISTERED PROFESSIONAL ENGINEER
THIS SHEET HAS BEEN SIGNED, SEALED AND DATED ELECTRONICALLY.

DATE PREPARED	6/11/2020
ROUTE	123
STATE	MO
DISTRICT	BR
SHEET NO.	23
COUNTY	POLK
JOB NO.	J7S3205
CONTRACT ID.	
PROJECT NO.	
BRIDGE NO.	A8871

DESCRIPTION
DATE

MISSOURI HIGHWAYS AND TRANSPORTATION COMMISSION
105 WEST CAPITOL
JEFFERSON CITY, MO 65102
1-888-ASK-MODOT (1-888-275-6636)

1411 East 104th St.
Kansas City, MO 64131
Tel (816) 874-4655
Fax (816) 874-4675
www.trekkdesigngroup.com
Missouri Cert. of Authority 2002010300
TREKK DESIGN GROUP, LLC

IF A SEAL IS PRESENT ON THIS SHEET IT HAS BEEN ELECTRONICALLY SEALED AND DATED.

KEY TO SYMBOLS

Missouri Department of Transportation
1617 Missouri Boulevard
Jefferson City, Missouri 65109

CLIENT MoDOT Bridge Division/SW District
PROJECT NAME A8871
PROJECT NUMBER J7S3205
PROJECT LOCATION Over Barren Creek

LITHOLOGIC SYMBOLS
(Unified Soil Classification System)

- Asphalt
- Boulders and cobbles
- USCS High Plasticity Clay
- USCS High Plasticity Gravelly Clay
- USCS Low Plasticity Clay
- USCS Low Plasticity Gravelly Clay
- USCS Low Plasticity Sandy Clay
- USCS Clayey Gravel
- USCS Poorly-graded Sandy Gravel
- USCS Well-graded Gravel
- USCS Well-graded Gravel with Clay
- Highly Weathered Limestone
- Limestone
- No Core
- Shale
- USCS Poorly-graded Sand

SAMPLER SYMBOLS

- Rock Core Barrel
- Split-Spoon Sampler

WELL CONSTRUCTION SYMBOLS

ABBREVIATIONS

LL - LIQUID LIMIT (%)
PI - PLASTIC INDEX (%)
W - MOISTURE CONTENT (%)
DD - DRY DENSITY (PCF)
NP - NON PLASTIC
-200 - PERCENT PASSING NO. 200 SIEVE
PP - POCKET PENETROMETER (TSF)
Qu - UNCONFINED COMPRESSIVE STRENGTH (PSF)
TV - TORVANE
PID - PHOTOIONIZATION DETECTOR
UC - UNCONFINED COMPRESSION
ppm - PARTS PER MILLION

Water Level at Time of Drilling
Water Level at End of Drilling
Water Level after Drilling

KEY TO SYMBOLS - MODOT 20150728.GDT - 11/21/19 12:26 - Z:\SIG\GINT\PROJECT FILES\J7S3205-A8871.GPJ

Missouri Department of Transportation
Construction and Materials

BORING NO. V-19-117
Page 1 of 1

Job No.: J7S3205
Design: A8871
Bent: 1
Station: 51+33.3
Offset: 8.5 R
Elevation: 942.0
Requested Station:
Requested Offset:
Requested Elevation:
Drill No.: G-9667
County: Polk
Skew: 25° RA
Logged By: Duncan Noack
Northing: 650714.9
Easting: 1332396.4
Requested Northing:
Requested Easting:
Equipment: Acker Renegade ,Split-Spoon Sampler, NQ
Location Note:
Hammer Efficiency: 76%
Route: 123
Location: Over Barren Creek
Operator: Kenny Mathews
Date of Work: 10/01/19-10/02/19
Depth to Water:
Depth Hole Open:
Time Change:
Drilling Method: Hollow Stem Auger

Depth (ft)	Graphic	Description	Elevation (ft)	Sample Type	REC % (RQD %)	Blow Counts (N_{60})	Shear Data	Field Tests	Index Tests
0		0.0-0.4' ASPHALT							
		0.4-4.6' Red, CLAYEY GRAVEL, moist, fine grained	940						
5		4.6-9.7' Red, FAT CLAY, soft, moist			40	0-0-2 (3)		PP = 0.50 tsf	LL = 65 PL = 27
			935						
10		9.7-16.1' Red to dark brown, GRAVELLY LEAN CLAY, very stiff, moist			13	6-10-6 (20)			
			930						
15					45	4-5-41/0.1'		PP = 2.50 tsf	
		16.1-19.5' Limestone, highly weathered, with clay seams	925						
20		19.5-20.8' Red, GRAVELLY LEAN CLAY, hard, wet			56	2-40/0.4'			
		20.8-30.8' Limestone, thin bedded, moderately hard, slightly weathered, fine grained	920		100 (80)		Qu Test Results UCS = 1830 ksf MC = 0% γ_{moist} = 166.5 pcf		
25			915		98 (92)		Qu Test Results UCS = 1610 ksf MC = 0% γ_{moist} = 165.6 pcf		
30		Bottom of borehole at 30.8 feet.							

N_{60} = (Em/60)Nm N_{60} - Corrected N value for standard 60% SPT efficiency; Em - Measured hammer efficiency in percent; Nm - Observed N-value
(1) = Assumed, (2) = Actual

Coordinate System: U.S. State Plane 1983
Coordinate Zone: Missouri Central
Coordinate Proj. Factor:
Coordinate Datum: NAD 83 (CONUS)
Coordinate Units: U.S. Survey Feet

* Persons using this information are cautioned that the materials shown are determined by the equipment noted and accuracy of the "log of materials" is limited thereby and by judgement of the operator. THIS INFORMATION IS FOR DESIGN PURPOSES ONLY.

LETTER BOREHOLE - MODOT 20150728.GDT - 11/21/19 12:25 - Z:\SIG\GINT\PROJECT FILES\J7S3205-A8871.GPJ

STATE OF MISSOURI
MARK EUGENE DOERFLINGER
NUMBER E-26002
REGISTERED PROFESSIONAL ENGINEER
THIS SHEET HAS BEEN SIGNED, SEALED AND DATED ELECTRONICALLY.

DATE PREPARED 6/11/2020
ROUTE 123 | STATE MO
DISTRICT BR | SHEET NO. 24
COUNTY POLK
JOB NO. J7S3205
CONTRACT ID.
PROJECT NO.
BRIDGE NO. A8871

DESCRIPTION
DATE

MISSOURI HIGHWAYS AND TRANSPORTATION COMMISSION
105 WEST CAPITOL
JEFFERSON CITY, MO 65102
1-888-ASK-MODOT (1-888-275-6636)

IF A SEAL IS PRESENT ON THIS SHEET IT HAS BEEN ELECTRONICALLY SEALED AND DATED.

TREKK DESIGN GROUP, LLC
1411 East 104th St.
Kansas City, MO 64131
Tel (816) 874-4655
Fax (816) 874-4675
www.trekkdesigngroup.com
Missouri Cert. of Authority 2002010300

BORING DATA

NOTE: For locations of borings, see Sheet No. 1

Detailed Jan 2020
Checked Jan 2020

Note: This drawing is not to scale. Follow dimensions.

B_A8871_024_J7S3205_borings_001.dgn 1:26:45 PM 6/11/2020

Missouri Department of Transportation
Construction and Materials

BORING NO. V-19-118
Page 1 of 2

Job No.: J7S3205 **County:** Polk **Route:** 123
Design: A8871 **Skew:** 25° RA **Location:** Over Barren Creek
Bent: 2 **Logged By:** Duncan Noack **Operator:** Casey Williams
Station: 52+49.3 **Northing:** 650603.8 **Date of Work:** 10/02/19-10/02/19
Offset: 6.0 R **Easting:** 1332401.4 **Depth to Water:**
Elevation: 938.7 **Requested Northing:** **Depth Hole Open:**
Requested Station: **Requested Easting:** **Time Change:**
Requested Offset: **Equipment:** Acker Renegade ,Split-Spoon Sampler, NQ
Requested Elevation: **Location Note:**
Drill No.: G-9667 **Hammer Efficiency:** 76% **Drilling Method:** Continuous Flight Auger

Depth (ft)	Graphic	Description	Elevation (ft)	Sample Type	REC % (RQD %)	Blow Counts (N_{60})	Shear Data	Field Tests	Index Tests
0		0.0-0.6' ASPHALT 0.6-22.4' Dark brown, GRAVELLY FAT CLAY, medium stiff to hard, moist							
			935						
5					40	2-2-2 (5)		PP = 2.00 tsf	
			930						
10					40	5-4-5 (11)			
			925						
15					93	7-14-16 (38)			
			920						
20					67	5-5-4 (11)		PP = 1.00 tsf	LL = 58 PL = 23
		22.4-31.2' Limestone, light gray, thin bedded, moderately hard, slightly weathered	915		100 (100)		Qu Test Results UCS = 1280 ksf MC = 0% γ_{moist} = 164.1 pcf		
25									
			910		70 (68)		Qu Test Results UCS = 1920 ksf MC = 0% γ_{moist} = 167 pcf		
30		31.2-38.0' Void (assumed in-filled with soft sediment)							
			905						
35									
			900				Qu Test Results UCS = 441 ksf		
40									

N_{60} = (Em/60)Nm N_{60} - Corrected N value for standard 60% SPT efficiency; Em - Measured hammer efficiency in percent; Nm - Observed N-value
(1) = Assumed, (2) = Actual

Coordinate System: U.S. State Plane 1983 **Coordinate Zone:** Missouri Central **Coordinate Proj. Factor:**
Coordinate Datum: NAD 83 (CONUS) **Coordinate Units:** U.S. Survey Feet

* Persons using this information are cautioned that the materials shown are determined by the equipment noted and accuracy of the "log of materials" is limited thereby and by judgement of the operator. THIS INFORMATION IS FOR DESIGN PURPOSES ONLY.

LETTER BOREHOLE - MODOT 20150728.GDT - 11/21/19 12:25 - Z:\SG\GINTPROJECT FILES\J7S3205-A8871.GPJ

Missouri Department of Transportation
Construction and Materials

BORING NO. V-19-118
Page 2 of 2

Job No.: J7S3205 **County:** Polk **Route:** 123
Design: A8871 **Skew:** 25° RA **Location:** Over Barren Creek
Bent: 2 **Logged By:** Duncan Noack **Operator:** Casey Williams
Station: 52+49.3 **Northing:** 650603.8 **Date of Work:** 10/02/19-10/02/19
Offset: 6.0 R **Easting:** 1332401.4 **Depth to Water:**
Elevation: 938.7 **Requested Northing:** **Depth Hole Open:**
Requested Station: **Requested Easting:** **Time Change:**
Requested Offset: **Equipment:** Acker Renegade ,Split-Spoon Sampler, NQ
Requested Elevation: **Location Note:**
Drill No.: G-9667 **Hammer Efficiency:** 76% **Drilling Method:** Continuous Flight Auger

Depth (ft)	Graphic	Description	Elevation (ft)	Sample Type	REC % (RQD %)	Blow Counts (N_{60})	Shear Data	Field Tests	Index Tests
40		38.0-53.9' Limestone, light gray, thin bedded, soft to moderately hard, slightly weathered, vuggy *(continued)*			90 (84)		MC = 0% γ_{moist} = 145.8 pcf		
			895						
45					100 (78)		Qu Test Results UCS = 895 ksf MC = 0% γ_{moist} = 148.7 pcf		
			890						
50					98 (98)		Qu Test Results UCS = 1170 ksf MC = 0% γ_{moist} = 155.2 pcf		
			885						
55		53.9-66.2' Argillaceous Limestone, dark gray, thin bedded, medium hard to moderately hard, slightly weathered			100 (100)		Qu Test Results UCS = 1100 ksf MC = 0% γ_{moist} = 160.7 pcf		
			880						
60					100 (100)		Qu Test Results UCS = 1020 ksf MC = 0% γ_{moist} = 151.1 pcf		
			875						
65					100 (100)		Qu Test Results UCS = 2010 ksf MC = 0% γ_{moist} = 153.9 pcf		
		66.2-67.7' Shale, dark gray							
		Bottom of borehole at 67.7 feet.							

N_{60} = (Em/60)Nm N_{60} - Corrected N value for standard 60% SPT efficiency; Em - Measured hammer efficiency in percent; Nm - Observed N-value
(1) = Assumed, (2) = Actual

Coordinate System: U.S. State Plane 1983 **Coordinate Zone:** Missouri Central **Coordinate Proj. Factor:**
Coordinate Datum: NAD 83 (CONUS) **Coordinate Units:** U.S. Survey Feet

* Persons using this information are cautioned that the materials shown are determined by the equipment noted and accuracy of the "log of materials" is limited thereby and by judgement of the operator. THIS INFORMATION IS FOR DESIGN PURPOSES ONLY.

LETTER BOREHOLE - MODOT 20150728.GDT - 11/21/19 12:25 - Z:\SG\GINTPROJECT FILES\J7S3205-A8871.GPJ

BORING DATA

NOTE: For locations of borings, see Sheet No. 1

STATE OF MISSOURI
MARK EUGENE DOERFLINGER
NUMBER E-26002
REGISTERED PROFESSIONAL ENGINEER
THIS SHEET HAS BEEN SIGNED, SEALED AND DATED ELECTRONICALLY.

DATE PREPARED 6/11/2020
ROUTE 123 STATE MO
DISTRICT BR SHEET NO. 25
COUNTY POLK
JOB NO. J7S3205
CONTRACT ID.
PROJECT NO.
BRIDGE NO. A8871

DESCRIPTION
DATE

MISSOURI HIGHWAYS AND TRANSPORTATION COMMISSION
105 WEST CAPITOL
JEFFERSON CITY, MO 65102
1-888-ASK-MODOT (1-888-275-6636)

IF A SEAL IS PRESENT ON THIS SHEET IT HAS BEEN ELECTRONICALLY SEALED AND DATED.

1411 East 104th St.
Kansas City, MO 64131
Tel (816) 874-4655
Fax (816) 874-4675
www.trekkdesigngroup.com
Missouri Cert. of Authority 2002010300
TREKK DESIGN GROUP, LLC

Detailed Jan 2020
Checked Jan 2020

Note: This drawing is not to scale. Follow dimensions.

Detailed Jan 2020
Checked Jan 2020

Missouri Department of Transportation
Construction and Materials

FIGURE 8 - BORING NO. V-19-118

Job No.: J7S3205	**County:** Polk	**Route:** 123	**Logged By:** Duncan Noack
Design: A8871	**Skew:** 25° RA	**Coordinate Units:** U.S. Survey Feet	**Operator:** Casey Williams
Bent: 2	**Location:** Over Barren Creek	**Coordinate Proj. Factor:**	**Date of Work:** 10/02/19-10/02/19
Station: 52+49.3	**Northing:** 650603.8	**Coordinate System:** U.S. State Plane 1983	**Depth to Water:**
Offset: 6.0 R	**Easting:** 1332401.4	**Coordinate Datum:** NAD 83 (CONUS)	**Time Change:**
Elevation: 938.7	**Drilling Method:** Continuous Flight Auger	**Coordinate Zone:** Missouri Central	**Depth Hole Open:**
Drill No.: G-9667	**Hammer Efficiency:** 76%	**Equipment:** Acker Renegade ,Split-Spoon Sampler, NQ	

Depth (ft)	Graphic	Description	Elevation (ft)	Scour Parameters: Compressible	Downdrag	Scour	Total Unit Weight (pcf)	Effective Unit Weight (pcf)	Undrained Shear Strength Su or c (psf)	Pocket Pen (tsf)	Torvane (tsf)	Blow Counts (N_{60})	Internal Friction Angle ϕ	Soil/Rock Strain (ϵ_{50}/K_{rm})	Lateral Subgrade Modulus K_r (pci)	Young's Modulus E_r (ksf)	Rock Quality Designation (RQD) (%)	Unconfined Compressive Strength Qu (ksf)
0		0 - 8.3' Soft clay		yes	no	yes	113(1)	113(1)	625(1)	2.0		2-2-2 (5)		0.015	65			
			930															
10		8.3 - 22.4' Stiff clay without free water		yes	no	yes	122(1)	122(1)	1375(1)			5-4-5 (11)		0.007	400			
							130(1)	68(1)	4750(1)			7-14-16 (38)		0.0045	1600			
			920															
20							122(1)	60(1)	1375(1)	1.0		5-5-4 (11)		0.007	400			
		22.4 - 31.2' Strong rock		no	no	no	160(1)	98(1)										
							164.1(2)	102(2)									100	1280
			910															
30							167(2)	105(2)									68	1920
		31.2 - 38' Soft clay		no	no	no	100(1)	38(1)						0.02	30			
							100(1)	38(1)						0.02	30			
		38 - 66.2' Strong rock *(Continued Next Page)*	900	no	no	no	160(1)	98(1)										
40																		

(1) = Assumed, (2) = Actual, (3) = Phi' 0, (PP) = Pocket Penetrometer

LPILE SUMMARY - MODOT_2015812.GDT - 11/15/19 15:23 - Z:\SIGN\TPROJECT FILES\J7S3205-A8871.GPJ

Missouri Department of Transportation
Construction and Materials

FIGURE 8 - BORING NO. V-19-118

Job No.: J7S3205	**County:** Polk	**Route:** 123	**Logged By:** Duncan Noack
Design: A8871	**Skew:** 25° RA	**Coordinate Units:** U.S. Survey Feet	**Operator:** Casey Williams
Bent: 2	**Location:** Over Barren Creek	**Coordinate Proj. Factor:**	**Date of Work:** 10/02/19-10/02/19
Station: 52+49.3	**Northing:** 650603.8	**Coordinate System:** U.S. State Plane 1983	**Depth to Water:**
Offset: 6.0 R	**Easting:** 1332401.4	**Coordinate Datum:** NAD 83 (CONUS)	**Time Change:**
Elevation: 938.7	**Drilling Method:** Continuous Flight Auger	**Coordinate Zone:** Missouri Central	**Depth Hole Open:**
Drill No.: G-9667	**Hammer Efficiency:** 76%	**Equipment:** Acker Renegade ,Split-Spoon Sampler, NQ	

Depth (ft)	Graphic	Description	Elevation (ft)	Scour Parameters: Compressible	Downdrag	Scour	Total Unit Weight (pcf)	Effective Unit Weight (pcf)	Undrained Shear Strength Su or c (psf)	Pocket Pen (tsf)	Torvane (tsf)	Blow Counts (N_{60})	Internal Friction Angle ϕ	Soil/Rock Strain (ϵ_{50}/K_{rm})	Lateral Subgrade Modulus K_r (pci)	Young's Modulus E_r (ksf)	Rock Quality Designation (RQD) (%)	Unconfined Compressive Strength Qu (ksf)
40		38 - 66.2' Strong rock *(continued)*		no	no	no	145.8(2)	83(2)									84	441
							148.7(2)	86(2)									78	895
			890															
50							155.2(2)	93(2)									98	1170
							160.7(2)	98(2)									100	1100
			880															
60							161.1(2)	99(2)									100	1020
							153.9(2)	92(2)									100	2010
		66.2 - 67.7' Weak rock		no	no	no	135(1)	73(1)							4000			
		Bottom of borehole at 67.7 feet.																

(1) = Assumed, (2) = Actual, (3) = Phi' 0, (PP) = Pocket Penetrometer

LPILE SUMMARY - MODOT_2015812.GDT - 11/15/19 15:23 - Z:\SIGN\TPROJECT FILES\J7S3205-A8871.GPJ

Note: This drawing is not to scale. Follow dimensions.

NOTE: For locations of borings, see Sheet No. 1

BORING DATA

B:_A8871_026_J7S3205_borings_003.dgn 1:28:49 PM 6/11/2020

TREKK DESIGN GROUP, LLC
1411 East 104th St.
Kansas City, MO 64131
Tel (816) 874-4655
Fax (816) 874-4675
www.trekkdesigngroup.com
Missouri Cert. of Authority 2002010300

MISSOURI HIGHWAYS AND TRANSPORTATION COMMISSION
MoDOT
105 WEST CAPITOL
JEFFERSON CITY, MO 65102
1-888-ASK-MODOT (1-888-275-6636)

DATE	DESCRIPTION

BRIDGE NO. A8871
PROJECT NO.
JOB NO. J7S3205
CONTRACT ID.
COUNTY POLK
DISTRICT BR
SHEET NO. 26
ROUTE 123
STATE MO
DATE PREPARED 6/11/2020

STATE OF MISSOURI
MARK EUGENE DONAGHEY
NUMBER E-26002
REGISTERED PROFESSIONAL ENGINEER
This seal only applies to the engineering data and analysis shown on this sheet.

IF A SEAL IS PRESENT ON THIS SHEET IT HAS BEEN ELECTRONICALLY SEALED AND DATED.

Missouri Department of Transportation
Construction and Materials

BORING NO. V-19-119
Page 1 of 2

Job No.: J7S3205	**County:** Polk	**Route:** 123
Design: A8871	**Skew:** 25° RA	**Location:** Over Barren Creek
Bent: 2	**Logged By:** Duncan Noack	**Operator:** Casey Williams
Station: 52+49.3	**Northing:** 650601.2	**Date of Work:** 10/02/19-10/09/19
Offset: 10.0 R	**Easting:** 1332399.8	**Depth to Water:**
Elevation: 938.7	**Requested Northing:**	**Depth Hole Open:**
Requested Station:	**Requested Easting:**	**Time Change:**
Requested Offset:	**Equipment:** Acker Renegade ,Split-Spoon Sampler, NQ	
Requested Elevation:	**Location Note:**	
Drill No.: G-9667	**Hammer Efficiency:** 76%	**Drilling Method:** Continuous Flight Auger

Depth (ft)	Graphic	Description	Elevation (ft)	Sample Type	REC % (RQD %)	Blow Counts (N_{60})	Shear Data	Field Tests	Index Tests
0		0.0-0.6' ASPHALT							
		0.6-18.0' Dark brown, GRAVELLY FAT CLAY, stiff to very stiff, moist	935						
5					27	2-5-4 (11)			
			930						
10					20	3-3-4 (9)			
			925						
15					67	7-12-11 (29)			
		18.0-18.6' BOULDERS and cobbles	920						
20		18.6-26.0' Dark brown, LEAN CLAY scattered coarse sand, medium stiff to soft, wet			13	3-2-3 (6)		PP = 0.00 tsf	
			915						
25		26.0-36.1' Gray, LEAN CLAY scattered coarse sand, very soft, wet			93	0-0-0 (0)		PP = 0.00 tsf	
			910						
30					100	0-0-0 (0)			LL = 35 PL = 16
			905						
35					0	40/0.1'			
		36.1-66.1' Limestone, light gray, thin bedded, medium hard to hard, slightly weathered	900		98 (92)		Qu Test Results UCS = 2280 ksf MC = 0% γ_{moist} = 168.8		
40									

N_{60} = (Em/60)Nm N_{60} - Corrected N value for standard 60% SPT efficiency; Em - Measured hammer efficiency in percent; Nm - Observed N-value
(1) = Assumed, (2) = Actual

Coordinate System: U.S. State Plane 1983 **Coordinate Zone:** Missouri Central **Coordinate Proj. Factor:**
Coordinate Datum: NAD 83 (CONUS) **Coordinate Units:** U.S. Survey Feet

* Persons using this information are cautioned that the materials shown are determined by the equipment noted and accuracy of the "log of materials" is limited thereby and by judgement of the operator. THIS INFORMATION IS FOR DESIGN PURPOSES ONLY.

LETTER BOREHOLE - MODOT 20150728.GDT - 11/21/19 12:25 - Z:\SG\GINT\PROJECT FILES\J7S3205-A8871.GPJ

Missouri Department of Transportation
Construction and Materials

BORING NO. V-19-119
Page 2 of 2

Job No.: J7S3205	**County:** Polk	**Route:** 123
Design: A8871	**Skew:** 25° RA	**Location:** Over Barren Creek
Bent: 2	**Logged By:** Duncan Noack	**Operator:** Casey Williams
Station: 52+49.3	**Northing:** 650601.2	**Date of Work:** 10/02/19-10/09/19
Offset: 10.0 R	**Easting:** 1332399.8	**Depth to Water:**
Elevation: 938.7	**Requested Northing:**	**Depth Hole Open:**
Requested Station:	**Requested Easting:**	**Time Change:**
Requested Offset:	**Equipment:** Acker Renegade ,Split-Spoon Sampler, NQ	
Requested Elevation:	**Location Note:**	
Drill No.: G-9667	**Hammer Efficiency:** 76%	**Drilling Method:** Continuous Flight Auger

Depth (ft)	Graphic	Description	Elevation (ft)	Sample Type	REC % (RQD %)	Blow Counts (N_{60})	Shear Data	Field Tests	Index Tests
40							pcf		
		36.1-66.1' Limestone, light gray, thin bedded, medium hard to hard, slightly weathered *(continued)*	895		100 (80)		Qu Test Results UCS = 1530 ksf MC = 0% γ_{moist} = 166.9 pcf		
45			890		100 (82)		Qu Test Results UCS = 790 ksf MC = 0% γ_{moist} = 143.4 pcf		
50			885		100 (66)		Qu Test Results UCS = 1580 ksf MC = 0% γ_{moist} = 157.1 pcf		
55			880		100 (92)		Qu Test Results UCS = 1240 ksf MC = 0% γ_{moist} = 158.6 pcf		
60			875		100 (88)		Qu Test Results UCS = 976 ksf MC = 0% γ_{moist} = 154.2 pcf		
65		Bottom of borehole at 66.1 feet.							

N_{60} = (Em/60)Nm N_{60} - Corrected N value for standard 60% SPT efficiency; Em - Measured hammer efficiency in percent; Nm - Observed N-value
(1) = Assumed, (2) = Actual

Coordinate System: U.S. State Plane 1983 **Coordinate Zone:** Missouri Central **Coordinate Proj. Factor:**
Coordinate Datum: NAD 83 (CONUS) **Coordinate Units:** U.S. Survey Feet

* Persons using this information are cautioned that the materials shown are determined by the equipment noted and accuracy of the "log of materials" is limited thereby and by judgement of the operator. THIS INFORMATION IS FOR DESIGN PURPOSES ONLY.

LETTER BOREHOLE - MODOT 20150728.GDT - 11/21/19 12:25 - Z:\SG\GINT\PROJECT FILES\J7S3205-A8871.GPJ

STATE OF MISSOURI
MARK EUGENE DOERFLINGER
NUMBER E-26002
REGISTERED PROFESSIONAL ENGINEER
THIS SHEET HAS BEEN SIGNED, SEALED AND DATED ELECTRONICALLY.

DATE PREPARED	
6/11/2020	
ROUTE 123	STATE MO
DISTRICT BR	SHEET NO. 27
COUNTY POLK	
JOB NO. J7S3205	
CONTRACT ID.	
PROJECT NO.	
BRIDGE NO. A8871	

DESCRIPTION | DATE

MISSOURI HIGHWAYS AND TRANSPORTATION COMMISSION
105 WEST CAPITOL
JEFFERSON CITY, MO 65102
1-888-ASK-MODOT (1-888-275-6636)

IF A SEAL IS PRESENT ON THIS SHEET IT HAS BEEN ELECTRONICALLY SEALED AND DATED.

TREKK DESIGN GROUP, LLC
1411 East 104th St.
Kansas City, MO 64131
Tel (816) 874-4655
Fax (816) 874-4675
www.trekkdesigngroup.com
Missouri Cert. of Authority 2002010300

BORING DATA

NOTE: For locations of borings, see Sheet No. 1

Detailed Jan 2020
Checked Jan 2020

Note: This drawing is not to scale. Follow dimensions.

B_A8871_027_J7S3205_borings_004.dgn 1:29:42 PM 6/11/2020

Missouri Department of Transportation
Construction and Materials

BORING NO. V-19-120
Page 1 of 2

Job No.: J7S3205 **County:** Polk **Route:** 123
Design: A8871 **Skew:** 25° RA **Location:** Over Barren Creek
Bent: 1 **Logged By:** Matthew Kraus **Operator:** Kenny Mathews
Station: 51+23.2 **Northing:** 650726.5 **Date of Work:** 10/09/19-10/09/19
Offset: 6.0 L **Easting:** 1332420.6 **Depth to Water:**
Elevation: 943.2 **Requested Northing:** **Depth Hole Open:**
Requested Station: **Requested Easting:** **Time Change:**
Requested Offset: **Equipment:** Acker Renegade ,Split-Spoon Sampler, NX
Requested Elevation: **Location Note:**
Drill No.: G-9667 **Hammer Efficiency:** 76% **Drilling Method:** Hollow Stem Auger

Depth (ft)	Graphic	Description	Elevation (ft)	Sample Type	REC % (RQD %)	Blow Counts (N_{60})	Shear Data	Field Tests	Index Tests
0		0.0-0.3' ASPHALT							
		0.3-0.6' CRUSHED AGGREGATE BASE							
		0.6-6.7' Reddish brown, GRAVELLY LEAN CLAY, medium stiff, moist	940						
5					13	3-2-2 (5)			
		6.7-20.5' Red, GRAVELLY FAT CLAY, stiff, moist	935						
10					80	3-3-4 (9)		PP = 1.25 tsf	
			930						
15					73	5-3-4 (9)		PP = 1.50 tsf	
			925						
20		20.5-21.5' Limestone, highly weathered			33	4-16-22 (48)			
		21.5-41.7' Limestone, light whitish gray, thin bedded, moderately hard, slightly weathered, fine grained	920		100 (88)		Qu Tes: Results UCS = 1770 ksf MC = 0% γ_{moist} = 166.2 pcf		
25			915		100 (100)		Qu Tes: Results UCS = 1370 ksf MC = 0% γ_{moist} = 164.8 pcf		
30			910		100 (100)		Qu Tes: Results UCS = 1660 ksf MC = 0% γ_{moist} = 165.3 pcf		
35			905		100 (86)		Qu Tes: Results UCS = 1450 ksf MC = 0% γ_{moist} = 164.8		
40									

N_{60} = (Em/60)Nm N_{60} - Corrected N value for standard 60% SPT efficiency; Em - Measured hammer efficiency in percent; Nm - Observed N-value
(1) = Assumed, (2) = Actual

Coordinate System: U.S. State Plane 1983 **Coordinate Zone:** Missouri Central **Coordinate Proj. Factor:**
Coordinate Datum: NAD 83 (CONUS) **Coordinate Units:** U.S. Survey Feet

* Persons using this information are cautioned that the materials shown are determined by the equipment noted and accuracy of the "log of materials" is limited thereby and by judgement of the operator. THIS INFORMATION IS FOR DESIGN PURPOSES ONLY.

LETTER BOREHOLE - MODOT 20150728.GDT - 11/21/19 12:25 - Z:\SG\GINT\PROJECT FILES\J7S3205-A8871.GPJ

Missouri Department of Transportation
Construction and Materials

BORING NO. V-19-120
Page 2 of 2

Job No.: J7S3205 **County:** Polk **Route:** 123
Design: A8871 **Skew:** 25° RA **Location:** Over Barren Creek
Bent: 1 **Logged By:** Matthew Kraus **Operator:** Kenny Mathews
Station: 51+23.2 **Northing:** 650726.5 **Date of Work:** 10/09/19-10/09/19
Offset: 6.0 L **Easting:** 1332420.6 **Depth to Water:**
Elevation: 943.2 **Requested Northing:** **Depth Hole Open:**
Requested Station: **Requested Easting:** **Time Change:**
Requested Offset: **Equipment:** Acker Renegade ,Split-Spoon Sampler, NX
Requested Elevation: **Location Note:**
Drill No.: G-9667 **Hammer Efficiency:** 76% **Drilling Method:** Hollow Stem Auger

Depth (ft)	Graphic	Description	Elevation (ft)	Sample Type	REC % (RQD %)	Blow Counts (N_{60})	Shear Data	Field Tests	Index Tests
40							pcf		
		41.7-42.2' Void							
		42.2-51.5' Limestone, light whitish gray, thin bedded, moderately hard to medium hard, slightly weathered to moderately weathered, fine grained, vuggy	900		86 (66)		Qu Test Results UCS = 1370 ksf MC = 0% γ_{moist} = 164.9 pcf		
45			895		100 (24)		Qu Test Results UCS = 818 ksf MC = 0% γ_{moist} = 151.4 pcf		
50		Bottom of borehole at 51.5 feet.							

N_{60} = (Em/60)Nm N_{60} - Corrected N value for standard 60% SPT efficiency; Em - Measured hammer efficiency in percent; Nm - Observed N-value
(1) = Assumed, (2) = Actual

Coordinate System: U.S. State Plane 1983 **Coordinate Zone:** Missouri Central **Coordinate Proj. Factor:**
Coordinate Datum: NAD 83 (CONUS) **Coordinate Units:** U.S. Survey Feet

* Persons using this information are cautioned that the materials shown are determined by the equipment noted and accuracy of the "log of materials" is limited thereby and by judgement of the operator. THIS INFORMATION IS FOR DESIGN PURPOSES ONLY.

LETTER BOREHOLE - MODOT 20150728.GDT - 11/21/19 12:25 - Z:\SG\GINT\PROJECT FILES\J7S3205-A8871.GPJ

BORING DATA

NOTE: For locations of borings, see Sheet No. 1

STATE OF MISSOURI
MARK EUGENE DOERFLINGER
NUMBER E-26002
REGISTERED PROFESSIONAL ENGINEER
THIS SHEET HAS BEEN SIGNED, SEALED AND DATED ELECTRONICALLY.

IF A SEAL IS PRESENT ON THIS SHEET IT HAS BEEN ELECTRONICALLY SEALED AND DATED.

DATE PREPARED	
6/11/2020	
ROUTE 123	STATE MO
DISTRICT BR	SHEET NO. 28
COUNTY POLK	
JOB NO. J7S3205	
CONTRACT ID.	
PROJECT NO.	
BRIDGE NO. A8871	

DESCRIPTION | DATE

MISSOURI HIGHWAYS AND TRANSPORTATION COMMISSION
105 WEST CAPITOL
JEFFERSON CITY, MO 65102
1-888-ASK-MODOT (1-888-275-6636)

TREKK DESIGN GROUP, LLC
1411 East 104th St.
Kansas City, MO 64131
Tel (816) 874-4655
Fax (816) 874-4675
www.trekkdesigngroup.com
Missouri Cert. of Authority 2002010300

Detailed Jan 2020
Checked Jan 2020

Note: This drawing is not to scale. Follow dimensions.

Detailed Jan 2020
Checked Jan 2020

Missouri Department of Transportation
Construction and Materials

FIGURE 5 - BORING NO. V-19-120

Job No.: J7S3205 **County:** Polk **Route:** 123 **Logged By:** Matthew Kraus
Design: A8871 **Skew:** 25° RA **Coordinate Units:** U.S. Survey Feet **Operator:** Kenny Mathews
Bent: 1 **Location:** Over Barren Creek **Coordinate Proj. Factor:** **Date of Work:** 10/09/19-10/09/19
Station: 51+23.2 **Northing:** 650726.5 **Coordinate System:** U.S. State Plane 1983 **Depth to Water:**
Offset: 6.0 L **Easting:** 1332420.6 **Coordinate Datum:** NAD 83 (CONUS) **Time Change:**
Elevation: 943.2 **Drilling Method:** Hollow Stem Auger **Coordinate Zone:** Missouri Central **Depth Hole Open:**
Drill No.: G-9667 **Hammer Efficiency:** 76% **Equipment:** Acker Renegade ,Split-Spoon Sampler, NX

Depth (ft)	Graphic	Description	Elevation (ft)	Scour Parameters: Compressible	Downdrag	Scour	Total Unit Weight (pcf)	Effective Unit Weight (pcf)	Undrained Shear Strength Su or c (psf)	Pocket Pen (tsf)	Torvane (tsf)	Blow Counts (N_{60})	Internal Friction Angle	Soil/Rock Strain (ε_{50}/K_{rm})	Lateral Subgrade Modulus K_r (pci)	Young's Modulus E_r (ksf)	Rock Quality Designation (RQD) (%)	Unconfined Compressive Strength Qu (ksf)
0		0 - 6.7' Soft clay	940	yes	no	yes												
							113(1)	113(1)	625(1)			3-2-2 (5)		0.015	65			
		6.7 - 20.5' Stiff clay without free water																
10							121(1)	121(1)	1250(1)	1.25		3-3-4 (9)		0.008	300			
			930	yes	no	yes												
							121(1)	121(1)	1250(1)	1.5		5-3-4 (9)		0.008	300			
20																		
		20.5 - 51.5' Strong rock					130(1)	68(1)	6000(1)			4-16-22 (48)		0.004	2000			
			920				160(1)	98(1)										
							166.2(2)	104(2)									88	1770
30				no	no	no	164.8(2)	102(2)									100	1370
			910				165.3(2)	103(2)									100	1660
40		*(Continued Next Page)*					164.8(2)	102(2)									86	1450

(1) = Assumed, (2) = Actual, (3) = Phi' 0, (PP) = Pocket Penetrometer

Missouri Department of Transportation
Construction and Materials

FIGURE 5 - BORING NO. V-19-120

Job No.: J7S3205 **County:** Polk **Route:** 123 **Logged By:** Matthew Kraus
Design: A8871 **Skew:** 25° RA **Coordinate Units:** U.S. Survey Feet **Operator:** Kenny Mathews
Bent: 1 **Location:** Over Barren Creek **Coordinate Proj. Factor:** **Date of Work:** 10/09/19-10/09/19
Station: 51+23.2 **Northing:** 650726.5 **Coordinate System:** U.S. State Plane 1983 **Depth to Water:**
Offset: 6.0 L **Easting:** 1332420.6 **Coordinate Datum:** NAD 83 (CONUS) **Time Change:**
Elevation: 943.2 **Drilling Method:** Hollow Stem Auger **Coordinate Zone:** Missouri Central **Depth Hole Open:**
Drill No.: G-9667 **Hammer Efficiency:** 76% **Equipment:** Acker Renegade ,Split-Spoon Sampler, NX

Depth (ft)	Graphic	Description	Elevation (ft)	Scour Parameters: Compressible	Downdrag	Scour	Total Unit Weight (pcf)	Effective Unit Weight (pcf)	Undrained Shear Strength Su or c (psf)	Pocket Pen (tsf)	Torvane (tsf)	Blow Counts (N_{60})	Internal Friction Angle	Soil/Rock Strain (ε_{50}/K_{rm})	Lateral Subgrade Modulus K_r (pci)	Young's Modulus E_r (ksf)	Rock Quality Designation (RQD) (%)	Unconfined Compressive Strength Qu (ksf)
40		20.5 - 51.5' Strong rock *(continued)*																
			900				164.9(2)	103(2)									66	1370
				no	no	no												
50							151.4(2)	89(2)									24	818
		Bottom of borehole at 51.5 feet.																

(1) = Assumed, (2) = Actual, (3) = Phi' 0, (PP) = Pocket Penetrometer

LPILE SUMMARY - MODOT_2015812.GDT - 11/15/19 15:23 - Z:\SIGIGNT\PROJECT FILES\J7S3205-A8871.GPJ

Note: This drawing is not to scale. Follow dimensions.

NOTE: For locations of borings, see Sheet No. 1

BORING DATA

TREKK DESIGN GROUP, LLC
1411 East 104th St.
Kansas City, MO 64131
Tel (816) 874-4655
Fax (816) 874-4675
www.trekkdesigngroup.com
Missouri Cert. of Authority 2002010300

MISSOURI HIGHWAYS AND TRANSPORTATION COMMISSION
MoDOT
105 WEST CAPITOL
JEFFERSON CITY, MO 65102
1-888-ASK-MODOT (1-888-275-6636)

DATE	DESCRIPTION

BRIDGE NO. A8871
PROJECT NO.
JOB NO. J7S3205
CONTRACT ID.
COUNTY POLK
DISTRICT BR
SHEET NO. 29
ROUTE 123
STATE MO
DATE PREPARED 6/11/2020

STATE OF MISSOURI
MARK EUGENE DONAGHEY
E-26002
PROFESSIONAL ENGINEER

IF A SEAL IS PRESENT ON THIS SHEET IT HAS BEEN ELECTRONICALLY SEALED AND DATED.

Missouri Department of Transportation
Construction and Materials

BORING NO. V-19-121
Page 1 of 2

Job No.: J7S3205 **County:** Polk **Route:** 123
Design: A8871 **Skew:** 25° RA **Location:** Over Barren Creek
Bent: 2 **Logged By:** Matthew Kraus **Operator:** Gary Degraffenreid
Station: 52+37.2 **Northing:** 650610 **Date of Work:** 10/15/19-10/17/19
Offset: 13.0 L **Easting:** 1332422.3 **Depth to Water:**
Elevation: 938.6 **Requested Northing:** **Depth Hole Open:**
Requested Station: **Requested Easting:** **Time Change:**
Requested Offset: **Equipment:** Acker Renegade ,Split-Spoon Sampler, NX
Requested Elevation: **Location Note:**
Drill No.: G-9667 **Hammer Efficiency:** 76% **Drilling Method:** Continuous Flight Auger

Depth (ft)	Graphic	Description	Elevation (ft)	Sample Type	REC % (RQD %)	Blow Counts (N_{60})	Shear Data	Field Tests	Index Tests
0		0.0-3.1' Brownish gray, SANDY LEAN CLAY trace gravel, stiff, moist							
		3.1-19.8' Reddish brown, GRAVELLY LEAN CLAY, medium stiff to very stiff, moist	935						
5					39	6-2-2 (5)			
			930						
10					33	3-3-5 (10)			
			925						
15					39	5-9-10 (24)			
			920						
20		19.8-35.3' Brown, GRAVELLY FAT CLAY with sand, very soft, wet			6	0-0-0 (0)			
			915						
25					22	0-0-0 (0)			LL = 56 PL = 23
			910						
30					72	0-0-0 (0)			
			905						
35		35.3-37.5' Brown, SAND, very loose, wet			72	0-0-0 (0)			
		37.5-67.5' Cherty Limestone, gray, thick bedded, medium hard to moderately hard, slightly weathered, fine grained	900		100		Qu Tes: Results UCS = 748 ksf		
40									

N_{60} = (Em/60)Nm N_{60} - Corrected N value for standard 60% SPT efficiency; Em - Measured hammer efficiency in percent; Nm - Observed N-value
(1) = Assumed, (2) = Actual

Coordinate System: U.S. State Plane 1983 **Coordinate Zone:** Missouri Central **Coordinate Proj. Factor:**
Coordinate Datum: NAD 83 (CONUS) **Coordinate Units:** U.S. Survey Feet

* Persons using this information are cautioned that the materials shown are determined by the equipment noted and accuracy of the "log of materials" is limited thereby and by judgement of the operator. THIS INFORMATION IS FOR DESIGN PURPOSES ONLY.

LETTER BOREHOLE - MODOT 20150728.GDT - 11/21/19 12:25 - Z:\SG\GINT\PROJECT FILES\J7S3205-A8871.GPJ

Missouri Department of Transportation
Construction and Materials

BORING NO. V-19-121
Page 2 of 2

Job No.: J7S3205 **County:** Polk **Route:** 123
Design: A8871 **Skew:** 25° RA **Location:** Over Barren Creek
Bent: 2 **Logged By:** Matthew Kraus **Operator:** Gary Degraffenreid
Station: 52+37.2 **Northing:** 650610 **Date of Work:** 10/15/19-10/17/19
Offset: 13.0 L **Easting:** 1332422.3 **Depth to Water:**
Elevation: 938.6 **Requested Northing:** **Depth Hole Open:**
Requested Station: **Requested Easting:** **Time Change:**
Requested Offset: **Equipment:** Acker Renegade ,Split-Spoon Sampler, NX
Requested Elevation: **Location Note:**
Drill No.: G-9667 **Hammer Efficiency:** 76% **Drilling Method:** Continuous Flight Auger

Depth (ft)	Graphic	Description	Elevation (ft)	Sample Type	REC % (RQD %)	Blow Counts (N_{60})	Shear Data	Field Tests	Index Tests
40		37.5-67.5' Cherty Limestone, gray, thick bedded, medium hard to moderately hard, slightly weathered, fine grained *(continued)*			(98)		MC = 0% γ_{moist} = 153.7 pcf		
			895						
45					100 (70)		Qu Test Results UCS = 1000 ksf MC = 0% γ_{moist} = 163.4 pcf		
			890						
50					100 (92)		Qu Test Results UCS = 748 ksf MC = 0% γ_{moist} = 152.1 pcf		
			885						
55					100 (80)		Qu Test Results UCS = 1230 ksf MC = 0% γ_{moist} = 160.9 pcf		
			880						
60					100 (80)		Qu Test Results UCS = 650 ksf MC = 0% γ_{moist} = 153.4 pcf		
			875						
65					70 (70)				
		Bottom of borehole at 67.5 feet.							

N_{60} = (Em/60)Nm N_{60} - Corrected N value for standard 60% SPT efficiency; Em - Measured hammer efficiency in percent; Nm - Observed N-value
(1) = Assumed, (2) = Actual

Coordinate System: U.S. State Plane 1983 **Coordinate Zone:** Missouri Central **Coordinate Proj. Factor:**
Coordinate Datum: NAD 83 (CONUS) **Coordinate Units:** U.S. Survey Feet

* Persons using this information are cautioned that the materials shown are determined by the equipment noted and accuracy of the "log of materials" is limited thereby and by judgement of the operator. THIS INFORMATION IS FOR DESIGN PURPOSES ONLY.

LETTER BOREHOLE - MODOT 20150728.GDT - 11/21/19 12:25 - Z:\SG\GINT\PROJECT FILES\J7S3205-A8871.GPJ

BORING DATA

NOTE: For locations of borings, see Sheet No. 1

STATE OF MISSOURI
MARK EUGENE DOERFLINGER
NUMBER E-26002
REGISTERED PROFESSIONAL ENGINEER
THIS SHEET HAS BEEN SEALED, SEALED AND DATED ELECTRONICALLY.

IF A SEAL IS PRESENT ON THIS SHEET IT HAS BEEN ELECTRONICALLY SEALED AND DATED.

DATE PREPARED	
6/11/2020	
ROUTE 123	STATE MO
DISTRICT BR	SHEET NO. 30
COUNTY POLK	
JOB NO. J7S3205	
CONTRACT ID.	
PROJECT NO.	
BRIDGE NO. A8871	

DESCRIPTION | DATE

MISSOURI HIGHWAYS AND TRANSPORTATION COMMISSION
105 WEST CAPITOL
JEFFERSON CITY, MO 65102
1-888-ASK-MODOT (1-888-275-6636)

TREKK DESIGN GROUP, LLC
1411 East 104th St.
Kansas City, MO 64131
Tel (816) 874-4655
Fax (816) 874-4675
www.trekkdesigngroup.com
Missouri Cert. of Authority 2002010300

Detailed Jan 2020
Checked Jan 2020

Note: This drawing is not to scale. Follow dimensions.

B_A8871_030_J7S3205_borings_007.dgn 1:33:05 PM 6/11/2020

Detailed Jan 2020
Checked Jan 2020

Missouri Department of Transportation
Construction and Materials

FIGURE 7 - BORING NO. V-19-121

Job No.: J7S3205
Design: A8871
Bent: 2
Station: 52+37.2
Offset: 13.0 L
Elevation: 938.6
Drill No.: G-9667

County: Polk
Skew: 25° RA
Location: Over Barren Creek
Northing: 650610
Easting: 1332422.3
Drilling Method: Continuous Flight Auger
Hammer Efficiency: 76%

Route: 123
Coordinate Units: U.S. Survey Feet
Coordinate Proj. Factor:
Coordinate System: U.S. State Plane 1983
Coordinate Datum: NAD 83 (CONUS)
Coordinate Zone: Missouri Central
Equipment: Acker Renegade ,Split-Spoon Sampler, NX

Logged By: Matthew Kraus
Operator: Gary Degraffenreid
Date of Work: 10/15/19-10/17/19
Depth to Water:
Time Change:
Depth Hole Open:

Depth (ft)	Graphic	Description	Elevation (ft)	Scour Parameters: Compressible	Downdrag	Scour	Total Unit Weight (pcf)	Effective Unit Weight (pcf)	Undrained Shear Strength Su or c (psf)	Pocket Pen (tsf)	Torvane (tsf)	Blow Counts (N_{60})	Internal Friction Angle ♦	Soil/Rock Strain ($\varepsilon_{50}/\varepsilon_{rm}$)	Lateral Subgrade Modulus K_r (pci)	Young's Modulus E_r (ksf)	Rock Quality Designation (RQD) (%)	Unconfined Compressive Strength Qu (ksf)
0		0 - 3.1' Stiff clay without free water		yes	no	yes	123(1)	123(1)	1500(1)					0.007	500			
		3.1 - 8.3' Soft clay		yes	no	yes	113(1)	113(1)	625(1)			6-2-2 (5)		0.015	65			
			930															
10		8.3 - 19.8' Stiff clay without free water		yes	no	yes	122(1)	122(1)	1250(1)			3-3-5 (10)		0.008	400			
							128(1)	128(1)	3000(1)			5-9-10 (24)		0.005	1000			
		V(1)	920															
20		19.8 - 35.3' Soft clay		yes	no	yes	100(1)	38(1)				0-0-0 (0)		0.02	30			
							100(1)	38(1)				0-0-0 (0)		0.02	30			
			910															
30							100(1)	38(1)				0-0-0 (0)		0.02	30			
		35.3 - 37.5' Sand		no	no	yes	70(1)	8(1)				0-0-0 (0)	25(1)		20			
		37.5 - 67.5' Strong rock	900	no	no	no	160(1)	98(1)										
40		*(Continued Next Page)*																

(1) = Assumed, (3) = Phi' 0, (PP) = Pocket Penetrometer

Missouri Department of Transportation
Construction and Materials

FIGURE 7 - BORING NO. V-19-121

Job No.: J7S3205
Design: A8871
Bent: 2
Station: 52+37.2
Offset: 13.0 L
Elevation: 938.6
Drill No.: G-9667

County: Polk
Skew: 25° RA
Location: Over Barren Creek
Northing: 650610
Easting: 1332422.3
Drilling Method: Continuous Flight Auger
Hammer Efficiency: 76%

Route: 123
Coordinate Units: U.S. Survey Feet
Coordinate Proj. Factor:
Coordinate System: U.S. State Plane 1983
Coordinate Datum: NAD 83 (CONUS)
Coordinate Zone: Missouri Central
Equipment: Acker Renegade ,Split-Spoon Sampler, NX

Logged By: Matthew Kraus
Operator: Gary Degraffenreid
Date of Work: 10/15/19-10/17/19
Depth to Water:
Time Change:
Depth Hole Open:

Depth (ft)	Graphic	Description	Elevation (ft)	Scour Parameters: Compressible	Downdrag	Scour	Total Unit Weight (pcf)	Effective Unit Weight (pcf)	Undrained Shear Strength Su or c (psf)	Pocket Pen (tsf)	Torvane (tsf)	Blow Counts (N_{60})	Internal Friction Angle ♦	Soil/Rock Strain ($\varepsilon_{50}/\varepsilon_{rm}$)	Lateral Subgrade Modulus K_r (pci)	Young's Modulus E_r (ksf)	Rock Quality Designation (RQD) (%)	Unconfined Compressive Strength Qu (ksf)
40		37.5 - 67.5' Strong rock *(continued)*		no	no	no	153.7(2)	91(2)									98	748
							163.4(2)	101(2)									70	1000
			890															
50							152.1(2)	90(2)									92	748
							160.9(2)	99(2)									80	1230
			880															
60							153.4(2)	91(2)									80	650
																	70	
		Bottom of borehole at 67.5 feet.																

(1) = Assumed, (2) = Actual, (3) = Phi' 0, (PP) = Pocket Penetrometer

LPILE SUMMARY - MODOT_2015012.GDT - 11/15/19 15:23 - Z:\SIGNT\PROJECT FILES\J7S3205-A8871.GPJ

Note: This drawing is not to scale. Follow dimensions.

NOTE: For locations of borings, see Sheet No. 1

BORING DATA

TREKK DESIGN GROUP, LLC
1411 East 104th St.
Kansas City, MO 64131
Tel (816) 874-4655
Fax (816) 874-4675
www.trekkdesigngroup.com
Missouri Cert. of Authority 2002010300

MISSOURI HIGHWAYS AND TRANSPORTATION COMMISSION
MoDOT
105 WEST CAPITOL
JEFFERSON CITY, MO 65102
1-888-ASK-MODOT (1-888-275-6636)

DATE	DESCRIPTION

BRIDGE NO. A8871
PROJECT NO.
CONTRACT ID.
JOB NO. J7S3205
COUNTY POLK
DISTRICT BR
SHEET NO. 31
ROUTE 123
STATE MO
DATE PREPARED 6/11/2020

STATE OF MISSOURI
BRYAN EUGENE MARK
NUMBER E-23002
PROFESSIONAL ENGINEER

IF A SEAL IS PRESENT ON THIS SHEET IT HAS BEEN ELECTRONICALLY SEALED AND DATED.

Missouri Department of Transportation
Construction and Materials

BORING NO. V-19-123
Page 1 of 2

Job No.: J7S3205 **County:** Polk **Route:** 123
Design: A8871 **Skew:** 25° RA **Location:** Over Barren Creek
Bent: 2 **Logged By:** Ricardo Todd **Operator:** Gary Degraffenreid
Station: 52+37.19 **Northing:** 650613.7 **Date of Work:** 10/21/19-10/21/19
Offset: 6.0 L **Easting:** 1332414.3 **Depth to Water:**
Elevation: 938.6 **Requested Northing:** **Depth Hole Open:**
Requested Station: **Requested Easting:** **Time Change:**
Requested Offset: **Equipment:** Acker Renegade ,Split-Spoon Sampler, NX
Requested Elevation: **Location Note:**
Drill No.: G-9667 **Hammer Efficiency:** 76% **Drilling Method:** Continuous Flight Auger

Depth (ft)	Graphic	Description	Elevation (ft)	Sample Type	REC % (RQD %)	Blow Counts (N_{60})	Shear Data	Field Tests	Index Tests
0		0.0-0.8' ASPHALT							
		0.8-11.7' Dark gray, GRAVELLY LEAN CLAY trace sand, stiff to very stiff, moist	935						
5									
			930						
10					67	3-7-8 (19)			
		11.7-22.2' Brown, GRAVEL with sand, loose, wet, fine grained	925						
15									
			920						
20					67	2-2-2 (5)			
		22.2-37.7' Gray, SAND, very loose, wet, fine grained	915						
25									
			910						
30					72	0-0-0 (0)			
			905						
35									
		37.7-38.8' Limestone, highly weathered	900						
40									

N_{60} = (Em/60)Nm N_{60} - Corrected N value for standard 60% SPT efficiency; Em - Measured hammer efficiency in percent; Nm - Observed N-value
(1) = Assumed, (2) = Actual

Coordinate System: U.S. State Plane 1983 **Coordinate Zone:** Missouri Central **Coordinate Proj. Factor:**
Coordinate Datum: NAD 83 (CONUS) **Coordinate Units:** U.S. Survey Feet

* Persons using this information are cautioned that the materials shown are determined by the equipment noted and accuracy of the "log of materials" is limited thereby and by judgement of the operator. THIS INFORMATION IS FOR DESIGN PURPOSES ONLY.

LETTER BOREHOLE - MODOT 20150728.GDT - 11/21/19 12:25 - Z:\SGG\INT\PROJECT FILES\J7S3205-A8871.GPJ

Missouri Department of Transportation
Construction and Materials

BORING NO. V-19-123
Page 2 of 2

Job No.: J7S3205 **County:** Polk **Route:** 123
Design: A8871 **Skew:** 25° RA **Location:** Over Barren Creek
Bent: 2 **Logged By:** Ricardo Todd **Operator:** Gary Degraffenreid
Station: 52+37.19 **Northing:** 650613.7 **Date of Work:** 10/21/19-10/21/19
Offset: 6.0 L **Easting:** 1332414.3 **Depth to Water:**
Elevation: 938.6 **Requested Northing:** **Depth Hole Open:**
Requested Station: **Requested Easting:** **Time Change:**
Requested Offset: **Equipment:** Acker Renegade ,Split-Spoon Sampler, NX
Requested Elevation: **Location Note:**
Drill No.: G-9667 **Hammer Efficiency:** 76% **Drilling Method:** Continuous Flight Auger

Depth (ft)	Graphic	Description	Elevation (ft)	Sample Type	REC % (RQD %)	Blow Counts (N_{60})	Shear Data	Field Tests	Index Tests
40		38.8-48.8' Cherty Limestone, gray, medium bedded to thin bedded, medium hard to moderately hard, slightly weathered, fine grained, vuggy *(continued)*	895		100 (80)		Qu Test Results UCS = 1210 ksf MC = 0% γ_{moist} = 164.3 pcf		
45			890		100 (80)		Qu Test Results UCS = 1140 ksf MC = 0% γ_{moist} = 151.3 pcf		
		Bottom of borehole at 48.8 feet.							

N_{60} = (Em/60)Nm N_{60} - Corrected N value for standard 60% SPT efficiency; Em - Measured hammer efficiency in percent; Nm - Observed N-value
(1) = Assumed, (2) = Actual

Coordinate System: U.S. State Plane 1983 **Coordinate Zone:** Missouri Central **Coordinate Proj. Factor:**
Coordinate Datum: NAD 83 (CONUS) **Coordinate Units:** U.S. Survey Feet

* Persons using this information are cautioned that the materials shown are determined by the equipment noted and accuracy of the "log of materials" is limited thereby and by judgement of the operator. THIS INFORMATION IS FOR DESIGN PURPOSES ONLY.

LETTER BOREHOLE - MODOT 20150728.GDT - 11/21/19 12:25 - Z:\SGG\INT\PROJECT FILES\J7S3205-A8871.GPJ

STATE OF MISSOURI
MARK EUGENE DOERFLINGER
NUMBER E-26002
REGISTERED PROFESSIONAL ENGINEER
THIS SHEET HAS BEEN SIGNED, SEALED AND DATED ELECTRONICALLY.

DATE PREPARED 6/11/2020
ROUTE 123 STATE MO
DISTRICT BR SHEET NO. 32
COUNTY POLK
JOB NO. J7S3205
CONTRACT ID.
PROJECT NO.
BRIDGE NO. A8871

DESCRIPTION
DATE

MISSOURI HIGHWAYS AND TRANSPORTATION COMMISSION
105 WEST CAPITOL
JEFFERSON CITY, MO 65102
1-888-ASK-MODOT (1-888-275-6636)

IF A SEAL IS PRESENT ON THIS SHEET IT HAS BEEN ELECTRONICALLY SEALED AND DATED.

TREKK DESIGN GROUP, LLC
1411 East 104th St.
Kansas City, MO 64131
Tel (816) 874-4655
Fax (816) 874-4675
www.trekkdesigngroup.com
Missouri Cert. of Authority 2002010300

BORING DATA

NOTE: For locations of borings, see Sheet No. 1

Detailed Jan 2020
Checked Jan 2020

Note: This drawing is not to scale. Follow dimensions.

Missouri Department of Transportation
1617 Missouri Boulevard
Jefferson City, Missouri 65109

FIGURE 2 - CL SUBSURFACE DIAGRAM - STATION

PROJECT NAME A8871
PROJECT LOCATION Over Barren Creek
CLIENT MoDOT Bridge Division/SW District
PROJECT NUMBER J7S3205

Asphalt
USCS Low Plasticity Gravelly Clay
USCS High Plasticity Gravelly Clay
Boulders and cobbles
USCS Clayey Gravel
Highly Weathered Limestone
No Core
USCS Low Plasticity Clay
USCS High Plasticity Clay
Limestone
Shale
USCS Well-graded Gravel

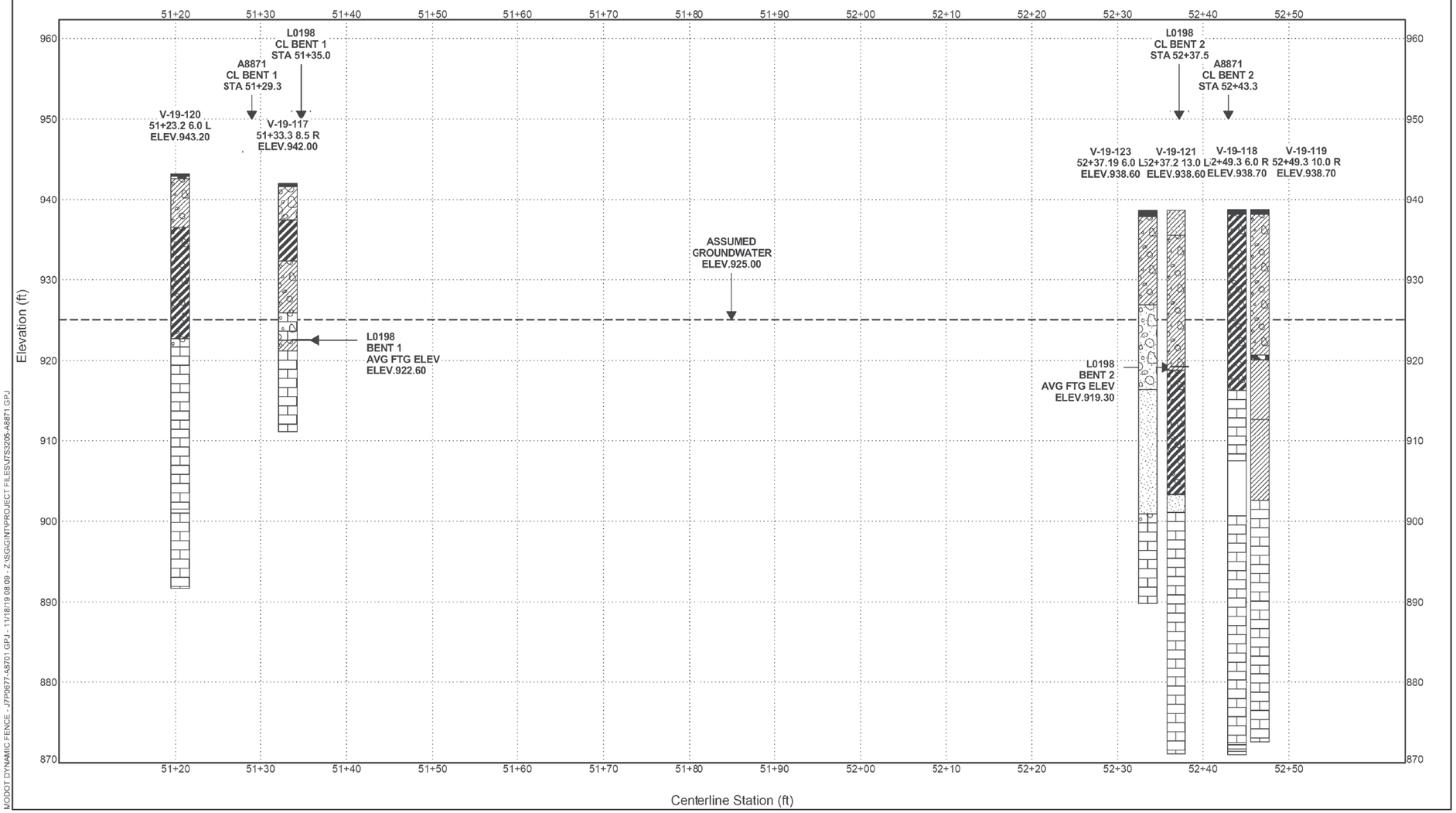

MODOT DYNAMIC FENCE - J7P0677-A8701.GPJ - 11/18/19 08:09 - Z:\SIGIN\PROJECT FILES\J7S3205-A8871.GPJ

BORING DATA

NOTE: For locations of borings, see Sheet No. 1

Detailed Jan 2020
Checked Jan 2020

Note: This drawing is not to scale. Follow dimensions.

STATE OF MISSOURI
MARK EUGENE DOERFLINGER
NUMBER E-26002
REGISTERED PROFESSIONAL ENGINEER
THIS SHEET HAS BEEN SIGNED, SEALED AND DATED ELECTRONICALLY.

DATE PREPARED	6/11/2020
ROUTE	123
STATE	MO
DISTRICT	BR
SHEET NO.	33
COUNTY	POLK
JOB NO.	J7S3205
CONTRACT ID.	
PROJECT NO.	
BRIDGE NO.	A8871

DESCRIPTION
DATE

MISSOURI HIGHWAYS AND TRANSPORTATION COMMISSION
105 WEST CAPITOL
JEFFERSON CITY, MO 65102
1-888-ASK-MODOT (1-888-275-6636)

TREKK DESIGN GROUP, LLC
1411 East 104th St.
Kansas City, MO 64131
Tel: (816) 874-4655
Fax: (816) 874-4675
www.trekkdesigngroup.com
Missouri Cert. of Authority 2002010300

IF A SEAL IS PRESENT ON THIS SHEET IT HAS BEEN ELECTRONICALLY SEALED AND DATED.

Missouri Department of Transportation
1617 Missouri Boulevard
Jefferson City, Missouri 65109

FIGURE 3 - SUBSURFACE DIAGRAM - EQUALLY SPACED

PROJECT NAME A8871
PROJECT LOCATION Over Barren Creek
CLIENT MoDOT Bridge Division/SW District
PROJECT NUMBER J7S3205

Asphalt
USCS Low Plasticity Gravelly Clay
USCS High Plasticity Gravelly Clay
Boulders and cobbles
USCS Clayey Gravel
Highly Weathered Limestone
No Core
USCS Low Plasticity Clay
USCS High Plasticity Clay
Limestone
Shale
USCS Well-graded Gravel

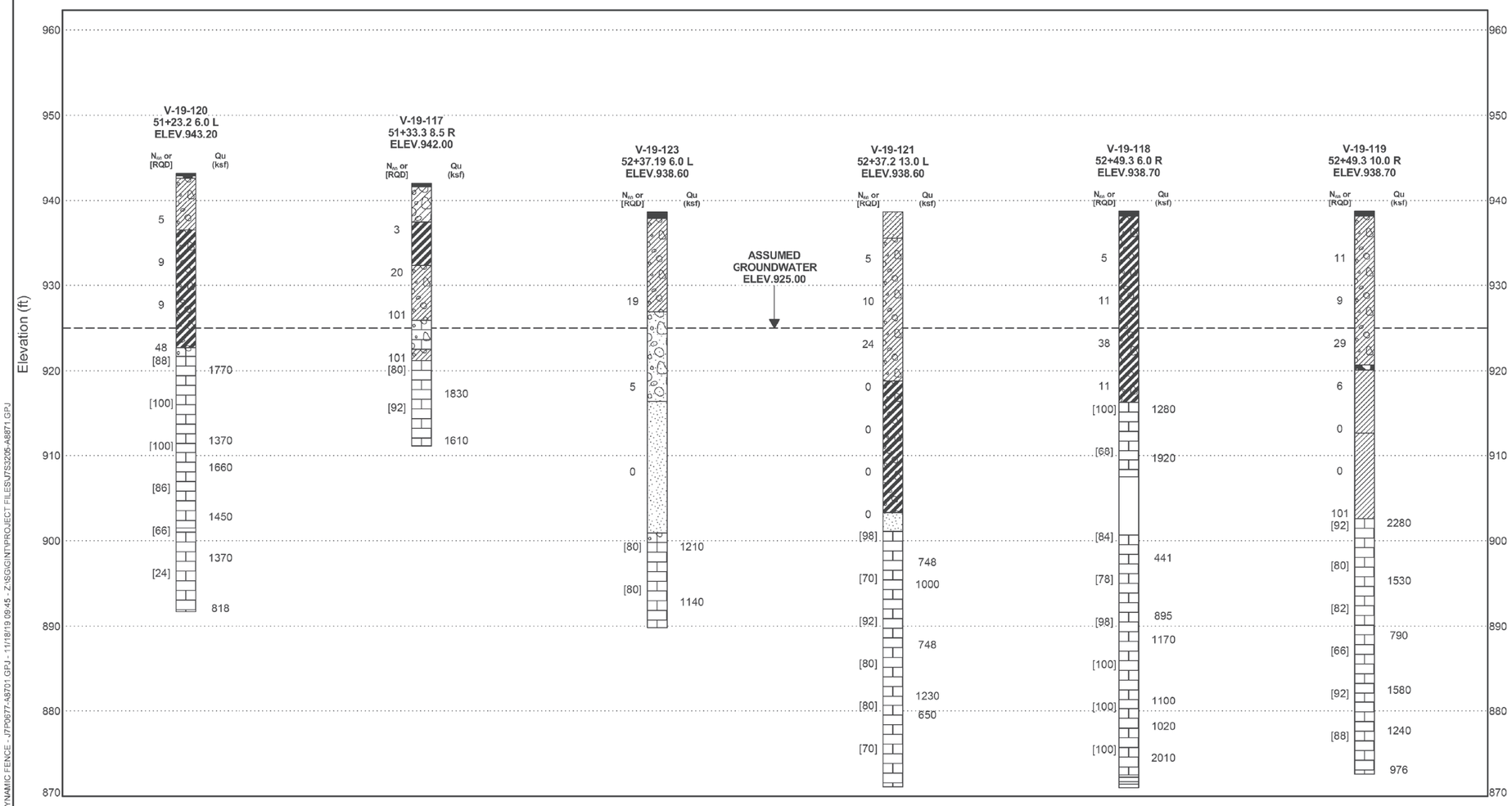

MODOT DYNAMIC FENCE - J7P0677-A8701.GPJ - 11/18/19 09:45 - Z:\SIGN\PROJECT FILES\J7S3205-A8871.GPJ

BORING DATA

NOTE: For locations of borings, see Sheet No. 1

Detailed Jan 2020
Checked Jan 2020

Note: This drawing is not to scale. Follow dimensions.

STATE OF MISSOURI
MARK EUGENE DOERFLINGER
NUMBER E-26002
REGISTERED PROFESSIONAL ENGINEER
THIS SHEET HAS BEEN SIGNED, SEALED AND DATED ELECTRONICALLY.

IF A SEAL IS PRESENT ON THIS SHEET IT HAS BEEN ELECTRONICALLY SEALED AND DATED.

DATE PREPARED	6/11/2020
ROUTE	123
STATE	MO
DISTRICT	BR
SHEET NO.	34
COUNTY	POLK
JOB NO.	J7S3205
CONTRACT ID.	
PROJECT NO.	
BRIDGE NO.	A8871

DESCRIPTION
DATE

MISSOURI HIGHWAYS AND TRANSPORTATION COMMISSION
105 WEST CAPITOL
JEFFERSON CITY, MO 65102
1-888-ASK-MODOT (1-888-275-6636)

TREKK DESIGN GROUP, LLC
1411 East 104th St.
Kansas City, MO 64131
Tel (816) 874-4665
Fax (816) 874-4675
www.trekkdesigngroup.com
Missouri Corp. of Authority 2002010300

Missouri Department of Transportation
1617 Missouri Boulevard
Jefferson City, Missouri 65109

FIGURE 4 - SUBSURFACE DIAGRAM - BENT 1

PROJECT NAME A8871
PROJECT LOCATION Over Barren Creek
CLIENT MoDOT Bridge Division/SW District
PROJECT NUMBER J7S3205

Asphalt
USCS Low Plasticity Gravelly Clay
USCS Well-graded Gravel
USCS Clayey Gravel
Highly Weathered Limestone
USCS High Plasticity Gravelly Clay
USCS High Plasticity Clay
Limestone
No Core

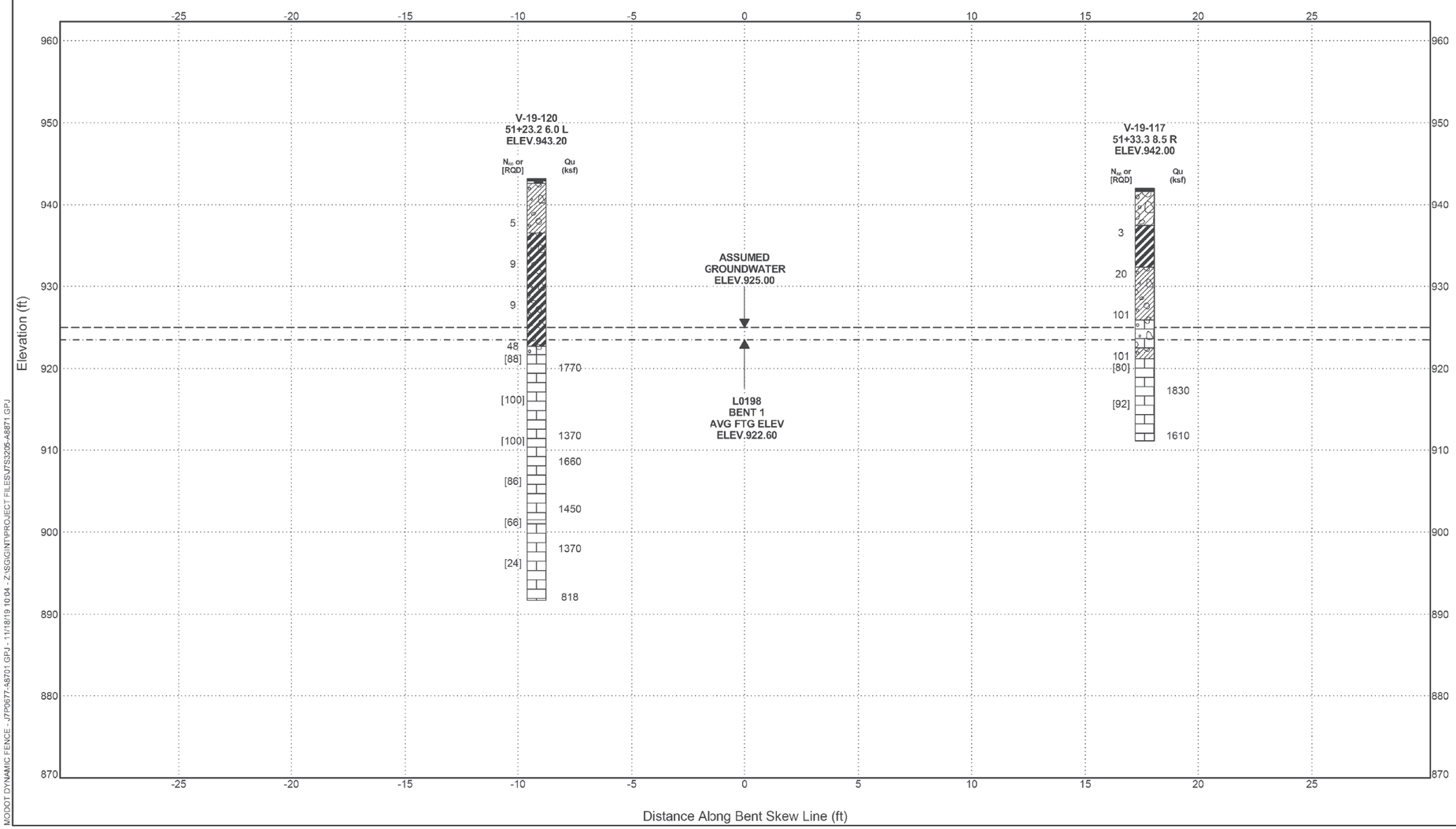

MODOT DYNAMIC FENCE - J7P0677-A8701.GPJ - 11/18/19 10:04 - Z:\SIGIN\PROJECT FILES\J7S3205-A8871.GPJ

BORING DATA

NOTE: For locations of borings, see Sheet No. 1

Detailed Jan 2020
Checked Jan 2020

Note: This drawing is not to scale. Follow dimensions.

STATE OF MISSOURI
MARK EUGENE DOERFLINGER
NUMBER E-26002
REGISTERED PROFESSIONAL ENGINEER
THIS SHEET HAS BEEN SIGNED, SEALED AND DATED ELECTRONICALLY.

DATE PREPARED	6/11/2020
ROUTE	123
STATE	MO
DISTRICT	BR
SHEET NO.	35
COUNTY	POLK
JOB NO.	J7S3205
CONTRACT ID.	
PROJECT NO.	
BRIDGE NO.	A8871

DESCRIPTION
DATE

MISSOURI HIGHWAYS AND TRANSPORTATION COMMISSION
105 WEST CAPITOL
JEFFERSON CITY, MO 65102
1-888-ASK-MODOT (1-888-275-6636)

IF A SEAL IS PRESENT ON THIS SHEET IT HAS BEEN ELECTRONICALLY SEALED AND DATED.

TREKK DESIGN GROUP, LLC
1411 East 104th St.
Kansas City, MO 64131
Tel (816) 874-4655
Fax (816) 874-4675
www.trekkdesigngroup.com
Missouri Cert. of Authority 2002010300

Missouri Department of Transportation
1617 Missouri Boulevard
Jefferson City, Missouri 65109

FIGURE 6 - SUBSURFACE DIAGRAM - BENT 2

PROJECT NAME A8871
PROJECT LOCATION Over Barren Creek
CLIENT MoDOT Bridge Division/SW District
PROJECT NUMBER J7S3205

Asphalt
No Core
Boulders and cobbles
USCS Poorly-graded Sand
USCS High Plasticity Gravelly Clay
Shale
USCS Low Plasticity Clay
USCS Poorly-graded Sandy Gravel
Limestone
USCS Low Plasticity Gravelly Clay
USCS Low Plasticity Sandy Clay
Highly Weathered Limestone

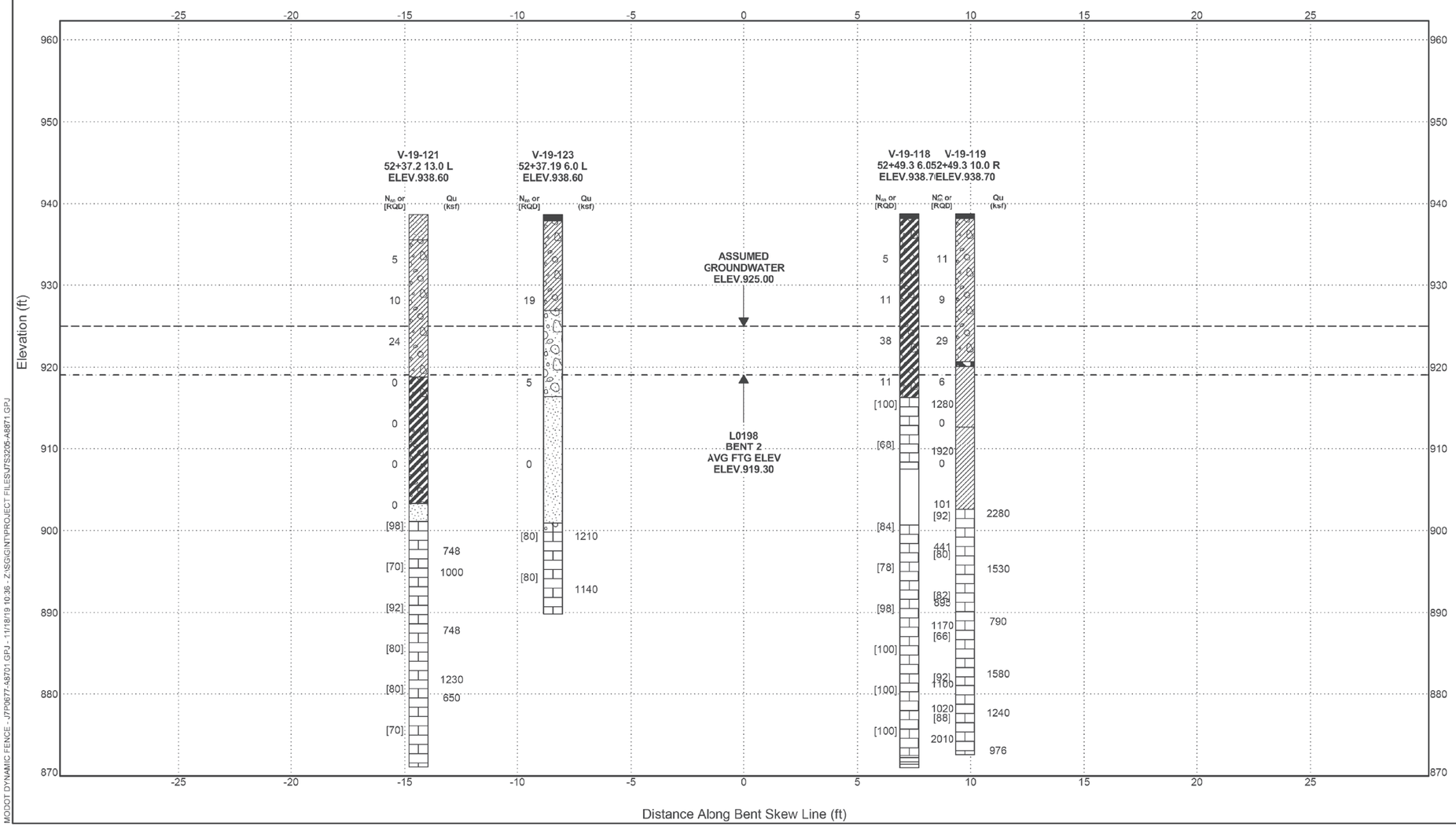

MODOT DYNAMIC FENCE - J7P0677-A8701.GPJ - 11/18/19 10:36 - Z:\SGG\INT\PROJECT FILES\J7S3205-A8871.GPJ

BORING DATA

NOTE: For locations of borings, see Sheet No. 1

Detailed Jan 2020
Checked Jan 2020

Note: This drawing is not to scale. Follow dimensions.

STATE OF MISSOURI
MARK EUGENE DOERFLINGER
NUMBER E-26002
REGISTERED PROFESSIONAL ENGINEER
THIS SHEET HAS BEEN SIGNED, SEALED AND DATED ELECTRONICALLY.

DATE PREPARED	6/11/2020
ROUTE	123
STATE	MO
DISTRICT	BR
SHEET NO.	36
COUNTY	POLK
JOB NO.	J7S3205
CONTRACT ID.	
PROJECT NO.	
BRIDGE NO.	A8871

DESCRIPTION
DATE

MISSOURI HIGHWAYS AND TRANSPORTATION COMMISSION
105 WEST CAPITOL
JEFFERSON CITY, MO 65102
1-888-ASK-MODOT (1-888-275-6636)

IF A SEAL IS PRESENT ON THIS SHEET IT HAS BEEN ELECTRONICALLY SEALED AND DATED.

TREKK DESIGN GROUP, LLC
1411 East 104th St.
Kansas City, MO 64131
Tel (816) 874-4655
Fax (816) 874-4675
www.trekkdesigngroup.com
Missouri Cert. of Authority 2002010300